Product data sheet



IM08-1B5NS-ZT1

IM Standard

INDUCTIVE PROXIMITY SENSORS

SICK
Sensor Intelligence.



Illustration may differ

Ordering information

Type	Part no.
IM08-1B5NS-ZT1	6020220

Other models and accessories ➜ www.sick.com/IM_Standard

Detailed technical data

Features

Housing	Metric
Housing	Standard design
Thread size	M8 x 1
Diameter	Ø 8 mm
Sensing range S_n	1.5 mm
Installation type	Flush
Switching frequency	3,000 Hz
Connection type	Connector M8, 3-pin
Switching output	NPN
Output function	NO
Electrical wiring	DC 3-wire
Enclosure rating	IP67 [1]

[1] According to EN 60529.

Mechanics/electronics

Supply voltage	10 V DC ... 30 V DC
Ripple	≤ 10 %
Voltage drop	≤ 1.2 V [1]
Time delay before availability	≤ 100 ms
Hysteresis	2 % ... 10 %
Reproducibility	≤ 2 % [2] [3]

[1] At I_a max.
[2] Supply voltage U_B and constant ambient temperature Ta.
[3] Of Sr.

Temperature drift (of S_r)	± 10 %
EMC	According to EN 60947-5-2
Continuous current I_a	≤ 200 mA
Short-circuit protection	✓
Power-up pulse protection	✓
Shock and vibration resistance	30 g, 11 ms / 10 ... 55 Hz, 1 mm
Ambient operating temperature	–25 °C ... +70 °C
Housing material	Brass, Nickel-plated brass
Sensing face material	Plastic
Housing length	50 mm
Thread length	35.3 mm
Tightening torque, max.	4 Nm

[1] At I_a max.

[2] Supply voltage U_B and constant ambient temperature Ta.

[3] Of Sr.

Safety-related parameters

$MTTF_D$	152 years
DC_{avg}	0 %

Reduction factors

Stainless steel (V4A, 316L)	0.78
Aluminum (Al)	0.38
Copper (Cu)	0.29
Brass (Br)	0.49

Installation note

Remark	Associated graphic see "Installation"
A	3.25 mm
B	8 mm
C	8 mm
D	4.5 mm
E	0 mm
F	12 mm

Classifications

ECLASS 5.0	27270101
ECLASS 5.1.4	27270101
ECLASS 6.0	27270101
ECLASS 6.2	27270101
ECLASS 7.0	27270101
ECLASS 8.0	27270101
ECLASS 8.1	27270101
ECLASS 9.0	27270101

ECLASS 10.0	27270101
ECLASS 11.0	27270101
ECLASS 12.0	27274001
ETIM 5.0	EC002714
ETIM 6.0	EC002714
ETIM 7.0	EC002714
ETIM 8.0	EC002714
UNSPSC 16.0901	39122230

Installation note

Non-flush installation

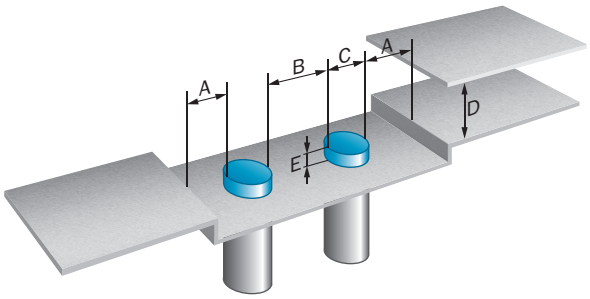

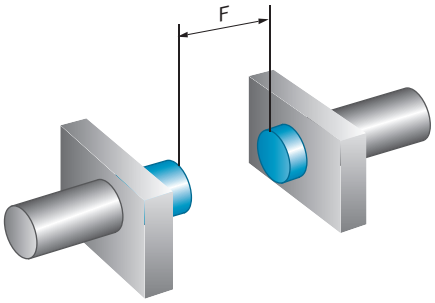

Connection type

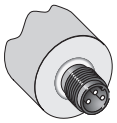

Connection diagram

Cd-002

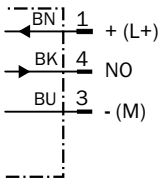

Cd-004

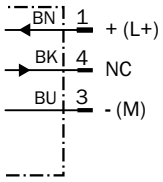

Dimensional drawing (Dimensions in mm (inch))

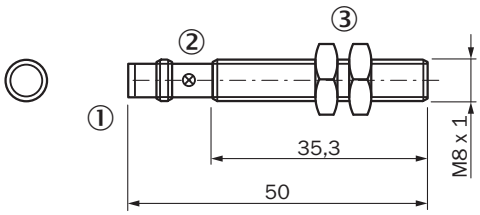

① Connection
② Display LED
③ Fastening nuts (2x); width across 13, metal

Recommended accessories

Other models and accessories ➜ www.sick.com/IM_Standard

	Brief description	Type	Part no.
Mounting brackets and plates			
	Mounting plate for M8 sensors, steel, zinc coated, without mounting hardware	BEF-WG-M08	5321722
	Mounting bracket for M8 sensors, steel, zinc coated, without mounting hardware	BEF-WN-M08	5321721
Terminal and alignment brackets			
	Clamping block for round sensors M8, without fixed stop, plastic (PA12), glass-fiber reinforced, mounting hardware included	BEF-KH-M08	2051477
Others			
	• **Connection type head A:** Female connector, M8, 3-pin, straight, A-coded • **Description:** Unshielded • **Connection systems:** Screw-type terminals • **Permitted cross-section:** 0.14 mm² ... 0.5 mm²	DOS-0803-G	7902077
	• **Connection type head A:** Female connector, M8, 3-pin, angled, A-coded • **Description:** Unshielded • **Connection systems:** Solder connection • **Permitted cross-section:** ≤ 0.25 mm²	DOS-0803-W	7902078
	• **Connection type head A:** Male connector, M8, 3-pin, straight, A-coded • **Description:** Unshielded • **Connection systems:** Screw-type terminals • **Permitted cross-section:** 0.14 mm² ... 0.5 mm²	STE-0803-G	6037322

	Brief description	Type	Part no.
	• **Connection type head A:** Female connector, M8, 3-pin, straight, A-coded • **Connection type head B:** Flying leads • **Signal type:** Sensor/actuator cable • **Cable:** 2 m, 3-wire, PVC • **Description:** Sensor/actuator cable, unshielded • **Application:** Zones with chemicals	YF8U13-020VA1XLEAX	2095860
	• **Connection type head A:** Female connector, M8, 3-pin, straight, A-coded • **Connection type head B:** Flying leads • **Signal type:** Sensor/actuator cable • **Cable:** 5 m, 3-wire, PVC • **Description:** Sensor/actuator cable, unshielded • **Application:** Zones with chemicals	YF8U13-050VA1XLEAX	2095884
	• **Connection type head A:** Female connector, M8, 3-pin, angled, A-coded • **Connection type head B:** Flying leads • **Signal type:** Sensor/actuator cable • **Cable:** 2 m, 3-wire, PVC • **Description:** Sensor/actuator cable, unshielded • **Application:** Zones with chemicals	YG8U13-020VA1XLEAX	2096165
	• **Connection type head A:** Female connector, M8, 3-pin, angled, A-coded • **Connection type head B:** Flying leads • **Signal type:** Sensor/actuator cable • **Cable:** 5 m, 3-wire, PVC • **Description:** Sensor/actuator cable, unshielded • **Application:** Zones with chemicals	YG8U13-050VA1XLEAX	2096166

SICK AT A GLANCE

SICK is one of the leading manufacturers of intelligent sensors and sensor solutions for industrial applications. A unique range of products and services creates the perfect basis for controlling processes securely and efficiently, protecting individuals from accidents and preventing damage to the environment.

We have extensive experience in a wide range of industries and understand their processes and requirements. With intelligent sensors, we can deliver exactly what our customers need. In application centers in Europe, Asia and North America, system solutions are tested and optimized in accordance with customer specifications. All this makes us a reliable supplier and development partner.

Comprehensive services complete our offering: SICK LifeTime Services provide support throughout the machine life cycle and ensure safety and productivity.

For us, that is “Sensor Intelligence.”

WORLDWIDE PRESENCE:

Contacts and other locations –www.sick.com