CUI Devices is now Same Sky! Learn More



# SERIES: AMT24 | DESCRIPTION: MODULAR ABSOLUTE ENCODER

## FEATURES

- high speed protocol for fast low latency position data
- patented capacitive ASIC technology
- low power consumption
- 12 or 14-bit absolute position with multi-turn capability
- half-duplex RS485 - high speed 2 Mbps or adjustable data rate
- settable zero position
- configuration and programming via AMT Viewpoint™ software
- compact modular package with locking hub for ease of installation
- radial and axial cable connections
- -40 ~ 105°C operating temperature

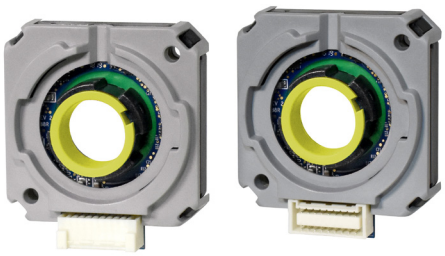

RoHS

## ELECTRICAL

| parameter | conditions/description | min | typ | max | units |
|---|---|---|---|---|---|
| power supply | VDD | 3.8 | 5 | 5.5 | V |
| start-up time[1] | | | 200 | | ms |
| current consumption | with unloaded output | | 16 | | mA |

Note: 1. Encoder must be stationary during start-up.

## ABSOLUTE POSITION CHARACTERISTICS

| parameter | conditions/description | min | typ | max | units |
|---|---|---|---|---|---|
| resolution | 12 or 14-bit | | | | |
| accuracy | | | 0.2 | | degrees |
| absolute zero position | settable via AMT Viewpoint™ GUI or RS485 (single-turn versions only) | | | | |
| multi-turn | multi-turn and single-turn versions available | | | | |
| turns counter[2] | signed binary number | | 14 | | bits |
| absolute position update rate | 12-bit<br>14-bit | | 25<br>100 | | µs<br>µs |

Notes: 2. Multi-turn encoders only.

## MECHANICAL

| parameter | conditions/description | min | typ | max | units |
|---|---|---|---|---|---|
| motor shaft length | | 13.5 | | | mm |
| motor shaft tolerance | | | NOM +0/-0.015 | | mm |
| weight | | | 26 | | g |
| axial play | | | | ±0.3 | mm |
| hub set screw to shaft torque | set screw size: M2.5x0.45 | | 3 | | in-lb |
| rotational speed at each resolution | 12-bit position resolution<br>14-bit position resolution | | | 8,000<br>4,000 | RPM<br>RPM |

## ENVIRONMENTAL

| parameter | conditions/description | min | typ | max | units |
|---|---|---|---|---|---|
| operating temperature | | -40 | | 105 | °C |
| humidity | non-condensing | | | 85 | % |
| vibration | 10~500 Hz, 5 minute sweep, 2 hours on each XYZ | | | 5 | G |
| shock | 3 pulses, 6 ms, 3 on each XYZ | | | 200 | G |
| RoHS | yes | | | | |
| REACH | EC 1907/2006 | | | | |

## RS485 INTERFACE

| parameter | conditions/description | min | typ | max | units |
|---|---|---|---|---|---|
| protocol | RS485 balanced digital multi-port interface | | | | |
| data rate[3,4] | 8 data bits, no parity, 1 stop bit, asynchronous<br>2 Mbps<br>115,200; 38,400; 19,200; 9,600 bps | | | | |
| transceiver | Texas Instruments THVD1424 | | | | |
| turnaround time | time before encoder responds with position<br>2 Mbps<br>115,200 bps<br>38,400 bps<br>19,200 bps<br>9,600 bps | <br>3<br>10.8<br>30<br>56<br>110 | | | <br>µs<br>µs<br>µs<br>µs<br>µs |
| driver differential output voltage magnitude | load resistance = 54 Ω | 1.5 | 2 | 3.3 | V |

Notes: 3. Data rate configured with AMT Viewpoint™
4. Default data rate on kits is 2 Mbps.

### Checksum

The AMT24 encoder uses a checksum calculation for detecting transmission errors. The upper two bits of every response from the encoder are check bits. Those values are shown in the examples below as K1 and K0. The check bits are odd parity; K1 for the odd bits in the response, and K0 for the even bits in the response. These check bits are not part of the position, but are used to verify its validity. The remaining lower 14 bits are the useful data. Here is an example of how to calculate the checkbits for a 16-bit response, from a 14-bit encoder.

Full response: 0x61AB
14-bit position: 0x21AB (8619 decimal)

### Checkbit Formula

Odd: K1 = !(H5^H3^H1^L7^L5^L3^L1)

Even: K0 = !(H4^H2^H0^L6^L4^L2^L0)

From the above response 0x61AB:
Odd: 0 = !(1^0^0^1^1^1^1) = correct
Even: 1 = !(0^0^1^0^0^0^1) = correct

# RS485 INTERFACE (CONTINUED)

**Addressing**

The AMT24 encoder supports multiple encoders on the RS485 bus. This is accomplished by giving each encoder a unique node address. This node address is 8 bits long but the low two bits must be 0. Therefore, the encoder can have any single byte value that is divisible by 4 which allows up to 64 encoders to share the bus.

By default, the node address is 0x54. Node addresses configurable via AMT Viewpoint™ or set at factory for specific configuration upon request.

| Available RS485 Node Addresses (HEX) | | | | | | | |
|---|---|---|---|---|---|---|---|
| 00 | 20 | 40 | 60 | 80 | A0 | C0 | E0 |
| 04 | 24 | 44 | 64 | 84 | A4 | C4 | E4 |
| 08 | 28 | 48 | 68 | 88 | A8 | C8 | E8 |
| 0C | 2C | 4C | 6C | 8C | AC | CC | EC |
| 10 | 30 | 50 | 70 | 90 | B0 | D0 | F0 |
| 14 | 34 | **54*** | 74 | 94 | B4 | D4 | F4 |
| 18 | 38 | 58 | 78 | 98 | B8 | D8 | F8 |
| 1C | 3C | 5C | 7C | 9C | BC | DC | FC |

*Default address

The node address serves also as the read position command which is why it will be referred to it as the base command. When the encoder sees a command on the RS485 it reads the first 6 bits to determine if it should be listening. If it sees its address, then it interprets the low two bits for the command.

| Low two bits | Hex | Command |
|---|---|---|
| 00 | 0x00 | Read position |
| 01 | 0x01 | Read turns counter (multi-turn encoders only) |
| 10 | 0x02 | Set zero position |
| 11 | 0x03 | Reset encoder |

For example, with the default encoder address (0x54), the following commands are available:

| Byte | Command |
|---|---|
| 0x54 | Read position |
| 0x55 | Read turns counter (multi-turn encoders only) |
| 0x56 | Set zero position |
| 0x57 | Reset encoder |

## RS485 INTERFACE EXAMPLES

**Single character commands**

Read Position: <node_address>

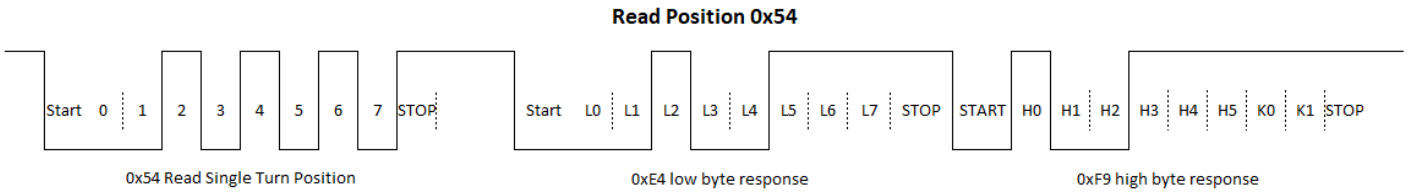


The read position command is the same as the node address which has a default value of 0x54 is sent and the response is received with the low byte first. After removing the checksum the result is 0x39E4. For a 14-bit encoder nothing else is required, the position is 14820 in decimal. However if this is a 12-bit encoder, the position must be shifted to the right 2 bits to throw away the low bits of the response. Therefore the position would be 3705 in decimal.

Read Turns (multi-turn encoders only): <node_address + 0x01>

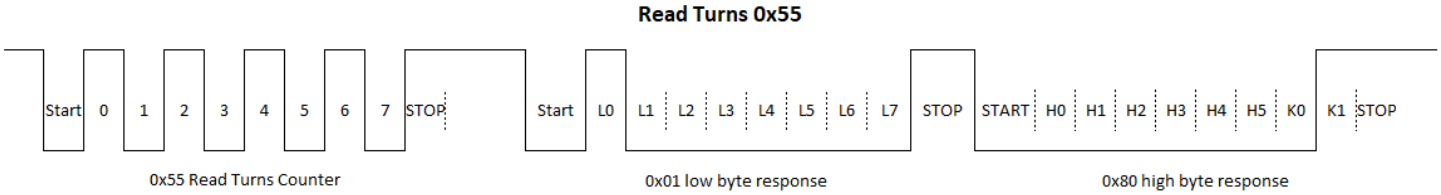


The turns counter command is <node_address + 0x01>. By default the turns counter command is 0x55. The encoder responds with the low byte first and includes check bits same as the read position command. The resulting number is a signed 14 bit number. The response above is showing 1 turn. This value is not retained between power cycles. After a power cycle, the value is reset to zero. The turn counter value is associated with the last read-position command. This ensures that the value does not change between commands. First, perform a position-read command, as shown above. Then read the turns counter.

Set Zero Position (single turn encoders only): <node_address + 0x02>

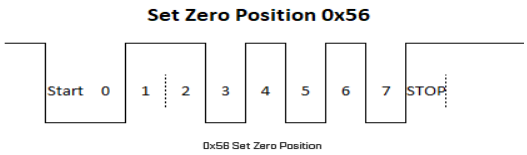


The zero set command is <node_address + 0x02>. By default we send 0x56. The encoder zero's the position and immediately resets.

Encoder Reset: <node_address + 0x03>

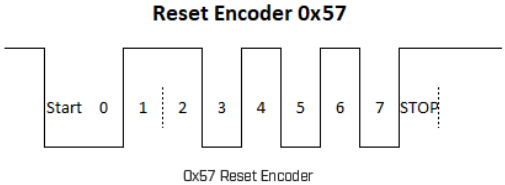


The reset command is <node_address + 0x03>. By default the command to reset the encoder is 0x57. The encoder performs and immediate reset.

## PART NUMBER KEY

For customers that prefer a specific AMT24 configuration, please reference the custom configuration key below.

**AMT24 X X - XX - XXXX - X**

- Base Number
- Orientation: 2 = Radial, 3 = Axial
- Absolute Resolution: A = 12-bit single-turn, B = 14-bit single-turn, C = 12-bit multi-turn, D = 14-bit multi-turn
- RS485 Node Address: 54 = Default node address, XX = *Node address options
- Bore Diameter: 9000 = 9 mm, 9525 = 3/8'', 1000 = 10 mm, 1100 = 11 mm, 1200 = 12 mm, 1270 = 1/2”, 1300 = 13 mm, 1400 = 14 mm, 1500** = 15 mm, 1587 = 5/8”
- Mounting Base: S = Standard, W*** = Wide

*Reference RS485 Interface Addressing section on page 3 for help selecting node address.
**15 mm bore diameter option only available as custom configuration.
***Wide base not included in kits.

## AMT24-V KITS

In order to provide maximum flexibility for our customers, the AMT24 series is provided in kit form standard. This allows the user to implement the encoder into a range of applications using one sku#, reducing engineering and inventory costs. AMT24 kit includes all items shown below.

### ORDERING GUIDE

**AMT24XX-V**

- Orientation: 2 = Radial, 3 = Axial
- Absolute Resolution: A = 12-bit single-turn, B = 14-bit single-turn, C = 12-bit multi-turn, D = 14-bit multi-turn

| SHAFT ADAPTERS | | | | | | | |
|---|---|---|---|---|---|---|---|
| 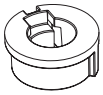 | 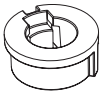 | 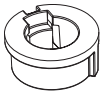 | 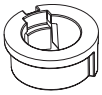 | 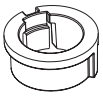 | 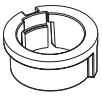 | 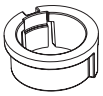 |  |
| 9 mm | 3/8 in | 10 mm | 11 mm | 12 mm | 1/2 in | 13 mm | 14 mm |
| Light Blue | Orange | Purple | Gray | Yellow | Green | Red | Blue |

| AMT24 | ALIGNMENT TOOL* | PLACEMENT TOOL | ALLEN WRENCH |
|---|---|---|---|
| 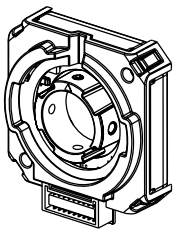 Shaft adapter is not needed for 5/8" shaft | 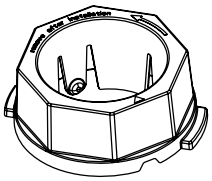 | 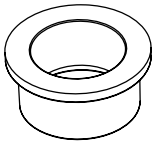 |  |

*Alignment Tool comes pre-installed on all AMT24 Series.

## ENCODER INTERFACE

| CONNECTOR PINOUT | |
|---|---|
| **#** | **Function** |
| 1[1] | NC |
| 2[1] | NC |
| 3 | A |
| 4 | B |
| 5[1] | NC |
| 6[1] | NC |
| 7 | GND |
| 8 | +5 V |

**AMT242**

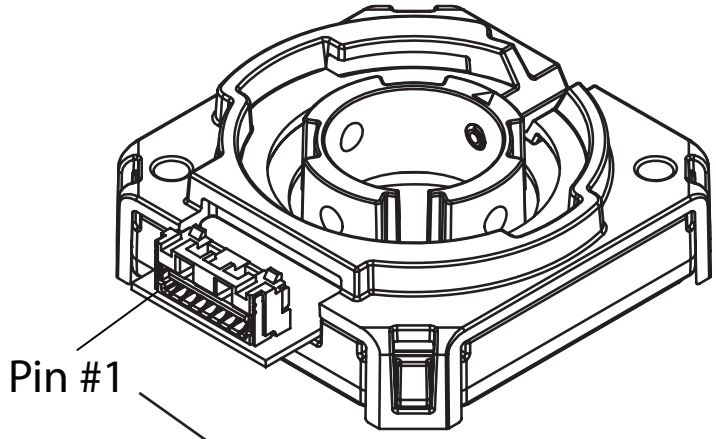


**AMT243**

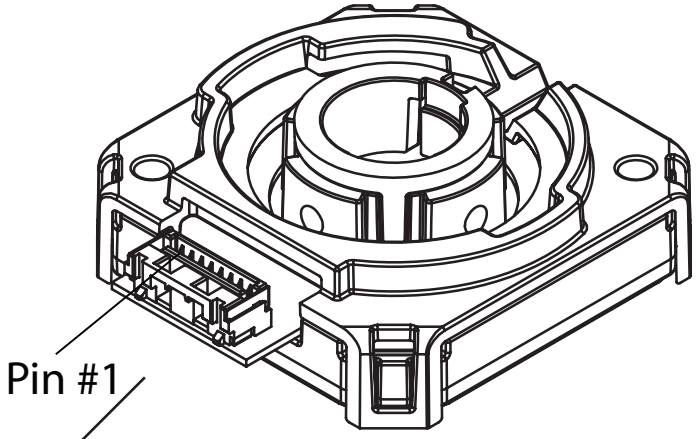


Mating Connector:
Molex 502380-0800

Notes:
1. Pins 1, 2, 5, & 6 are used for configuration only and should be left disconnected for RS485.
2. Compatible with prototype cable AMT-08C-3-036 and programming cable AMT-PGRM-08C-1.

## MECHANICAL DRAWING

units: mm
tolerance:
X.XX ±0.25 mm
hole dia: ±0.08 mm

**AMT242**

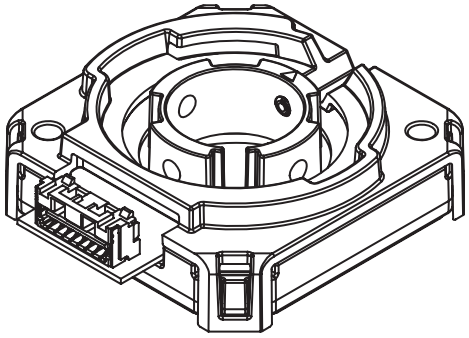

**AMT243**

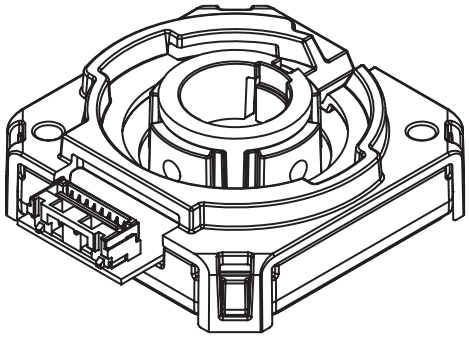

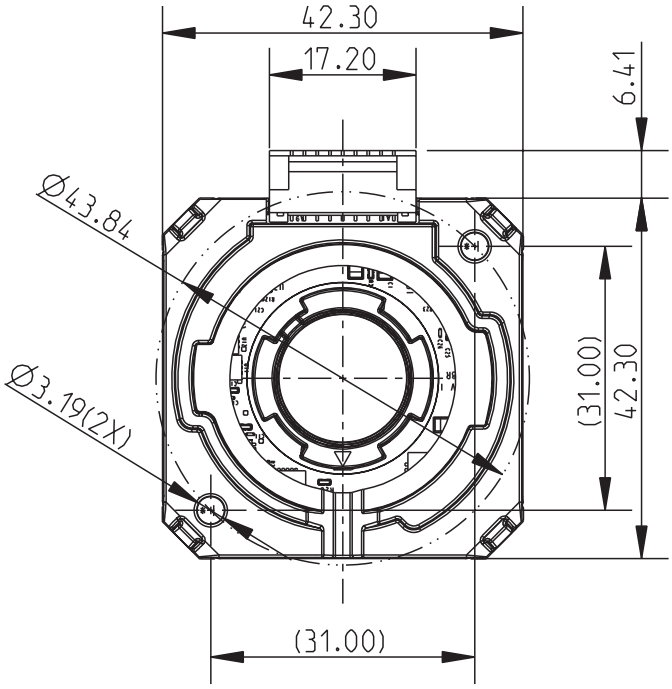


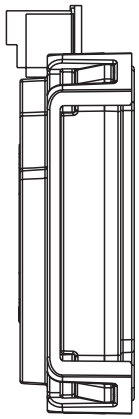

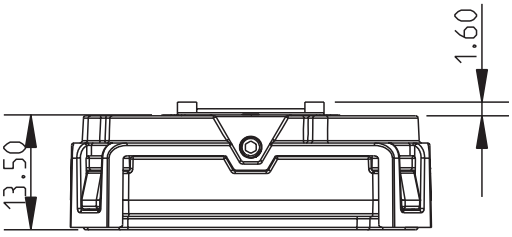


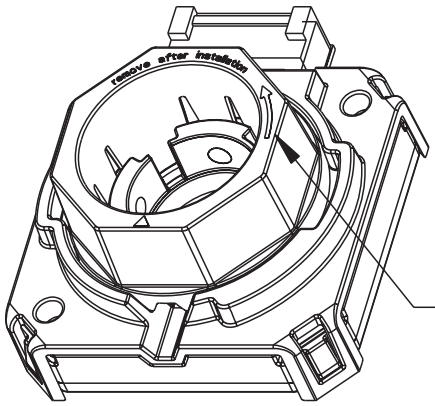


ALIGNMENT TOOL TO BE REMOVED AFTER INSTALLATION

## MECHANICAL DRAWING (WIDE BASE)

units: mm
tolerance:
X.XX ±0.25 mm
hole dia: ±0.08 mm

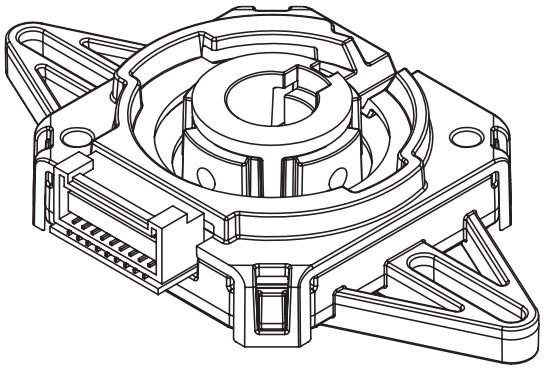

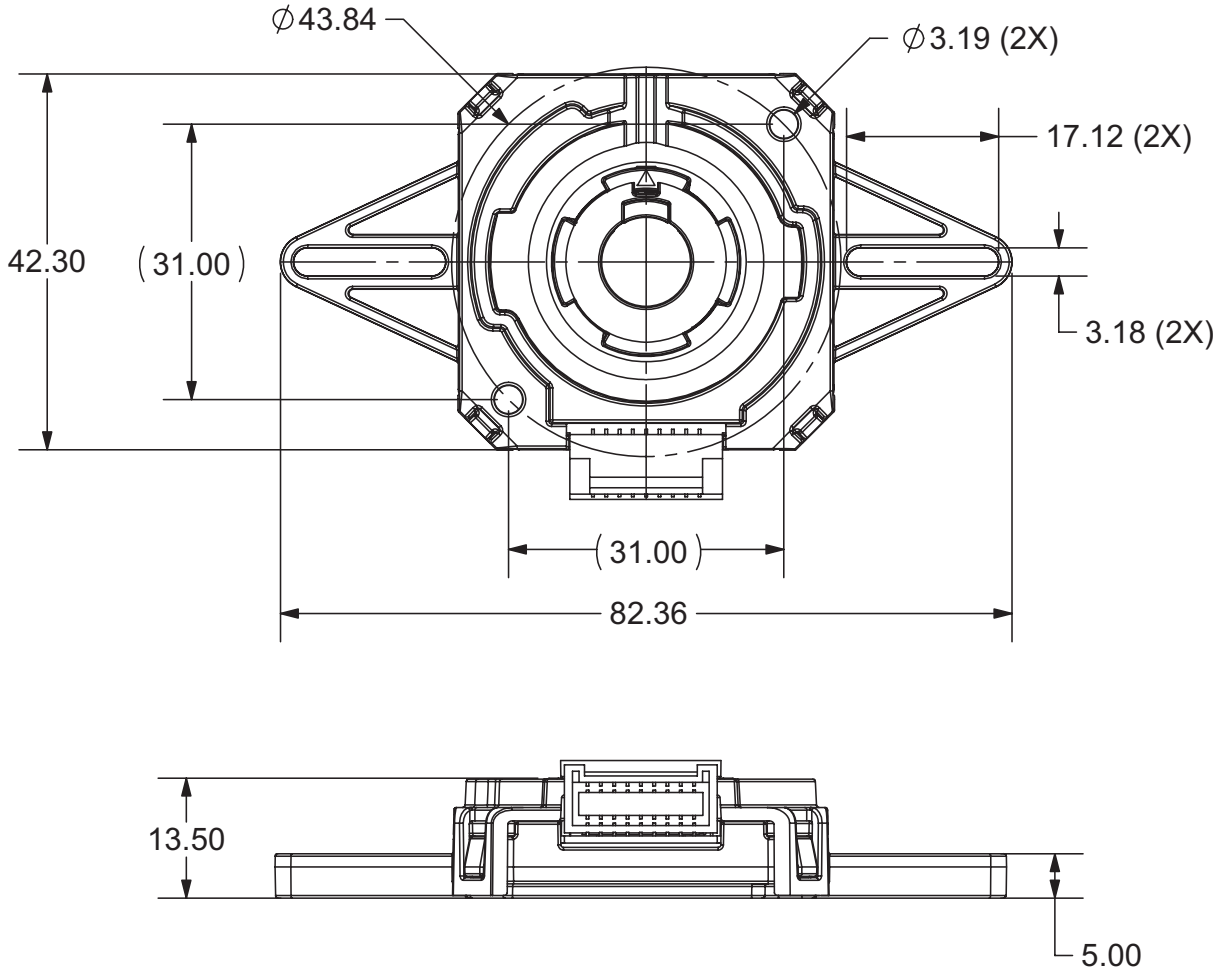

# ASSEMBLY PROCEDURE

## STEP 1

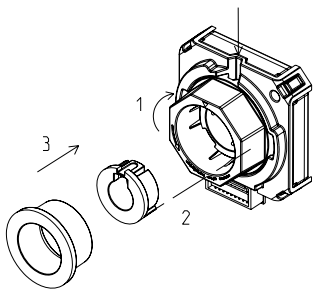


1. Begin by rotating the pre-installed alignment tool clockwise and completely to the right so that the pre-installed shaft set screw is visible.
2. Select the appropriately sized shaft adapter and insert it into the encoder making sure the adapter is properly aligned with the keyway in the metal hub. No adapter is needed for a 5/8" motor shaft.
3. Select the placement tool and insert it into the encoder. This placement tool holds the encoder's hub and shaft adapter in the proper position for installation onto the motor shaft.

## STEP 2

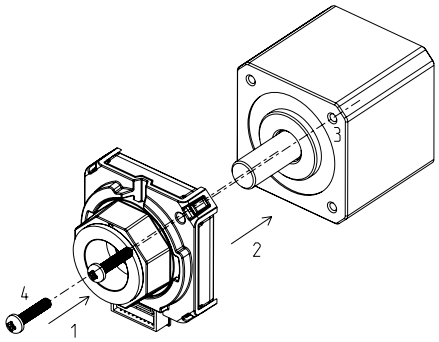


1. Slide the encoder onto the motor shaft applying force only to the placement tool to maintain proper alignment of the encoder's hub and shaft adapter.
2. Press until the encoder sits flush with the motor body.
3. Once in contact with the motor body, rotate the encoder until the mounting holes are aligned with the proper bolt circle.
4. Insert screws and fasten the encoder to the motor.

## STEP 3

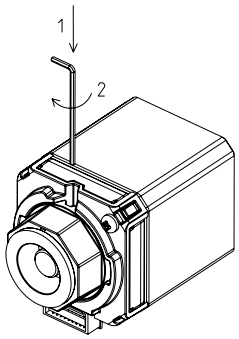


1. Insert the Allen Wrench into the notch on the top.
2. Tighten the shaft set screw to the recommended torque settings per the spec.

## STEP 4

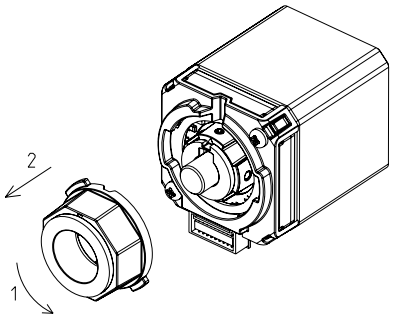


1. Rotate the placement tool and alignment tool counterclockwise until the tabs align with the openings.
2. Remove both tools from the encoder.
3. When installation is finished, the motor shaft should be rotating freely.

## REVISION HISTORY

| rev. | description | date |
|---|---|---|
| 1.0 | initial release | 11/03/2023 |
| 1.01 | updated datasheet | 04/04/2024 |
| 1.02 | CUI Devices rebranded to Same Sky | 09/12/2024 |

The revision history provided is for informational purposes only and is believed to be accurate.

Same Sky offers a one (1) year limited warranty. Complete warranty information is listed on our website.

Same Sky reserves the right to make changes to the product at any time without notice. Information provided by Same Sky is believed to be accurate and reliable. However, no responsibility is assumed by Same Sky for its use, nor for any infringements of patents or other rights of third parties which may result from its use.

Same Sky products are not authorized or warranted for use as critical components in equipment that requires an extremely high level of reliability. A critical component is any component of a life support device or system whose failure to perform can be reasonably expected to cause the failure of the life support device or system, or to affect its safety or effectiveness.

# Unikeyic Electronics

Global Electronic Components Distributor

Click to view pricing, inventory, delivery, and lifecycle information:

## Same Sky:

CBT-09427-SMT-TR CMC-5042PF-AC SJ-2523-SMT-TR CFM-2507CF-0140-313 CMA-4544PF-W
PJ-202AH CDM1222-12A-FW-F16-050-67 CMM-2718AT-42316-TR CMP-5247TF-K CPM-2H
DS04-254-2-02BK-SMT TBP02P1-381-10BE UJ32-C-H-G-L1-MSMT-TR PJ-067B TB007-508-02BE
CFM-6015V-239-292-20 CMI-9653S-SMT-TR SJ-43516-SMT-TR-PI TBL004V-508-02BE-2GY
CPI-1375IC-80T CPT-1117-83-SMT-TR DS01C-254-S-03BE SJ1-3535N TBP01R1-508-14BE
HSE-B20350-NP PJ-058AH PR4-5V-450-1A CFM-2510B-0130-275 CFM-A238BF-270-651 PJ-047BH