标 记 MARK	ECN编号/变更内容 ECN NO/DEFINITION	修 改 REVISE	日 期 DATE	核 准 APPROVE

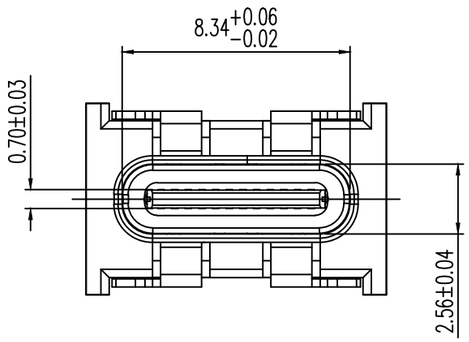

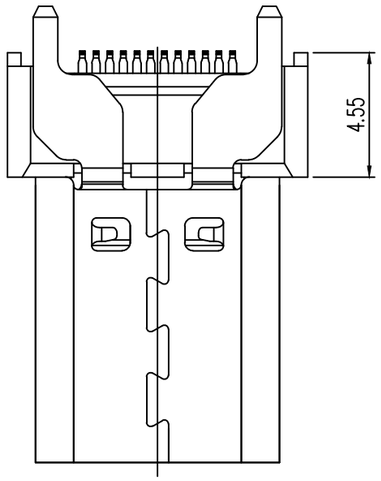

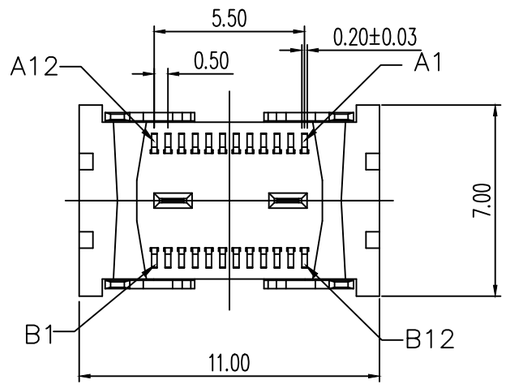

PIN NUMBER	SIGNAL NAME	PIN NUMBER	SIGNAL NAME
A1	GND	B12	GND
A2	SSTXp1	B11	SSRXp1
A3	SSTXn1	B10	SSRXn1
A4	VBUS	B9	VBUS
A5	CC1	B8	SBU2
A6	Dp1	B7	Dn2
A7	Dn1	B6	Dp2
A8	SBU1	B5	CC2
A9	VBUS	B4	VBUS
A10	SSRXn2	B3	SSTXn2
A11	SSRXp2	B2	SSTXp2
A12	GND	B1	GND

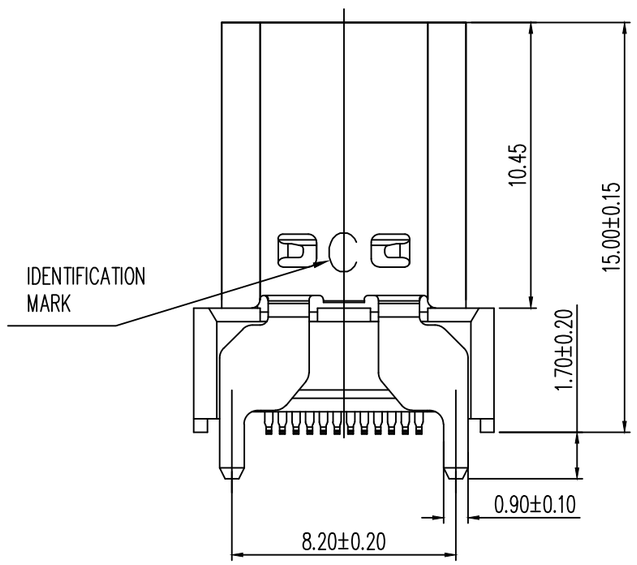

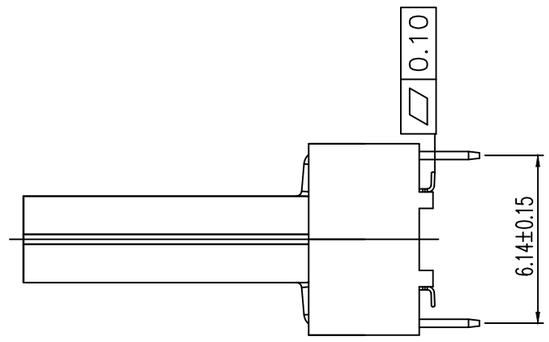

NOTE:
1.Contact Resistance:40mOHM Max.;
2.Dielectric Withstanding Voltage:
100V AC For 1 Minute;
3.Insulation Resistance:100M OHM Min.;
4.Mating And Unmating Force:
Mating Force: 5~20N
Unmating Force: 8~20N;
6~20N AFTER TEST;
5.Durability:10000 Cycles;

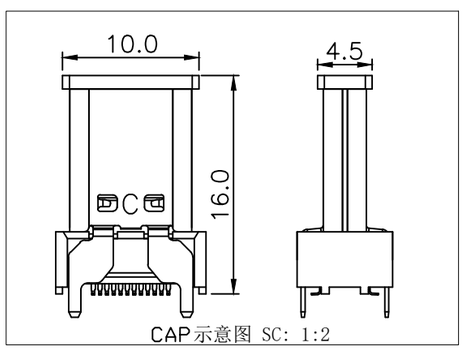

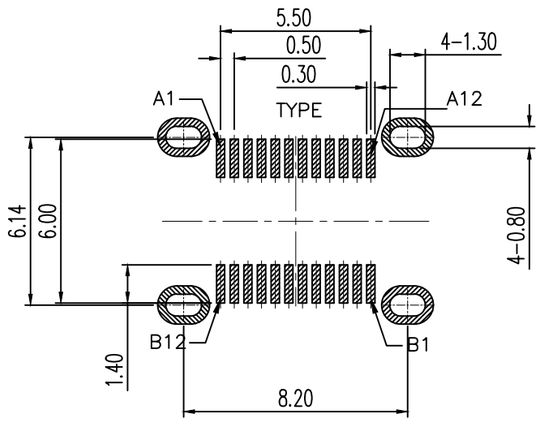

RECOMMEND P.C.B LAYOUT(COMPONENT SIDE)

TOLERANCE FOR PCB LAYOUT IS ± 0.05

序 号	品 名	材 质	电镀/颜色	备 注
3	外壳	不锈钢	镀镍	
2	接触	铜	镀金	
1	基座	LCP	黑色	

深圳市虹成电子有限公司		品 名 TITLE	TYPE-C母座		
		料 号 PART NO	HC-TYPE-C-24P-LT038C		
GENERAL TOLERANCES (UNLESS SPECIFIED)		比 列 SCALE	1:1		
±0.30	X.° ±2°	单 位 UNIT	MM	制 图 DRAW	AhYe
±0.20	.X° ±1°	张 数 PART NO	1 OF 1	审 核 CHECKED	夏操云
±0.15	.XX°	版 本 REV	A	批 准 APPROVE	赵亮亮
.XXX ±0.05	.XXX°				

Unikeyic Electronics

Global Electronic Components Distributor

Click to view pricing, inventory, delivery, and lifecycle information:

HC:

HCZZ0514-6 HC-PHB2.0-2x5A HC-PZ254-11.5L-2x18PZ HC-PZ254-13.8L-1x6PWA HC-USB3.0-C26 HC-USB3.0-L175-2X1-J HC-USB3.0-L257-J HCZZ0530-4 HC-USB3.0-C34-P HCZZ0576-5 HC-FPC-0.5-24P-FH20 HC-PM200-4.3H-2x20PZ HC-USB2.0-L100-093P HCZZ0032-6 HCZZ0451-6 HC-PHB2.0-2x4AW HC-PM254-5.0H-2x10PZ HC-PM254-8.5H-1x21PZ HC-PZ254-11.5L-1x10PZ HC-PZ254-11.5L-1x20PZ HCZZ0001-2 HCZZ0451-4 HC-FPC-0.5-40P-FH20 HC-FPC-0.5-6P-CSH20 HC-FPC-0.5-10P-FH20 HC-PM200-4.3H-2x8PS HC-PM254-8.5H-2x20PS HC-PZ127-7.2L-2x3PS HC-FPC-0.5-50P-FHH20 HCZZ0001-6