Description：

This N-Channel MOSFET uses advanced trench technology and design to provide excellent $R_{DS(on)}$ with low gate charge.

It can be used in a wide variety of applications.



Features：

1) V_{DS}=100V,I_D=15A,$R_{DS(ON)}$<100m Ω @V_{GS}=10V
2) Low gate charge.
3) Green device available.
4) Advanced high cell denity trench technology for ultra low $R_{DS(ON)}$.
5) Excellent package for good heat dissipation.

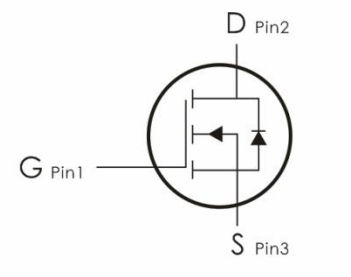

Package Marking and Ordering Information：

Part NO.	Marking	Package	Packing
DMN10H170SK3-13	AKMic	TO- 252	2500 pcs/Reel

Thermal Characteristics：

Symbol	Parameter	Max	Units
$R_{\theta JC}$	Thermal Resistance,Junction to Case	2.7	℃/W

Absolute Maximum Ratings：(T_C=25℃ unless otherwise noted)

Symbol	Parameter	Ratings	Units
V_{DS}	Drain-Source Voltage	100	V
V_{GS}	Gate-Source Voltage	±20	V
I_D	Continuous Drain Curren	15	A
	Continuous Drain Current-T_C=100℃	9	
I_{DM}	Pulsed Drain Current[1]	60	
P_D	Power Dissipation	46	W
E_{AS}	Single pulse avalanche energy[2]	20	mJ
T_J, T_{STG}	Operating and Storage Junction Temperature Range	-55-+150	℃

Electrical Characteristics: (T_C=25℃ unless otherwise noted)

Symbol	Parameter	Conditions	Min	Typ	Max	Units
Off Characteristics						
BV_{DSS}	Drain-Sourtce Breakdown Voltage	V_{GS}=0V,I_D=250μA	100	---	---	V
I_{DSS}	Zero Gate Voltage Drain Current	V_{GS}=0V, V_{DS}=100V	---	---	1	μA
I_{GSS}	Gate-Source Leakage Current	V_{GS}=±20V, V_{DS}=0A	---	---	±100	nA
On Characteristics						
$V_{GS(th)}$	GATE-Source Threshold Voltage	V_{GS}=V_{DS}, I_D=250μA	1.2	1.8	2.4	V
$R_{DS(ON)}$	Drain-Source On Resistance[3]	V_{GS}=10V,I_D=10A	---	75	100	mΩ
		V_{GS}=4.5V,I_D=8A	---	85	110	mΩ
Dynamic Characteristics						
C_{iss}	Input Capacitance	V_{DS}=25V, V_{GS}=0V, f=1MHz	---	1083	---	pF
C_{oss}	Output Capacitance		---	51	--	
C_{rss}	Reverse Transfer Capacitance		---	40	---	
Switching Characteristics						
$t_{d(on)}$	Turn-On Delay Time	V_{DS}=50V, I_D=10A, R_{ENG}=3Ω ,V_{GS}=10V	---	13	---	ns
t_r	Rise Time		---	5.4	---	ns
$t_{d(off)}$	Turn-Off Delay Time		---	27	---	ns
t_f	Fall Time		---	5.1	---	ns
Q_{gs}	Total Gate Charge	V_{GS}=10V, V_{DS}=50V, I_D=10A	---	21	---	nc
Q_{gd}	Gate-Source Charge		---	2	---	nc
Q_g	Gate-Drain “Miller” Charge		---	6	---	nc
Drain-Source Diode Characteristics						
V_{SD}	Diode Forward Voltage	V_{GS}=0V, I_{SD}=15A	---	---	1.2	V
I_S	Continuous Drain Curren	VD=VG=0V	---	---	15	A
I_{SM}	Pulsed Drain Current		---	---	60	A
Trr	Reverse Recovery Time	I_F=10A,T_J=25℃ dI/dt=100A/us	---	30	---	ns
Qrr	Reverse Recovery Charge		---	42	---	nc

Notes:

1. Repetitive Rating: Pulse Width Limited by Maximum Junction Temperature.
2. EAS condition: Starting TJ=25C, VDD=50V, VG=10V, RG=25ohm, L=0.5mH, IAS=9A
3. Pulse Test: Pulse Width≤300μs, Duty Cycle≤0.5%.

Typical Characteristics: (T_C=25℃ unless otherwise noted)

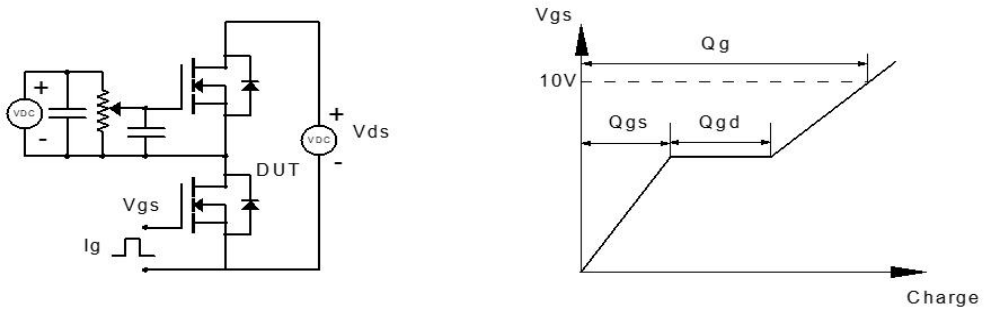

Figure 1: Gate Charge Test Circuit & Waveform

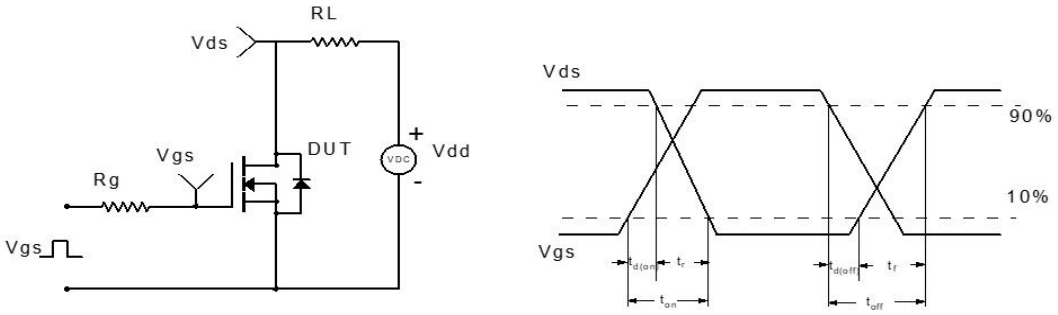

Figure 2: Resistive Switching Test Circuit & Waveform

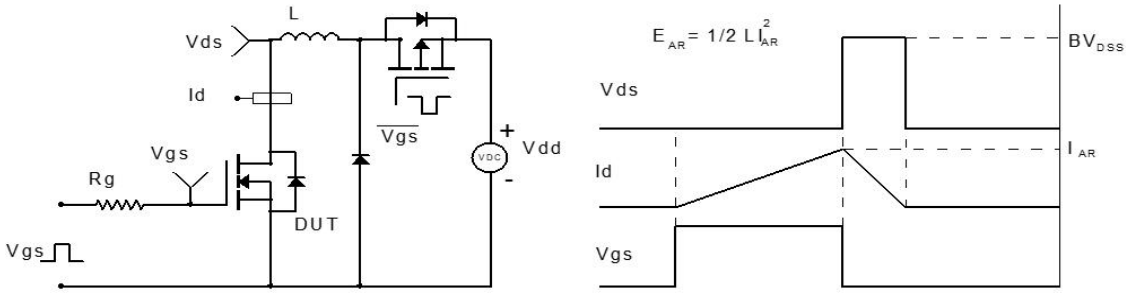

Figure 3: Unclamped Inductive Switching Test Circuit& Waveform

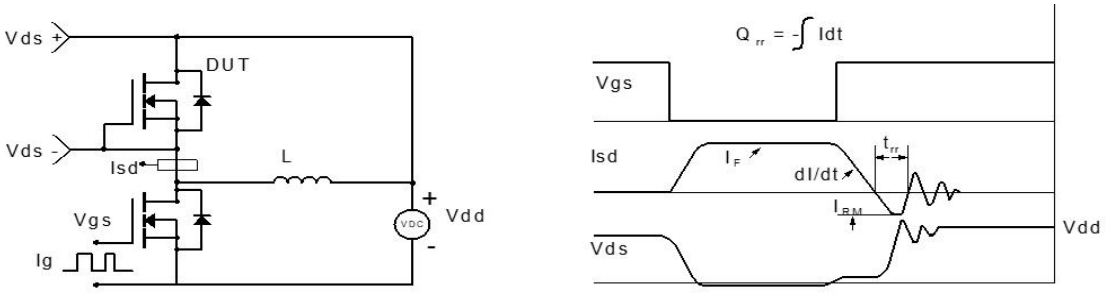

Figure 4: Diode Recovery Test Circuit & Waveform

TO-252 Package Information

Package Outline Type-A

UNIT: mm

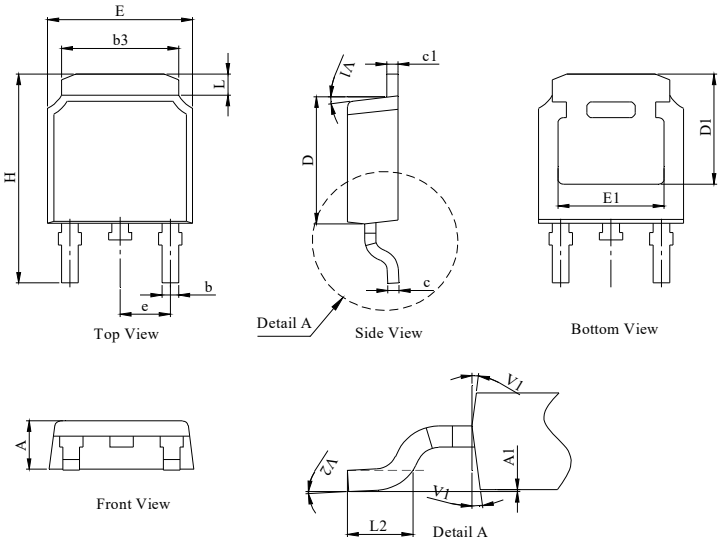

DIM.	MILLIMETER		
	MIN.	NOM.	MAX.
A	2.18	2.30	2.39
A1	0	--	0.13
b	0.64	0.76	0.89
c	0.40	0.50	0.61
c1	0.46	0.50	0.58
D	5.97	6.10	6.23
D1	5.05	--	--
E	6.35	6.60	6.73
E1	4.32	--	--
b3	5.21	5.38	5.55
e	2.29 BSC		
H	9.40	10.00	10.40
L	0.89	--	1.27
L2	1.40	--	1.78
V1	7° REF		
V2	0°	--	6°

Package Outline Type-B

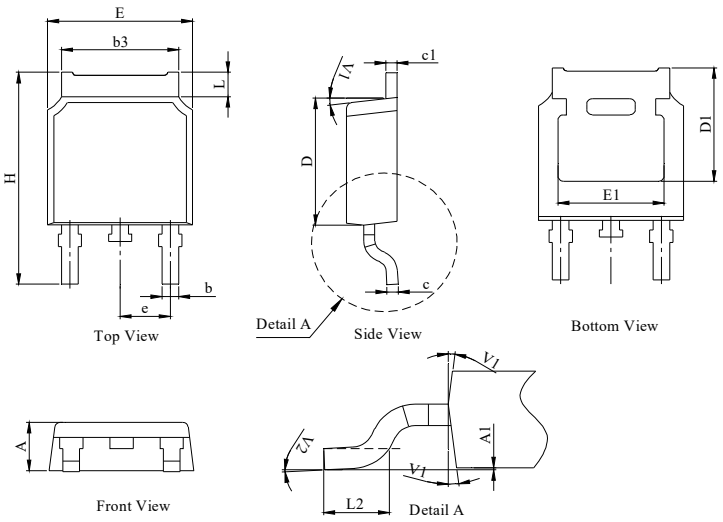

DIM.	MILLIMETER		
	MIN.	NOM.	MAX.
A	2.10	2.30	2.40
A1	0	--	0.13
b	0.66	0.76	0.86
b3	5.21	5.38	5.55
c	0.40	0.50	0.60
c1	0.44	0.50	0.58
D	5.90	6.10	6.30
D1	5.30REF		
E	6.40	6.60	6.80
E1	4.63	-	-
e	2.29 BSC		
H	9.50	10.00	10.70
L	1.09	--	1.21
L2	1.35	--	1.65
V1	7° REF		
V2	0°	--	6°

Recommended Soldering Footprint

