CND-tek
磁联达

B1202D

10/100M Single Port Transformer Module

EN

1. Compatible with various 10/100 Base-TX transceiver requiring 1:1 transmit and receive turns ratio
2. Compliant with IEEE 802.3 standard including baseline wander compensation specification of 350μH OCL when Biased at 8mA
3. Single channel interface for 10/100Mbps Ethernet applications with CMC's tuned to Enhance EMC system performance
4. Availiable in Through Hole package.
5. Operating Temperature range: 0℃ TO +70℃
6. Storage temperature range: -25℃ TO +125℃



DIMENSIONS & SCHEMATICS

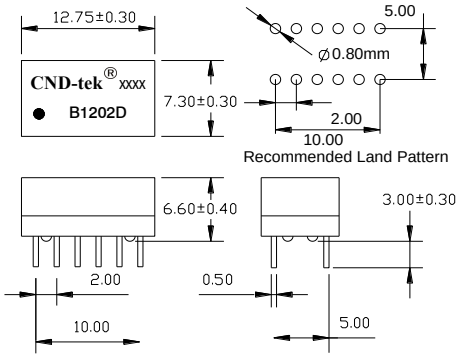

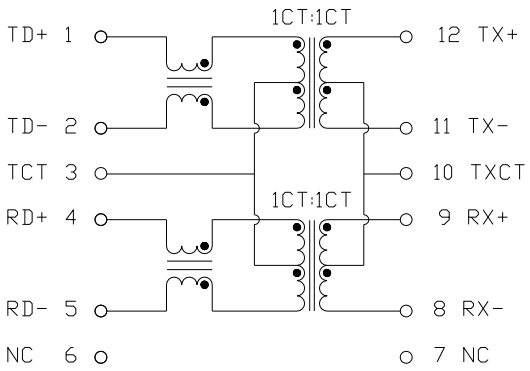

Note：1、Dimension：mm, 2.Unless otherwise specified,tolerances are: ±0.15mm

TECHNICAL SPECIFICATIONS

OCL :	350 μH Min. @ 100 KHz, 100mV with 8mA DC Bias
Leakage Inductance:	0.5 μH Max. @ 100KHz, 0.1V
Cw/w:	28F Max. @ 100KHz, 0.1V
DCR:	1.20Ω Max.
Turns Ratio(±5%):	1CT:1(TX), 1CT:1(RX)
Polarity:	1-12, 4-9 In-Phase
Insertion Loss:	-1.1 dB Max. (TX & RX)@ 1-100 MHz
Return Loss:	-18 dB Min @ 0.5-30MHz
	-15 dB Min @ 40 MHz
	-13 dB Min @ 60 MHz
	-11 dB Min @ 80 MHz
	-10 dB Min.@ 100 MHz
Cross Talk:	-45 dB Min.@ 30 MHz
	-40 dB Min.@ 60 MHz
	-35 dB Min.@ 100 MHz
Common Mode Rejection :	-43 dB Min.@ 1-30 MHz
	-37 dB Min.@ 60 MHz
	-33 dB Min.@ 80-100 MHz
Isolation HI-POT:	1500Vrms 1mA 1Second

PACKING SPECIFICATION

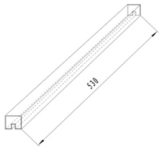

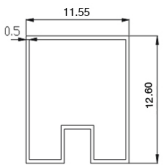

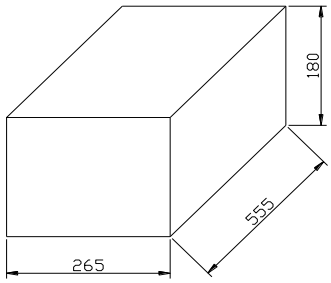

1. units/reel:40PCS
2 reel/carton:280PCS
3.units/carton :11200PCS