http://hcdz2017.com/

标 记 MARK	ECN编号/变更内容 ECN NO/DEFINITION	修 改 REVISE	日 期 DATE	核 准 APPROVE

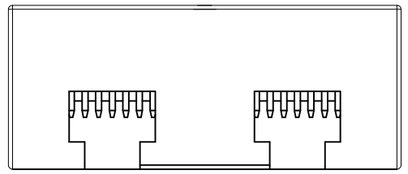

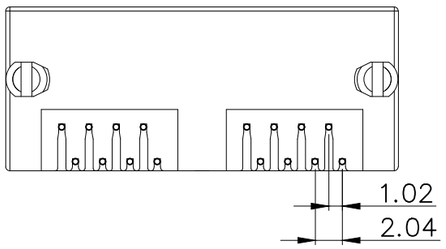

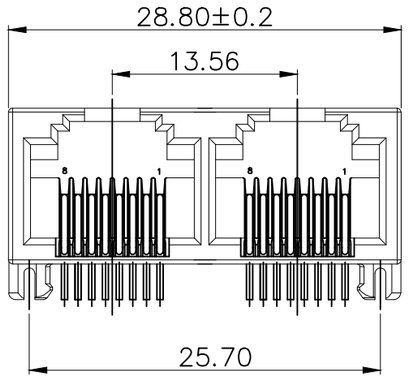

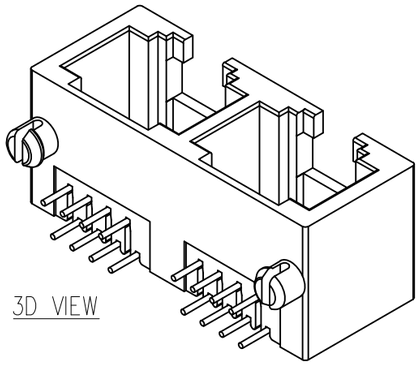

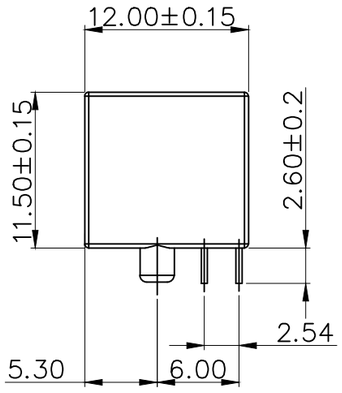

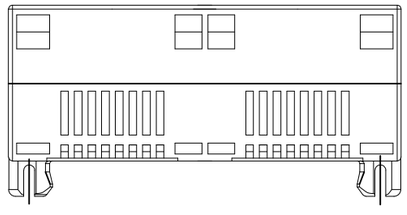

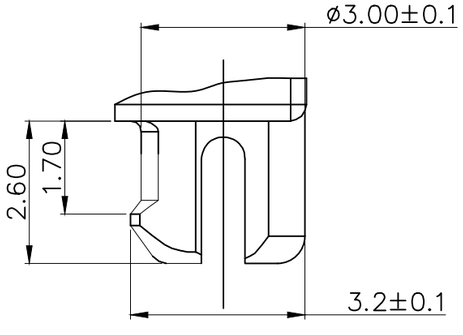

DETAIL"X"

SCALE 4:1

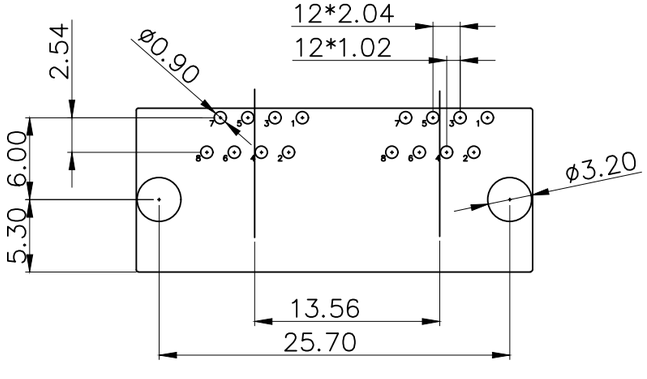

RECOMMENDED PCB LAYOUT

TOP VIEW(TOL:±0.05)

NOTES:

1. MATERIAL:
   1.1. HOUSING: PBT ,COLOUR IS YELLOW 7405C;
   1.2. CONTACT: PHOSPHOR BRONZE,ø0.46±0.02mm;
2. FINISH: Ni 50U" OVER ALL,GOLD PLATED G/Fu" ;
3. RECINNEBDED PCB THICKNESS: 1.60mm;
4. ELECTRICAL:
   4.1. VOLTAGE RATING: 125 VAC RMS;
   4.2. CURRENT RATING: 1.5 AMP;
   4.3. CONTACT RESISTANCE: 35MILLIOHMS MAX.;
   4.4. WITHSTAND VOLTAGE: 1000 VAC RMS 50(60)Hz,1MIN.;
   4.5. INSULATION RESISTANCE: 1000MEGOHMS MIN @500V DC;
5. MECHANICAL:
   5.1. MATING/UNMATING FORCE: 30N MAX.;
   5.2. RETENTIION STRENGTH: 50N MIN.;
   5.3. OPERATING LIFE: 750 CYCLES MIN.;
6. SALT SPRAY TEST: 12H;
7. SOLDERABILITY: 245±5℃,5±0.5S;
8. RESISTANCE TO SOLDER: 260±5℃,10±1S;
9. ENVIRONMENTAL:
   9.1. STORAGE TEMPERATURE RANGE: -40℃~+85℃;
   9.2. OPERATION TEMPERATURE RANGE: -25℃~+70℃;
10. MATES WITH: MODULAR PLUGS THAT CONFORM TO FCC REGULATION PART 68.500;

序 号	品 名	材 质	电镀/颜色	备 注
2	接触	铜	镀金G/F	
1	基座	PBT	黄色	

深圳市虹成电子有限公司		品 名 TITLE	网口		
		料 号 PART NO	HC-WK88-MIH12-1X2-Y2		
UNLESS OTHERWISE, GENERAL TOLERANCE:	比 列 SCALE	1:1			
X.xxx ±0.05 X.xx ±0.10 X.x ±0.20 ANGULAR: X.xx° ±1° X.x° ±3° X.° ±5°	单 位 UNIT	MM	制 图 DRAW	AhYe	
	张 数 PART NO	1 OF 1	审 核 CHECKED	夏操云	
	版 本 REV	A	批 准 APPROVE	赵亮亮	

http://hcdz2017.com/

Unikeyic Electronics

Global Electronic Components Distributor

Click to view pricing, inventory, delivery, and lifecycle information:

HC:

HC-PHB2.0-2x5A HC-PZ254-11.5L-1x10PZ HC-USB3.0-C26 HC-USB3.0-C34-P HC-FPC-0.5-10P-FH20 HCZZ0001-4 HCZZ0001-6 HCZZ0032-6 HCZZ0576-5 HC-FPC-0.5-40P-FH20 HC-PM254-8.5H-1x21PZ HCZZ0451-4 HCZZ0530-4 HC-PM200-4.3H-2x20PZ HC-PZ254-11.5L-2x18PZ HCZZ0001-2 HCZZ0451-6 HC-FPC-0.5-50P-FHH20 HC-FPC-0.5-6P-CSH20 HC-PZ127-7.2L-2x3PS HC-USB3.0-L257-J HCZZ0451-3 HC-PM200-4.3H-2x8PS HC-PM254-5.0H-2x10PZ HCZZ0514-6 HC-FPC-0.5-24P-FH20 HC-PHB2.0-2x4AW HC-PM254-8.5H-2x20PS HC-PZ254-13.8L-1x6PWA HC-USB3.0-L175-2X1-J