GENERAL DESCRIPTION

The MCP1802 series is a set of low voltage differential (LDO) converters with a wide voltage input range of 10V, low voltage differential, low power consumption, and miniaturized packaging. The output voltage range is 3.0-5.0V, and the MCP1802 has low static current characteristics as low as 3.0uA.

The circuit also has a CE enable control port, which can put the circuit into sleep mode. It is particularly suitable for battery powered and long-term standby system equipment applications, helping to reduce standby power consumption of system equipment, effectively extending standby time and battery life.

FEATURES

- Low Power Consumption
- Low Voltage Drop
- Low Temperature Coefficient
- Withstanding Voltage 10V
- Quiescent Current 3.0μA
- Output Voltage Accuracy: tolerance ±2%
- High output current: 300mA
- over load protection

TYPICAL APPLICATIONS

- Battery-powered Equipments
- Communication Equipments
- Audio/Video Equipments

PIN CONFIGURATION

SOT23-5	
	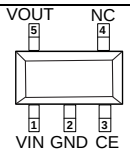

ORDERING INFORMATION

MCP1802**T-XXXX** **X / AK**

Product Name	Output Voltage	Temperature	Package
	3002 : 3.0V 3302 : 3.0V 5002 : 5.0V	-40℃ to +85℃	OT:SOT23-5

PIN DESCRIPTION

PIN No.	Name	Functions Description
1	VIN	input
2	VSS	ground
3	CE	ON / OFF Control
4	NC	No Connect
5	VOUT	output

FUNCTIONAL BLOCK DIAGRAM

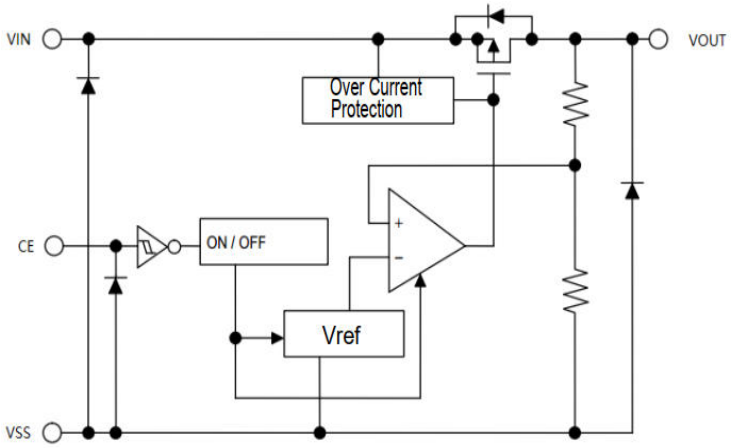

ABSOLUTE MAXIMUM RATINGS

Description	Symbol	Value range	Unit
Limit Power Voltage	V_{IN}	−0.3～+20	V
Storage Temperature Range	T_{STG}	−50～+125	℃
Operating Free-air Temperature Range	T_A	−40～+85	℃

Note : Stresses greater than those listed under "Absolute Maximum Ratings" may cause permanent damage to the device. These are stress ratings only, and functional operation of the device at these or any other conditions beyond those indicated under "Recommended Operating Conditions" is not implied. Exposure to "Absolute Maximum Ratings" for extended periods may affect device reliability.

HEAT DISSIPATION

Description	Symbol	Package	Value range	Unit
Thermal resistance	θ_{JA}	SOT23-5	500	℃/W
Power dissipation	P_W	SOT23-5	200	mW

DC CHARACTERISTICS (unless otherwise noted T_A =+25°C)

Parameter	Symbol	Test Condition	Min	Typ	Max	Unit
Input Voltage	V_{IN}		—		10	V
Output Voltage	V_{OUT}		3.0		5.0	V
Voltage Accuracy		I_{OUT} =1mA	-2		+2	%
Output Current	I_{OUT}	$V_{IN}=V_{OUT}+2.0V$	—	300	—	mA
Load Regulation	$\triangle V_{OUT}$	$V_{IN}=V_{OUT}+2.0V$ 1mA≤I_{OUT}≤150mA	—	15	—	mV
Line Regulation	$\triangle V_{OUT}/V_{OUT}*\triangle V_{IN}$	$V_{OUT}+1.0V \le V_{IN} \le 15V$ I_{OUT}=10mA	—	0.015	0.2	%/V
Voltage Drop	V_{DIF} ①	I_{OUT}=100mA,V_{OUT}=3.3V	—	200	—	mV
Quiescent Current	I_{SS}	$V_{CE}=V_{IN}$	—	3.0	5.0	μA
Standby Current	$I_{STANDBY}$	$V_{CE}=V_{SS}$			0.2	μA
--	V_{CEH}	$V_{IN}=V_{OUT}+2.0V$	1.7		15	V
--	V_{CEL}	$V_{IN}=V_{OUT}+2.0V$	0		0.3	V
short-circuit current	I_{SHORT}	$V_{IN}=V_{OUT}+2.0V$	—	400	—	mA
Temperature Coefficient	$\triangle V_{OUT}/\triangle T_A*V_{OUT}$	$V_{IN}=V_{OUT}+2.0V$ I_{OUT}=10mA -40°C≤T_A≤125°C	—	±100	—	ppm/°C
Discharge Resistor	R_{DIS} ②	VCE<0.5V		300		Ω

Note : When $V_{IN}=V_{OUT}+2.0V$, as the output voltage declined 2%, the $V_{DIF}=V_{IN}-V_{OUT}$.
Output active discharge resistor R_{DIS} , As the input voltage increases, it decreases.

FUNCTIONAL DESCRIPTION

MCP1802series are linear voltage regulator ICs withstanding 15V voltage. The series ICconsists of a voltage reference, an error amplifier, a current limiter and a phase compensation circuit plus a driver transistor. The output stabilization capacitor is also compatible with low ESR ceramic capacitors.

The over current protection circuit and the over voltage protection circuit are built-in. The protection circuit will operate when the output current or input voltage reaches limit level.

TYPICAL APPLICATION CIRCUIT

Basic Circuit

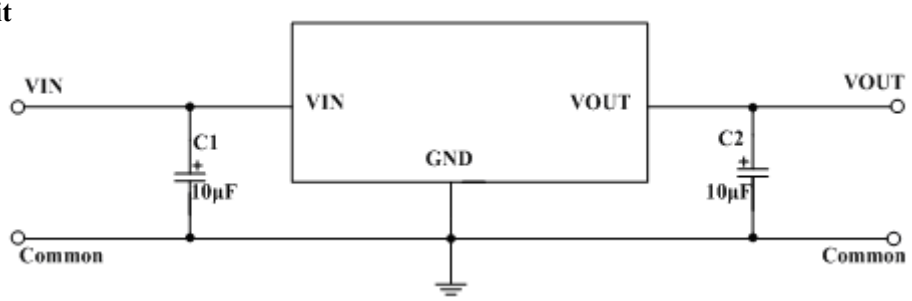

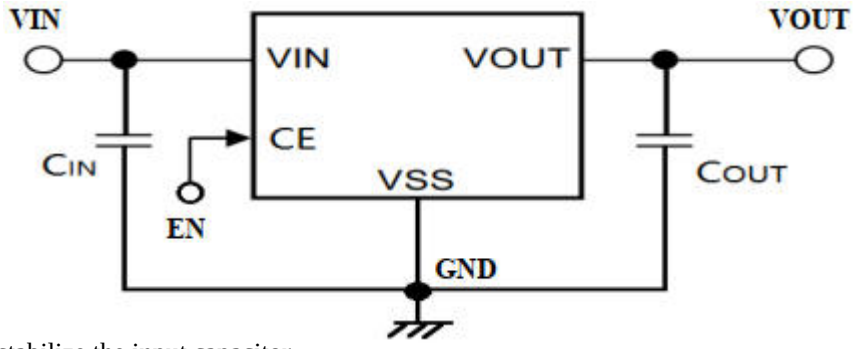

1. CIN is used to stabilize the input capacitor
2. CIN eramic capacitors greater than or equal to 1pF can be used for COUT.

TYPICAL CHARACTERISTICS

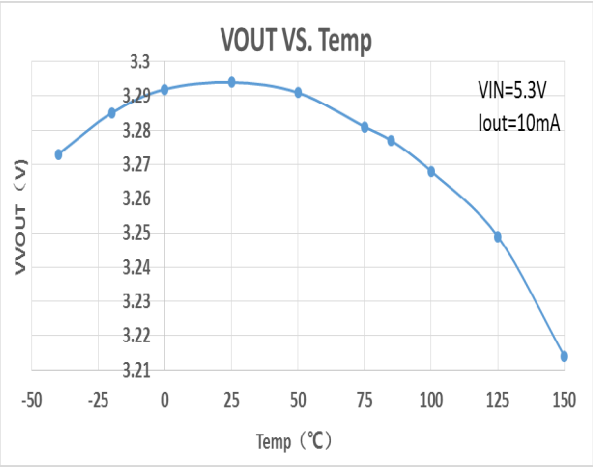

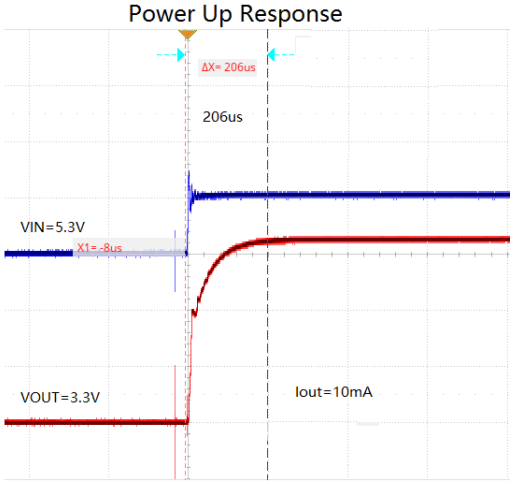

PACKAGE INFORMATION

SOT89

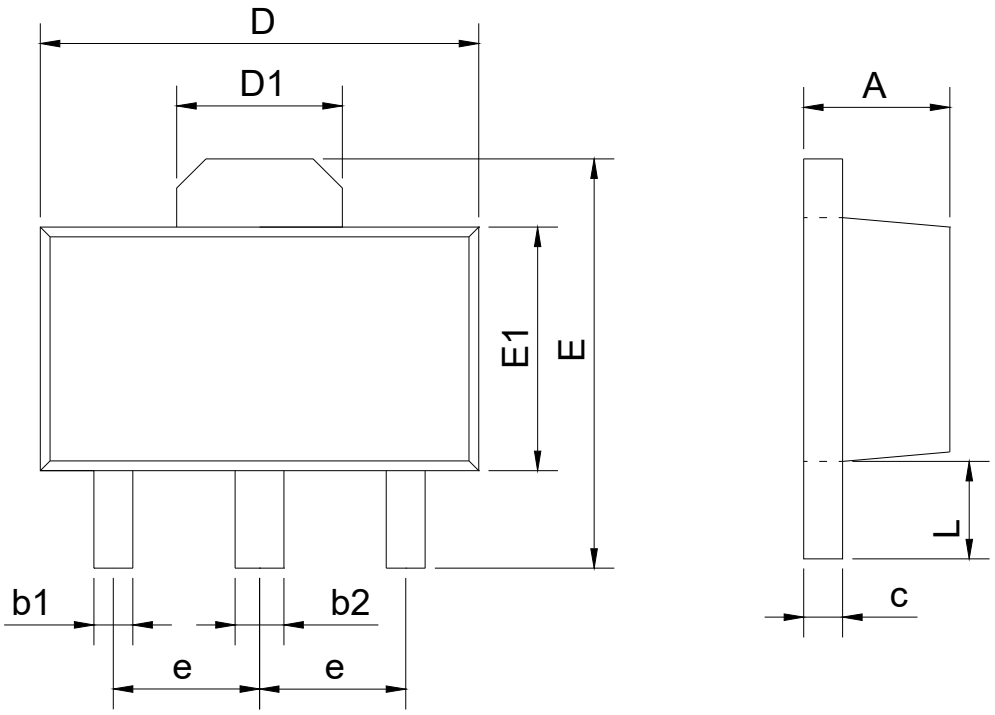

SYMBOL	mm	
	min	max
A	1.40	1.60
b1	0.35	0.50
b2	0.45	0.60
c	0.36	0.46
D	4.30	4.70
D1	1.40	1.80
E	4.00	4.40
E1	2.30	2.70
e	1.50BSC	
L	0.80	1.20

SOT23-5

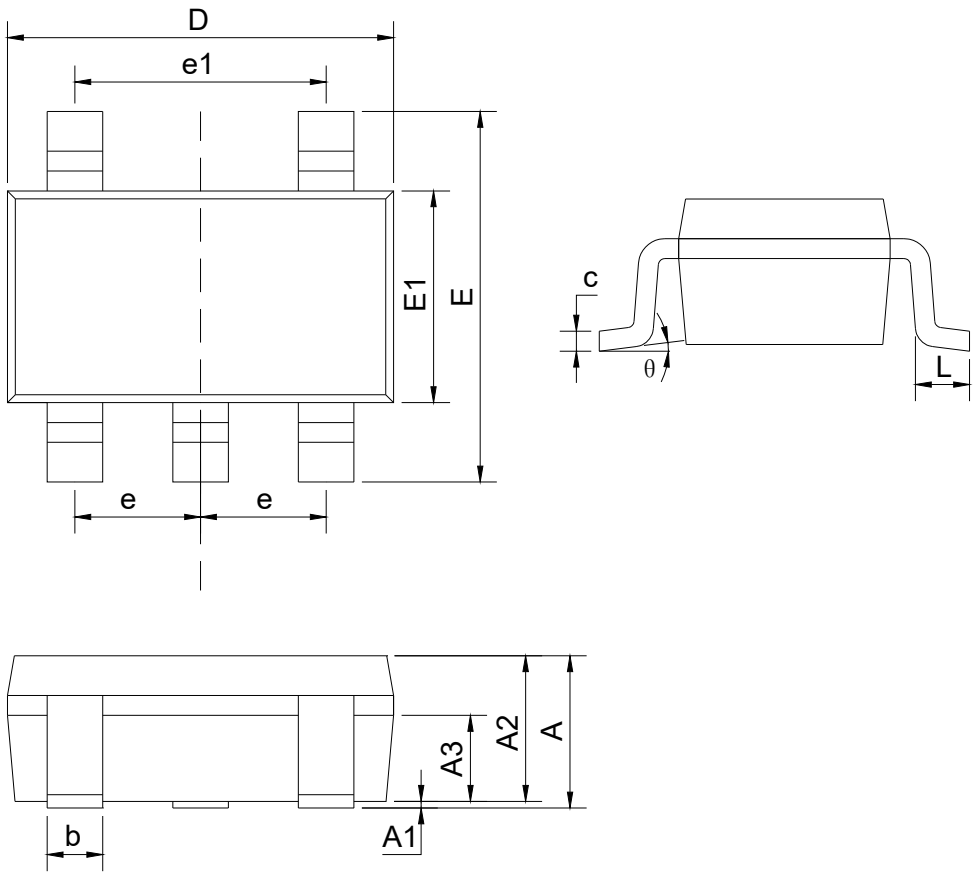

SYMBOL	mm	
	min	max
A		1.35
A1	0.04	0.15
A2	1.00	1.20
A3	0.55	0.75
b	0.38	0.48
c	0.10	0.25
D	2.72	3.12
E	2.60	3.00
E1	1.40	1.80
e	0.95BSC	
e1	1.90BSC	
L	0.30	0.60
θ	0	8°