Bulletin PD-20585 rev. D 03/03

International
IOR Rectifier

MBRS340TR

SCHOTTKY RECTIFIER

3 Amp

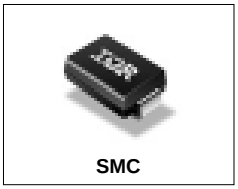

SMC

Major Ratings and Characteristics

Characteristics	Value	Units
$I_{F(AV)}$ Rectangular waveform	3.0	A
V_{RRM}	40	V
I_{FSM} @ t_p=5µs sine	1580	A
V_F @3.0Apk, T_J=125°C	0.43	V
T_J range	- 55 to 150	°C

Description/ Features

The MBRS340TR surface-mount Schottky rectifier has been designed for applications requiring low forward drop and small foot prints on PC boards. Typical applications are in disk drives, switching power supplies, converters, free-wheeling diodes, battery charging, and reverse battery protection.

- Small foot print, surface mountable
- Very low forward voltage drop
- High frequency operation
- Guard ring for enhanced ruggedness and long term reliability

Device Marking: IR34

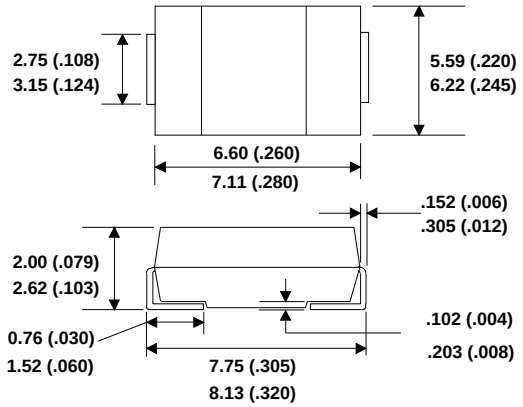

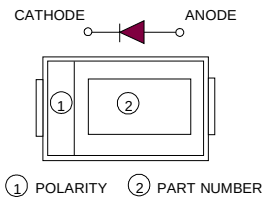

Outline SMC
Dimensions in millimeters and (inches)
For recommended footprint and soldering techniques refer to Application Note # AN-994

Voltage Ratings

	Part number	MBRS340TR
V_R	Max. DC Reverse Voltage (V)	40
V_{RWM}	Max. Working Peak Reverse Voltage (V)	

Absolute Maximum Ratings

	Parameters	Value	Units	Conditions	
$I_{F(AV)}$	Max. Average Forward Current	3.0	A	50% duty cycle @ T_L = 118 °C, rectangular wave form	
		4.0		50% duty cycle @ T_L = 110 °C, rectangular wave form	
I_{FSM}	Max. Peak One Cycle Non-Repetitive	1580	A	5µs Sine or 3µs Rect. pulse	Following any rated load condition and with rated V_{RRM} applied
	Surge Current	80		10ms Sine or 6ms Rect. pulse	
E_{AS}	Non Repetitive Avalanche Energy	6	mJ	T_J = 25 °C, I_{AS} = 1.0A, L = 12mH	
I_{AR}	Repetitive Avalanche Current	1.0	A	Current decaying linearly to zero in 1 µsec Frequency limited by T_J max. Va = 1.5 x Vr typical	

Electrical Specifications

	Parameters	Value	Units	Conditions	
V_{FM}	Max. Forward Voltage Drop (1)	0.525	V	@ 3A	T_J = 25 °C
		0.68	V	@ 6A	
		0.43	V	@ 3A	T_J = 125 °C
		0.57	V	@ 6A	
I_{RM}	Max. Reverse Leakage (1)	2.0	mA	T_J = 25 °C	V_R = rated V_R
	Current	20	mA	T_J = 100°C	
		35	mA	T_J = 125 °C	
C_T	Max. Junction Capacitance	230	pF	V_R = 5V_{DC} (test signal range 100KHz to 1Mhz) 25°C	
L_S	Typical Series Inductance	3.0	nH	Measured lead to lead 5mm from package body	
dv/dt	Max. Voltage Rate of Change	10000	V/µs	(Rated V_R)	

(1) Pulse Width < 300µs, Duty Cycle < 2%

Thermal-Mechanical Specifications

	Parameters	Value	Units	Conditions
T_J	Max. Junction Temperature Range (*)	-55 to 150	°C	
T_{stg}	Max. Storage Temperature Range	-55 to 150	°C	
R_{thJL}	Max. Thermal Resistance Junction to Lead (**)	12	°C/W	DC operation
R_{thJA}	Max. Thermal Resistance Junction to Ambient	46	°C/W	DC operation
wt	Approximate Weight	0.24(0.008)	g(oz.)	
	Case Style	SMC		Similar to DO-214AB
	Device Marking	IR34		

(*) $\frac{dPtot}{dTj} < \frac{1}{Rth(j\text{-}a)}$ thermal runaway condition for a diode on its own heatsink

(**) Mounted 1 inch square PCB

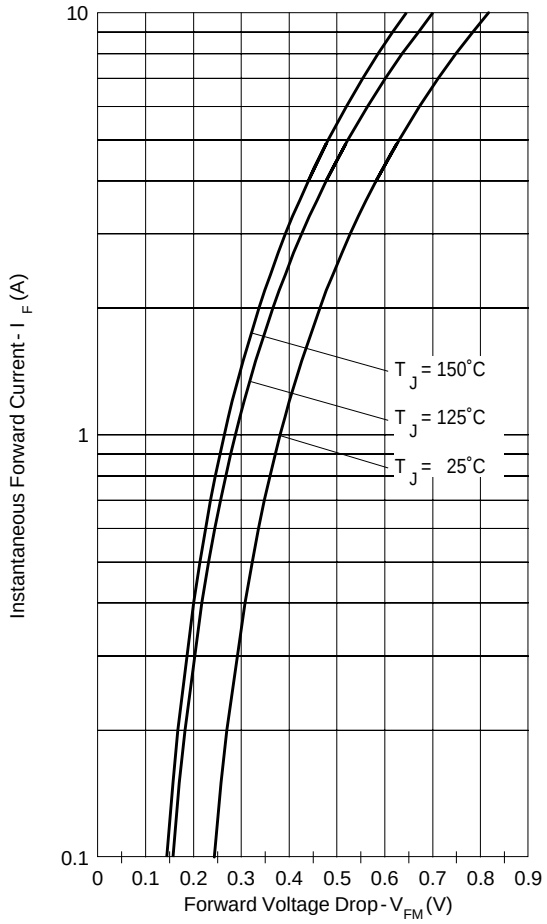

Fig. 1 - Max. Forward Voltage Drop Characteristics (Per Leg)

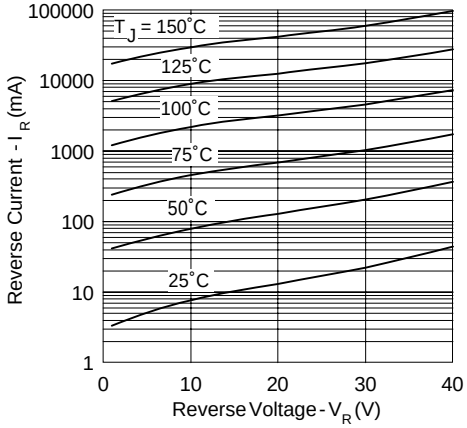

Fig. 2 - Typical Values Of Reverse Current Vs. Reverse Voltage (Per Leg)

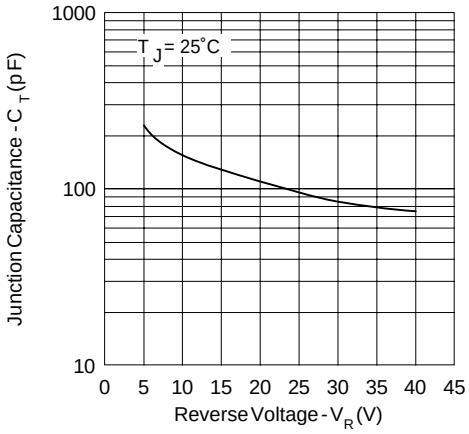

Fig. 3 - Typical Junction Capacitance Vs. Reverse Voltage (Per Leg)

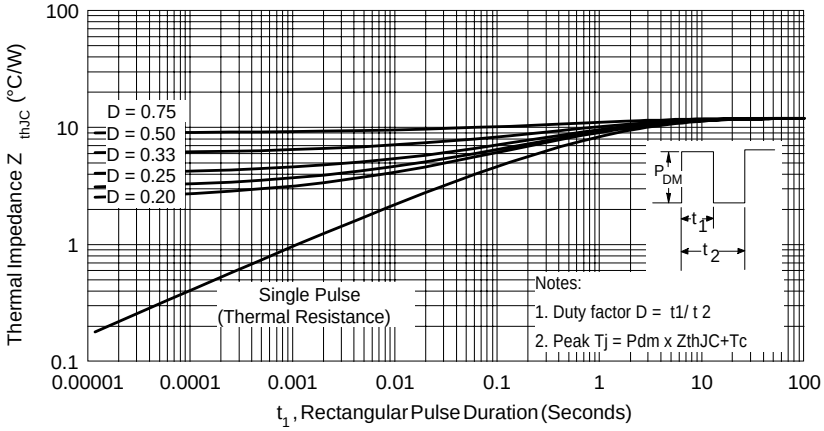

Fig. 4 - Max. Thermal Impedance Z_{thJC} Characteristics (Per Leg)

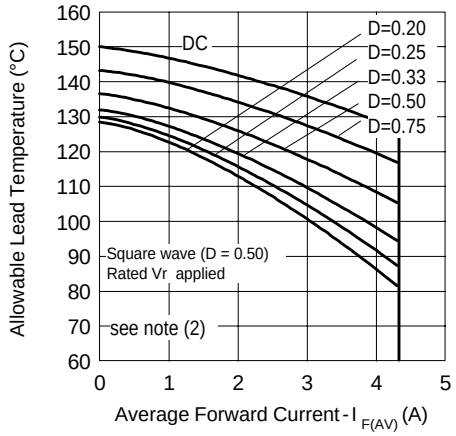

Fig. 4 - Maximum Average Forward Current
Vs. Allowable Lead Temperature

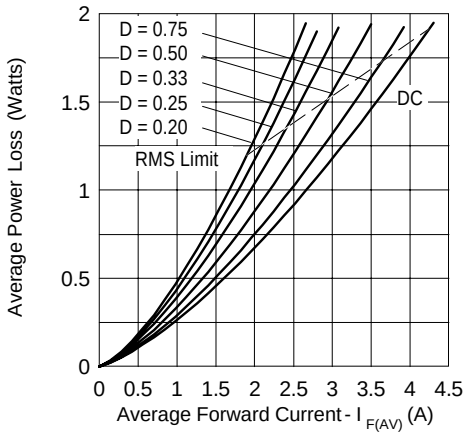

Fig. 5 - Maximum Average Forward Dissipation
Vs. Average Forward Current

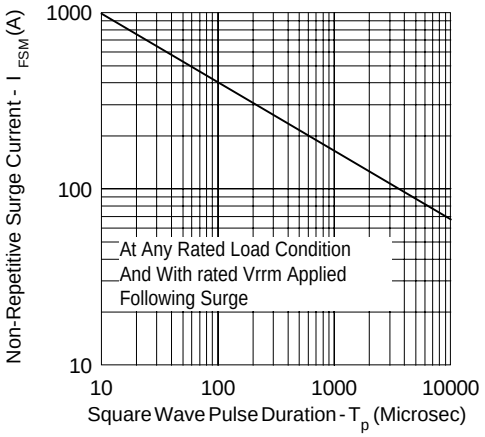

Fig. 6 - Maximum Peak Surge Forward Current Vs. Pulse Duration

(2) Formula used: $T_C = T_J - (Pd + Pd_{REV}) \times R_{thJC}$;
Pd = Forward Power Loss = $I_{F(AV)} \times V_{FM} @ (I_{F(AV)} / D)$ (see Fig. 6);
Pd_{REV} = Inverse Power Loss = $V_{R1} \times I_R (1 - D)$; $I_R @ V_{R1}$ = 80% rated V_R

Tape & Reel Information

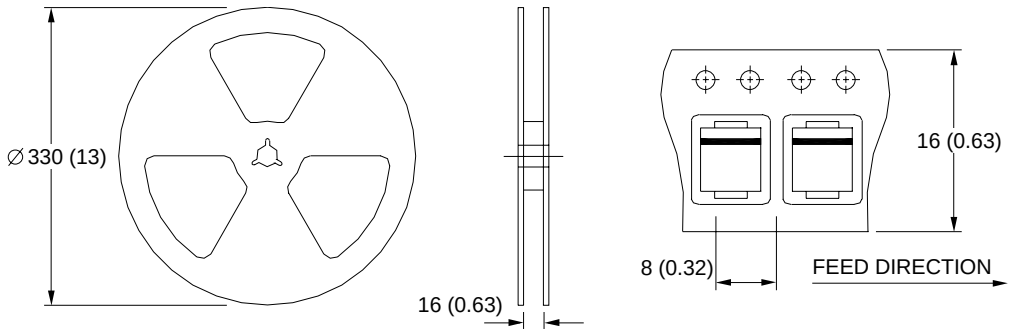

Dimensions in millimetres and (inches)

Marking & Identification

Each device has 2 rows for identification. The first row designates the device as manufactured by International Rectifier as indicated by the letters "IR", and the Part Number (indicates the current and the voltage rating). The second row indicates the year, the week of manufacturing and the Site ID.



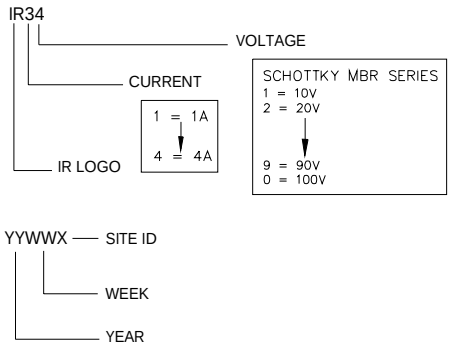

Ordering Information

MBRS340TR - TAPE AND REEL

WHEN ORDERING, INDICATE THE PART NUMBER AND THE QUANTITY (IN MULTIPLES OF 3000 PIECES).

EXAMPLE: MBRS340TR - 6000 PIECES

Data and specifications subject to change without notice.
This product has been designed and qualified for Industrial Level.
Qualification Standards can be found on IR's Web site.

International
IOR Rectifier

IR WORLD HEADQUARTERS: 233 Kansas St., El Segundo, California 90245, USA Tel: (310) 252-7105
TAC Fax: (310) 252-7309
Visit us at www.irf.com for sales contact information. 03/03

Unikeyic Electronics

Global Electronic Components Distributor

Click to view pricing, inventory, delivery, and lifecycle information:

Vishay Intertechnology:

ISOA200R11003JT CRCW08051M00FKEA PR03000204700JAC00 RCL12183R30FKEK ILHB1806ER600V PTF5610K000BYEK WSL2512R0300FTB BRT13-H-X006 LTO150H2R200JTE3 MSS2P3-M3/89A PR02000204709JA100 PTCCL05H280HTE SS2FN6HM3/H CRCW040213K0FKTD PR01000101603JR500 SE20DLGHM3/I SMBJ12CA-E3/52 293D337X96R3D2T-E3 CRCW1206270KJNEA LTO150H470R0JTE3 RS0105R000FE12 SM8S43AHE3_A/I SUD50P04-08-GE3 CCF5510K0FKE36 CRCW2512150RFKEGHP VS-50RIA60 1.5SMC91A-E3/57T CRCW1206510KFKEA SQD50P08-28_GE3 WSL27265L000FEB