TECH PUBLIC
台舟电子

UCLAMP0541Z

1-Line Bi-directional TVS Diode

WWW.TECHPUBLIC.COM

Features

- Low operating voltage: ± 5V
- Ultra low capacitance:3pF typical
- Ultra low leakage: nA level
- Low operating voltage:
- Low clamping voltage
- 2-pin leadless package
- Complies with following standards:
- – IEC 61000-4-2 (ESD) immunity test
  Air discharge: ±15kV
  Contact discharge: ±8kV
- – IEC61000-4-5 (Lightning) 2A (8/20 μs)
- RoHS Compliant
- Lead Finish: NiPdAu

Mechanical Characteristics

- Package: DFN0603-2 (0201)
- Lead Finish: Matte Tin
- Case Material: “Green” Molding Compound.
- Moisture Sensitivity: Level 3 per J-STD-020
- Terminal Connections: See Diagram Below
- Shipping Qty :15000pcs Or 10000/7Inch Tape & Reel

Applications

- Cellular Handsets and Accessories
- Personal Digital Assistants
- Notebooks and Handhelds
- Portable Instrumentation
- Digital Cameras
- Peripherals

Dimensions and Pin Configuration

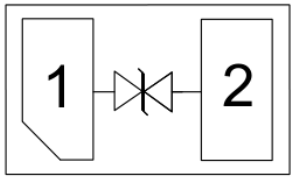

Absolute Maximum Ratings (Tamb=25°C unless otherwise specified)

Parameter	Symbol	Value	Unit
Peak Pulse Power (8/20μs)	Ppk	40	W
Peak Pulse Current (8/20μs)	Ipp	2	A
ESD per IEC 61000−4−2 (Air) ESD per IEC 61000−4−2 (Contact)	V_{ESD}	±30 ±30	kV
Operating Temperature Range	T_J	−55 to +125	°C
Storage Temperature Range	Tstg	−55 to +150	°C

Electrical Characteristics (TA=25°C unless otherwise specified)

Parameter	Symbol	Min	Typ	Max	Unit	Test Condition
Reverse Working Voltage	V_{RWM}			5	V	
Breakdown Voltage	V_{BR}	5.5			V	I_T = 1mA
Reverse Leakage Current	I_R			0.1	uA	V_{RWM} =5V
Clamping Voltage	V_C			10	V	Ipp=1A(8x 20us pulse)
Clamping Voltage	V_C		12	15	V	Ipp=2A(8x 20us pulse)
Junction Capacitance	C_J		3	4	pF	VR = 0V, f = 1MHz

Typical Performance Characteristics (T_A=25°C unless otherwise Specified)

Fig1. 8/20μs Pulse Waveform

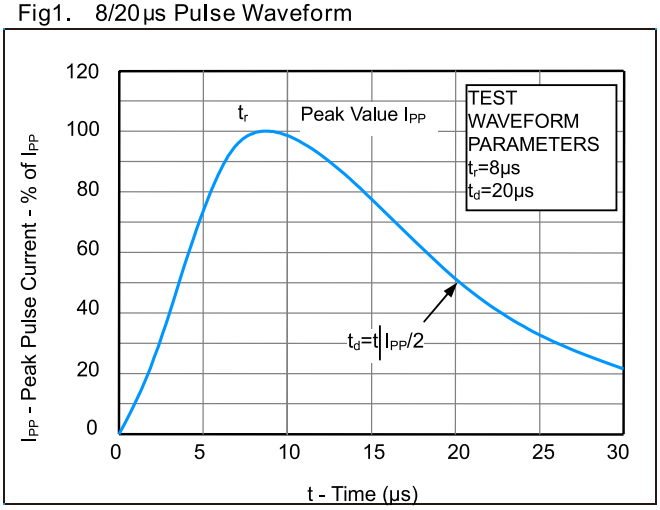

Fig2. ESD Pulse Waveform (acco rding to IEC 61000-4-2)

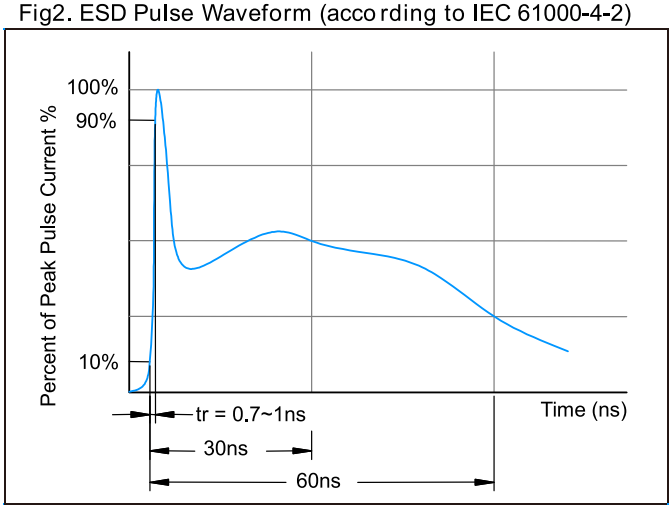

Fig3. Power Derating Curve

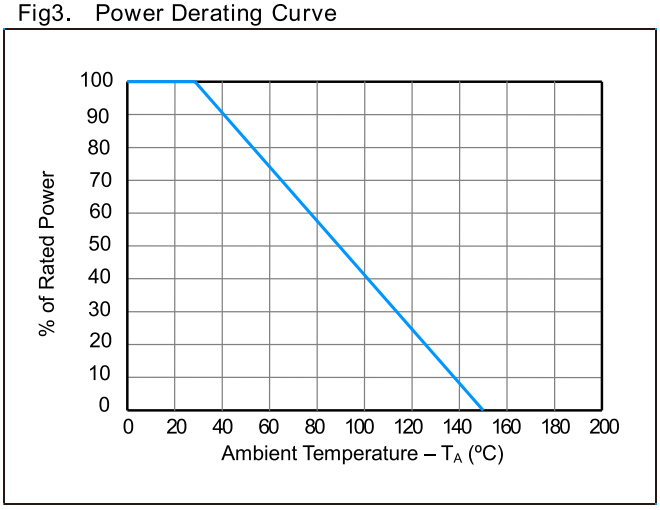

DFN0603-2 Package Outline Drawing (0201)

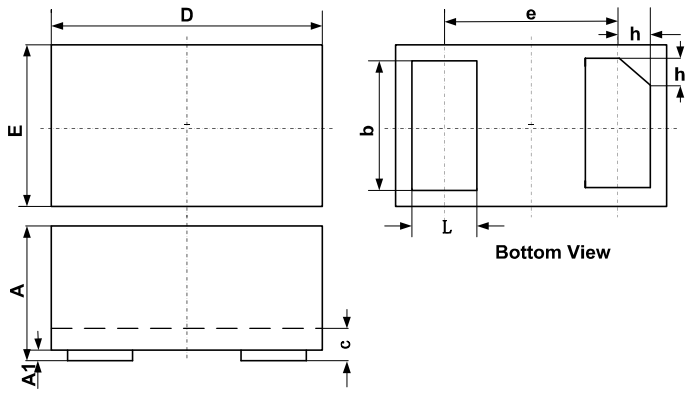

SYM	DIMENSIONS		
	MILLIMETERS		
	MIN	NOM	MAX
A	0.230	0.300	0.330
A1	0.000	0.020	0.050
b	0.215	0.245	0.275
c	0.120	0.150	0.180
D	0.550	0.600	0.650
e	0.355 BSC		
E	0.250	0.300	0.350
L	0.160	0.190	0.220
h	0.079 BSC		

Suggested Land Pattern

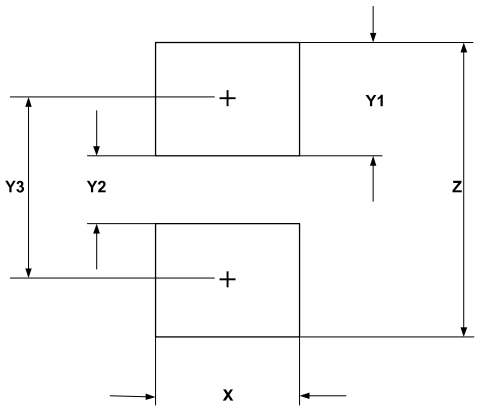

SYM	DIMENSIONS	
	MILLIMETERS	INCHES
X	0.30	0.012
Y1	0.25	0.010
Y2	0.15	0.006
Y3	0.40	0.016
Z	0.65	0.026

Unikeyic Electronics

Global Electronic Components Distributor

Click to view pricing, inventory, delivery, and lifecycle information:

TECH PUBLIC:

ESD5B5.0ST1G-P FDC6301N-TP DMP6350S TPS3809L30DBVR-TP IRFR2405TRPBF-TP TPB1A30-123 TPS7B6950DBVR-TP TPZVN3320FTA TPSPX3819M5-L-3-3 BV15C TPD1213A-02SM TPDMG6602SVT TPESD0504S6-A TPESD5311N BSN20W TPADM809SAKSZ TPGC12C-1 SN7002W TPADM809LAKSZ QM3003J-TP SI3932DV TPFMMT493 TPWSB5557Z TPZXMP3A13FTA DDTA143ZCA FDMS7670AS-TP LTH7 TPAPX809S-31SA TPB05A40-323 TPESD0402G08V