TSM038N03PQ33 RGG

N-Channel Enhancement Mode MOSFET

Description

The TSM038N03PQ33 RGG uses advanced trench technology to provide excellent $R_{DS(ON)}$, low gate charge and operation with gate voltages as low as 4.5V. This device is suitable for use as a Battery protection or in other Switching application.

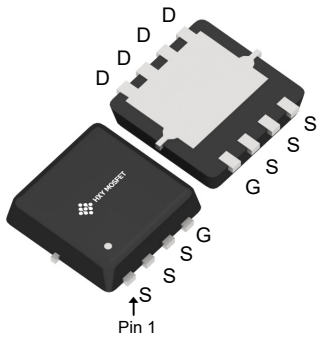

DFN3X3-8L

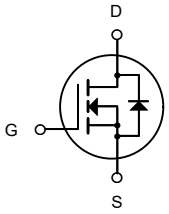

N-Channel MOSFET

General Features

V_{DS} = 30V I_D = 85A

$R_{DS(ON)}$ < 3.1 mΩ @ V_{GS}=10V

Application

Battery protection

Load switch

Uninterruptible power supply

Ordering Information

Product ID	Pack	Brand	Qty(PCS)
TSM038N03PQ33 RGG	DFN3X3-8L	HXY MOSFET	5000

Absolute Maximum Ratings (Tc=25°C unless otherwise noted)

Symbol	Parameter	Rating	Units
VDS	Drain-Source Voltage	30	V
VGS	Gate-Source Voltage	±20	V
I_D@T_C=25℃	Continuous Drain Current, V_{GS} @ 10V	85	A
I_D@T_C=75℃	Continuous Drain Current, V_{GS} @ 10V	78	A
IDM	Pulsed Drain Current	480	A
EAS	Single Pulse Avalanche Energy	333	mJ
IAS	Avalanche Current	25	A
P_D@T_C=25℃	Total Power Dissipation	88	W
TSTG	Storage Temperature Range	-55 to 150	℃
T_J	Operating Junction Temperature Range	-55 to 150	℃
R_{θ}JC	Thermal Resistance Junction-Case	1.4	℃/W

Electrical Characteristics (T_J=25°C, unless otherwise noted)

Symbol	Parameter	Conditions	Min.	Typ.	Max.	Unit
BV_{DSS}	Drain-Source Breakdown Voltage	V_{GS}=0V , I_D=250uA	30	---	---	V
$\triangle BV_{DSS}/\triangle T_J$	BV_{DSS} Temperature Coefficient	Reference to 25°C, I_D=1mA	---	---	---	V/°C
$R_{DS(ON)}$	Static Drain-Source On-Resistance[2]	V_{GS}=10V , I_D=20A	---	2.9	3.1	mΩ
		V_{GS}=4.5V , I_D=15A	---	3.9	4.5	
$V_{GS(th)}$	Gate Threshold Voltage	V_{GS}=V_{DS} , I_D =250uA	1	1.5	2.2	V
I_{DSS}	Drain-Source Leakage Current	V_{DS}=30V , V_{GS}=0V , T_J=25°C	---	---	1	uA
I_{GSS}	Gate-Source Leakage Current	V_{GS}=±20V , V_{DS}=0V	---	---	±100	nA
R_g	Gate Resistance	V_{DS}=0V , V_{GS}=0V , f=1MHz	---	---	---	Ω
Q_g	Total Gate Charge	V_{DS}=15V , V_{GS}=10V , I_D=30A	---	72	---	nC
Q_{gs}	Gate-Source Charge		---	46	---	
Q_{gd}	Gate-Drain Charge		---	13	---	
$T_{d(on)}$	Turn-On Delay Time	V_{GS}=10V, V_{DS}=15V, I_D=30A, R_L=3Ω	---	14	---	ns
T_r	Rise Time		---	18	---	
$T_{d(off)}$	Turn-Off Delay Time		---	40	---	
T_f	Fall Time		---	12	---	
C_{iss}	Input Capacitance	V_{DS}=15V , V_{GS}=0V , f=1MHz	---	4000	---	pF
C_{oss}	Output Capacitance		---	437	---	
C_{rss}	Reverse Transfer Capacitance		---	396	---	

Diode Characteristics

Symbol	Parameter	Conditions	Min.	Typ.	Max.	Unit
I_S	Continuous Source Current[1,4]	V_G=V_D=0V , Force Current	---	---	85	A
V_{SD}	Diode Forward Voltage[2]	V_{GS}=0V , I_S=30A , T_J=25°C	---	---	1.2	V
t_{rr}	Reverse Recovery Time	IF=30A , di/dt=100A/μs , T_J=25°C	---	48	---	nS
Q_{rr}	Reverse Recovery Charge		---	80	---	nC

Notes:

1. Repetitive Rating: Pulse Width Limited by Maximum Junction Temperature
2. EAS condition: T_J=25°C, V_{DD}=15V, V_G=10V, R_G=25Ω, L=0.5mH, I_{AS}=25A
3. Pulse Test: Pulse Width≤300μs, Duty Cycle≤0.5%

Typical Characteristics

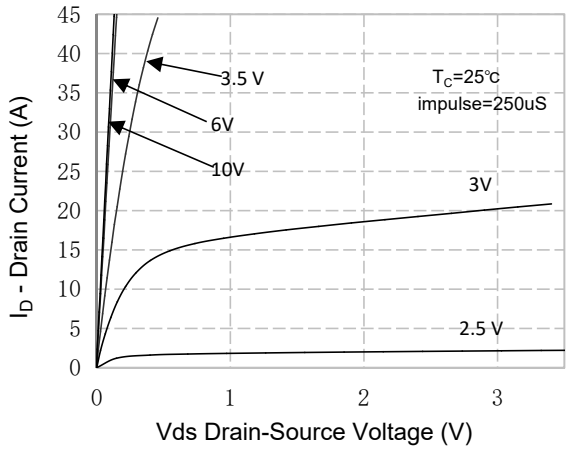

Figure 1. On-Region Characteristics

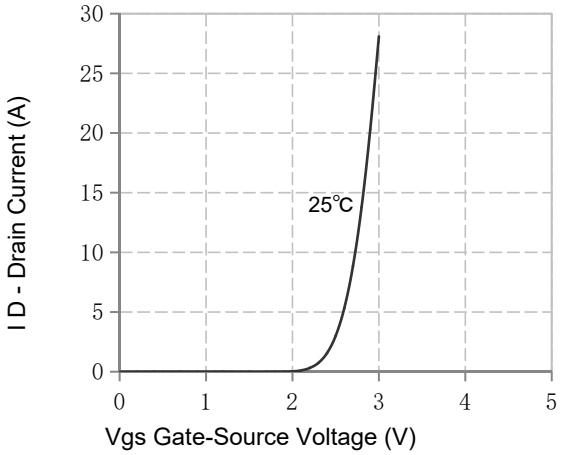

Figure 2. Transfer Characteristics

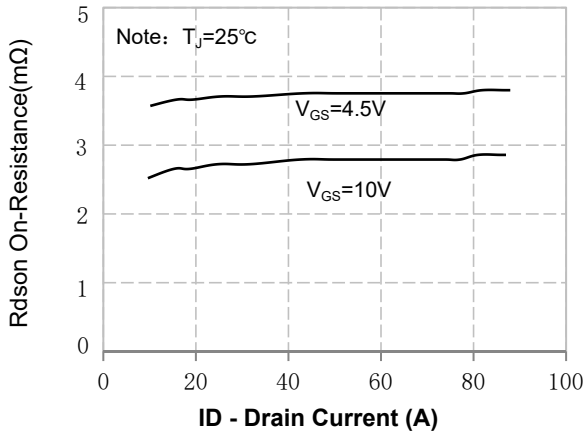

Figure 3. On-Resistance Variation vs Drain Current and Gate Voltage

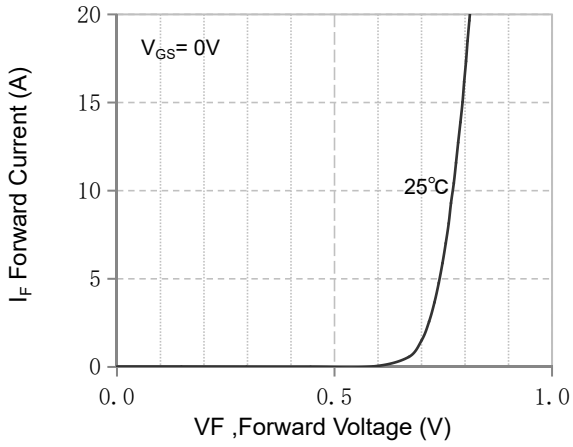

Figure 4. Body Diode Forward Voltage Variation with Source Current and Temperature

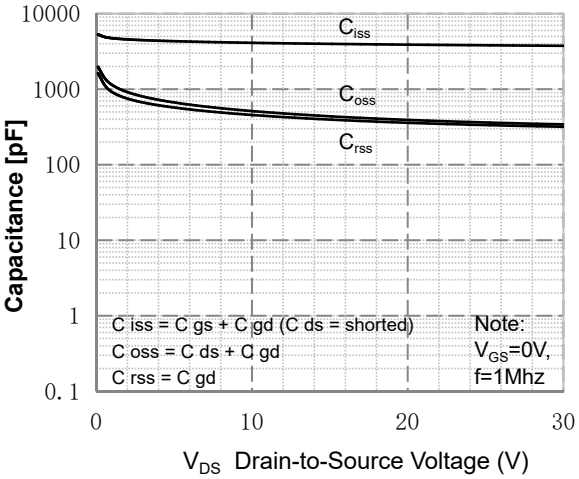

Figure 5. Capacitance Characteristics

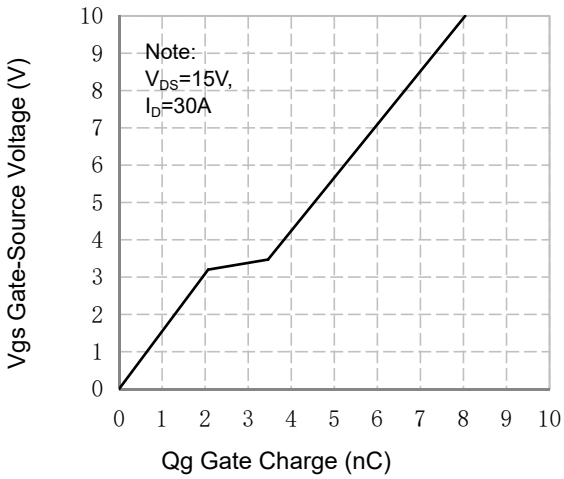

Figure 6. Gate Charge Characteristics

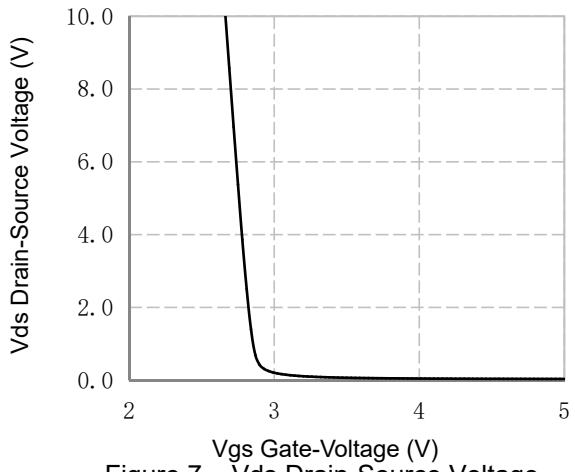

Figure 7. Vds Drain-Source Voltage vs Gate Voltage

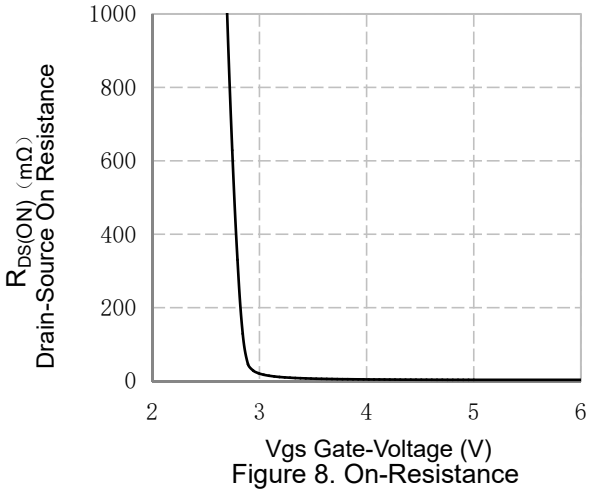

Figure 8. On-Resistance vs Gate Voltage

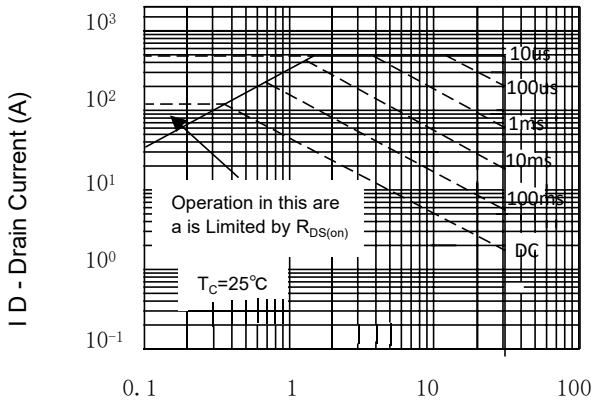

Figure 9. Maximum Safe Operating Area

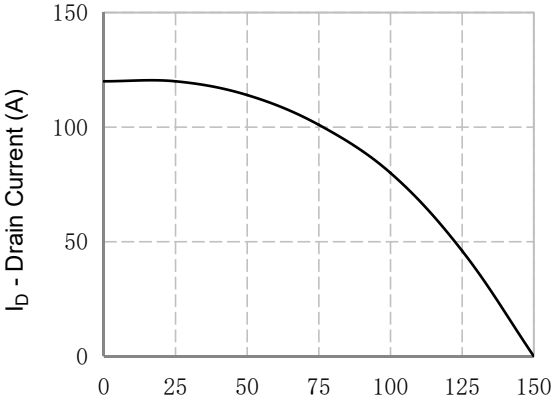

Figure 10. Maximum Continuous Drain Current vs Temperature

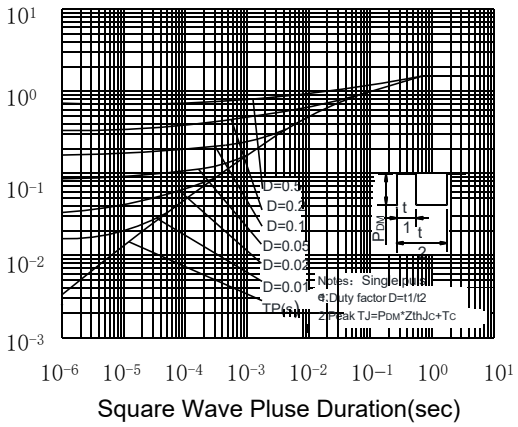

Figure 11. Transient Thermal Response Curve

Test Circuit

Gate Charge Test Circuit & Waveform

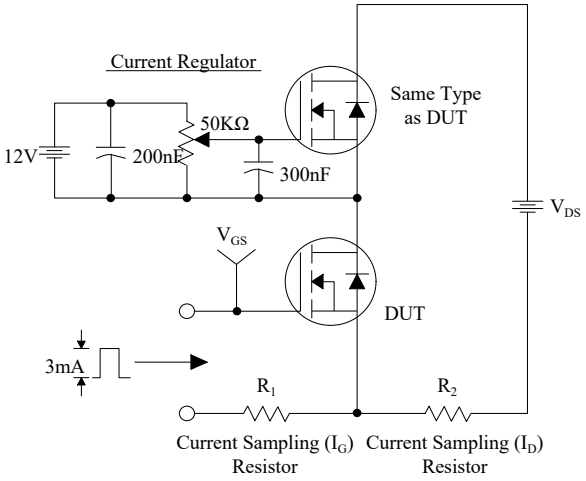

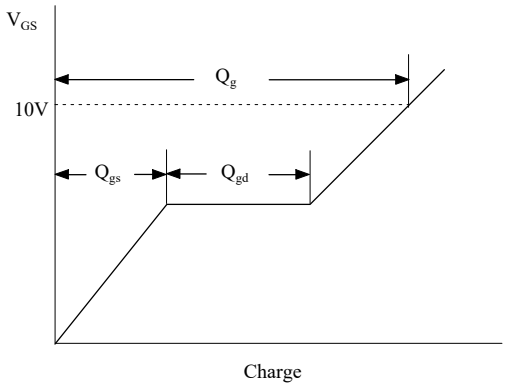

Resistive Switching Test Circuit & Waveforms

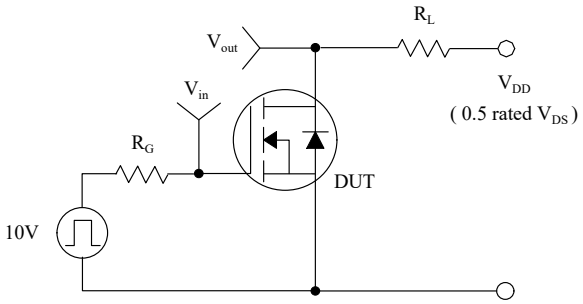

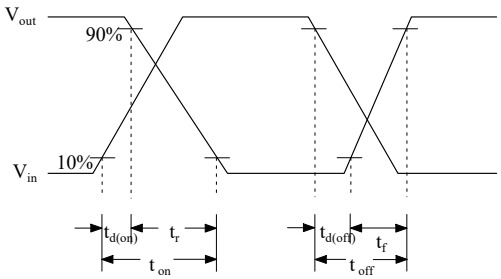

Unclamped Inductive Switching Test Circuit & Waveforms

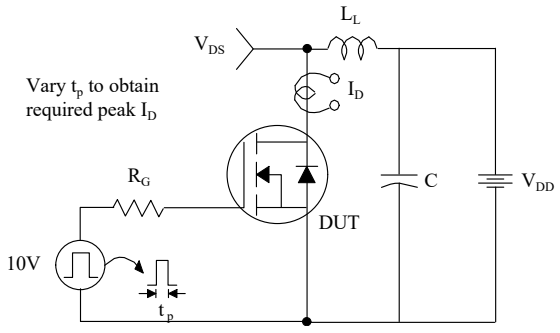

$$E_{AS} = \frac{1}{2} L_L I_{AS}^2$$

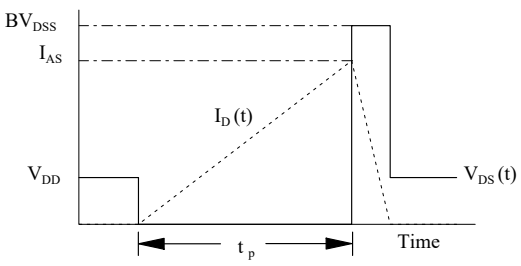

Peak Diode Recovery dv/dt Test Circuit & Waveforms

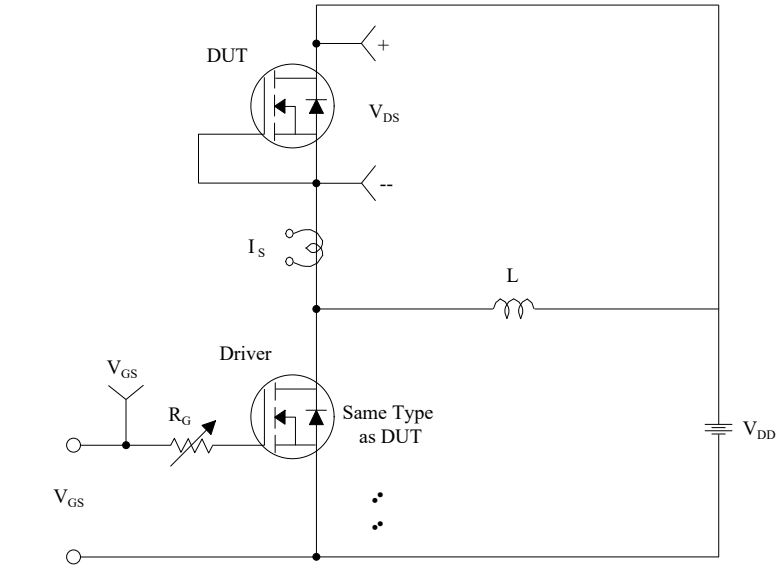

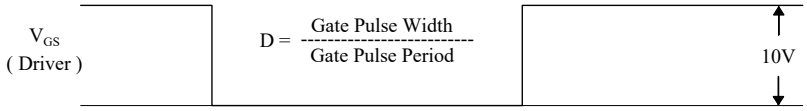

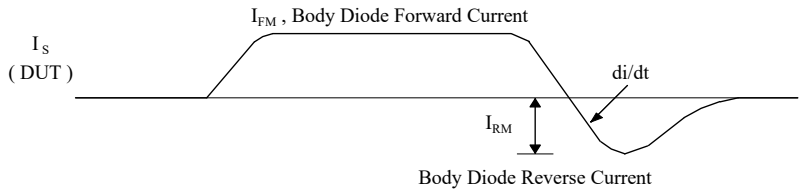

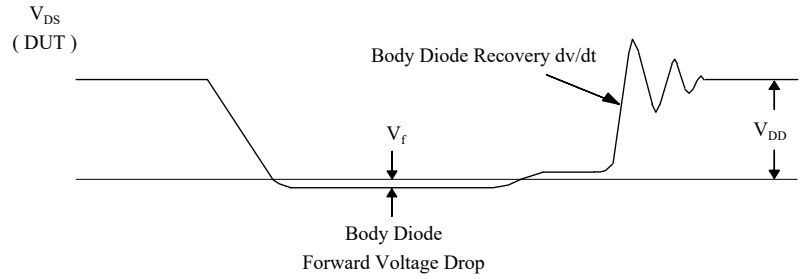

DFN3X3-8L Package Information

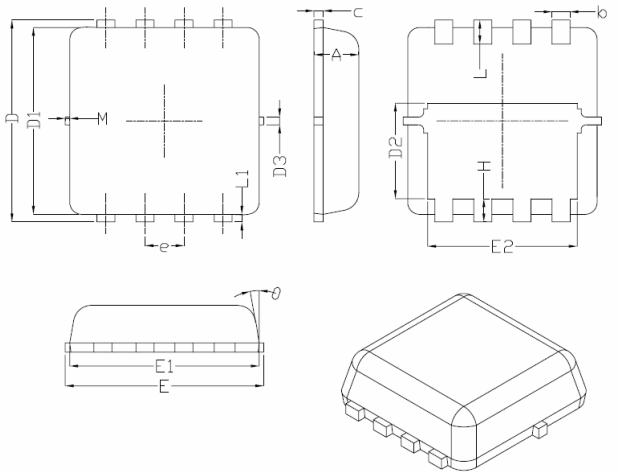

Symbol	Dimensions In Millimeters		
	Min.	Nom.	Max.
A	0.70	0.75	0.80
b	0.25	0.30	0.35
c	0.10	0.15	0.25
D	3.25	3.35	3.45
D1	3.00	3.10	3.20
D2	1.48	1.58	1.68
D3	-	0.13	-
E	3.20	3.30	3.40
E1	3.00	3.15	3.20
E2	2.39	2.49	2.59
e	0.65BSC		
H	0.30	0.39	0.50
L	0.30	0.40	0.50
L1	-	0.13	-
M	*	*	0.15
θ		10°	12°

Attention

■ Any and all HUA XUAN YANG ELECTRONICS products described or contained herein do not have specifications that can handle applications that require extremely high levels of reliability, such as life-support systems, aircraft's control systems, or other applications whose failure can be reasonably expected to result in serious physical and/or material damage. Consult with your HUA XUAN YANG ELECTRONICS representative nearest you before using any HUA XUAN YANG ELECTRONICS products described or contained herein in such applications.

■ HUA XUAN YANG ELECTRONICS assumes no responsibility for equipment failures that result from using products at values that exceed, even momentarily, rated values (such as maximum ratings, operating condition ranges, or other parameters) listed in products specifications of any and all HUA XUAN YANG ELECTRONICS products described or contained herein.

■ Specifications of any and all HUA XUAN YANG ELECTRONICS products described or contained herein stipulate the performance, characteristics, and functions of the described products in the independent state, and are not guarantees of the performance, characteristics, and functions of the described products as mounted in the customer’s products or equipment. To verify symptoms and states that cannot be evaluated in an independent device, the customer should always evaluate and test devices mounted in the customer’s products or equipment.

■ HUA XUAN YANG ELECTRONICS CO.,LTD. strives to supply high-quality high-reliability products. However, any and all semiconductor products fail with some probability. It is possible that these probabilistic failures could
give rise to accidents or events that could endanger human lives, that could give rise to smoke or fire, or that could cause damage to other property. When designing equipment, adopt safety measures so that these kinds of accidents or events cannot occur. Such measures include but are not limited to protective circuits and error prevention circuits for safe design, redundant design, and structural design.

■ In the event that any or all HUA XUAN YANG ELECTRONICS products(including technical data, services) described or contained herein are controlled under any of applicable local export control laws and regulations, such products must not be exported without obtaining the export license from the authorities concerned in accordance with the above law.

■ No part of this publication may be reproduced or transmitted in any form or by any means, electronic or mechanical, including photocopying and recording, or any information storage or retrieval system, or otherwise, without the prior written permission of HUA XUAN YANG ELECTRONICS CO.,LTD.

■ Information (including circuit diagrams and circuit parameters) herein is for example only ; it is not guaranteed for volume production. HUA XUAN YANG ELECTRONICS believes information herein is accurate and reliable, but no guarantees are made or implied regarding its use or any infringements of intellectual property rights or other rights of third parties.

■ Any and all information described or contained herein are subject to change without notice due to product/technology improvement, etc. When designing equipment, refer to the "Delivery Specification" for the HUA XUAN YANG ELECTRONICS product that you intend to use.

Unikeyic Electronics

Global Electronic Components Distributor

Click to view pricing, inventory, delivery, and lifecycle information:

HXY MOSFET:

BZT52C13 SD15C TPSMB100CA-VR HAD8542ARZ HC4D20120A SS5150B HOPA2340UA HT7540-1
SQJA04EP-T1_BE3 SS10100 IRLML6246PBF SS1045 HC3D10170A HESDNC5VB1AF-B HMCP602-I/SN
HXY8205ES TPSMB28A-VR BZT52C3V3S HT7150 HXY2101EI MMBT3904T US2M HXY2300MI
MAX487ESA P6SMB200A P6SMB36CA PESD5V0S1BB SS510C DTC143ZE P6SMB33CA