

KISSLING
BATTERY DISCONNECTOR

Series 35 / 500A - from TE Connectivity (TE)

Our manually operated battery disconnector up to 500 amps meets the most demanding requirements in all vehicle applications. The nominal current ratings refer to continuous DC current at up to 100% duty cycle and the switches are built to switch under full load.

TE Connectivity's (TE) battery disconnector can handle up to five times the continuous current level for up to 10 seconds as overload current. (Overload current of 1000 amps for 30 seconds)

All series 35 battery disconnectors are sealed with a technology that meets the IP67 and IP6K9K (steam cleaning) standards and the switches are designed to operate at temperatures between -40°C and +85°C.

Options include single or dual pole configurations, various mounting and locking (security) alternatives as well as different shapes and colors of the operating handles.

Battery disconnectors from our KISSLING product family are able to be operated under fall load, to ensure a safe disconnection from the battery in emergency conditions. The range also has optional protection against theft or unauthorized use of vehicles or equipment by removable or lockable operating elements.

Features

- Sealed housing conforms to IP6K9K
- Robust design
- 6G shock and 4G vibration resistant
- Main contact current rated for continuous current and 100% duty cycle
- Battery disconnect under load in case of an emergency
- Variable or scalable mounting options
- Safety in the vehicle service by so called "LOCK" options

Applications

- Truck
- Bus
- Ground support vehicles
- Construction and agricultural vehicles
- Railway
- Aircraft

Specification

Technical Data

Temperature range	-40°C to +85°C
Protection	IP67 / IEC 529
Vibration	4g (50 - 2000Hz)
Shock	6g, 11msec
Thread sizes / Torque	M10 = 15 – 20Nm | M12 = 18 – 22Nm

Electrical Data

Min. insulation resistance	100MΩ
Dielectric withstanding voltage	1050V / 1 min at 50Hz
Max. contact drop max. load	150mV
Voltage range	up to 32V
Duty rating continuous	500A
Overload	1500A - 240sec / 2000A - 90sec / 2500A - 10sec.
Wire section	min. 250mm²
Mounting position	optional

Available Keys

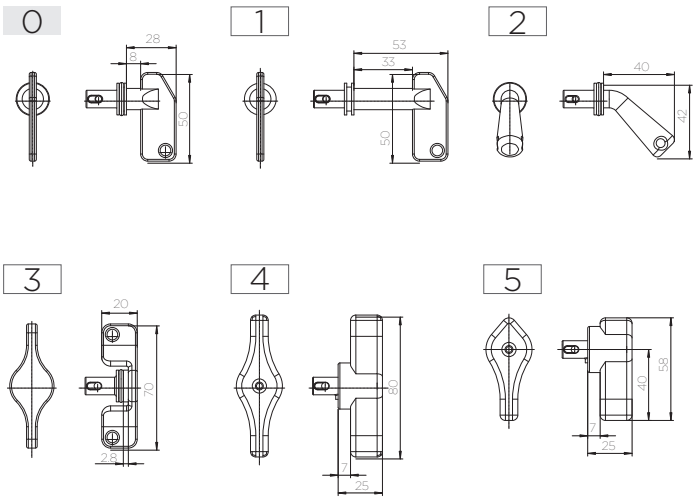

Key Options

0	Standard
1	Standard long
2	45° turn off
3	T-handle
4	Double wing
5	Pointer key

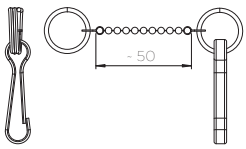

Key with chain

6	Standard
7	Standard long
8	45° turn off
9	T-handle

Keyholder

Not for switches with central mounting / optional available

1-pole

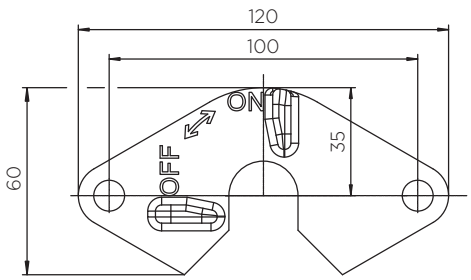

2-pole

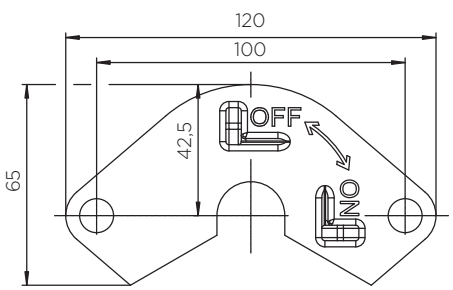

Technical drawings

1-pole with longflange

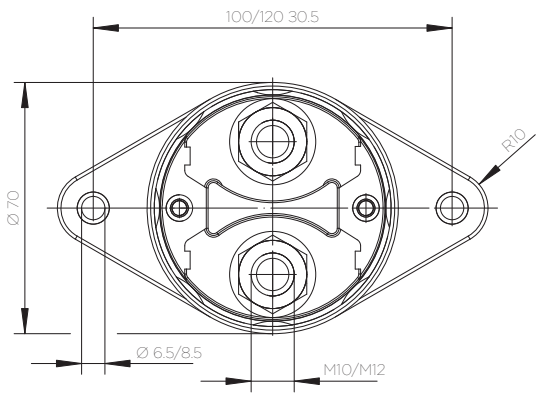

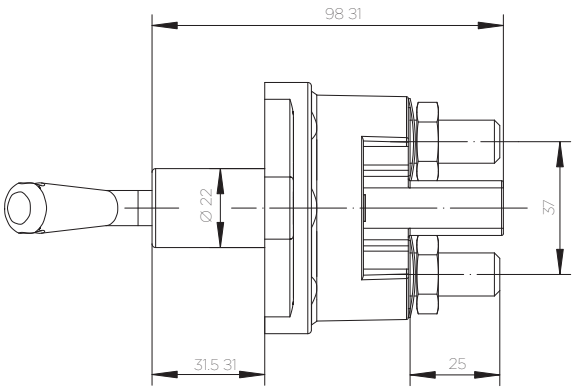

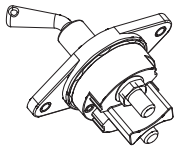

Circuit

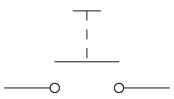

1-pole with central mounting

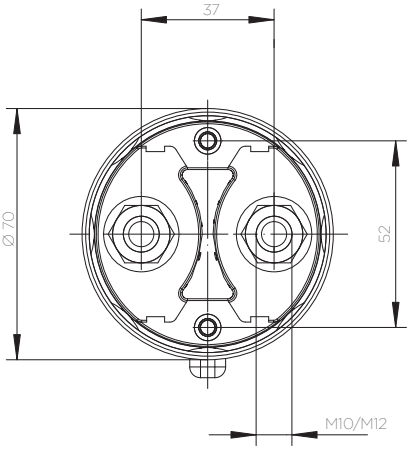

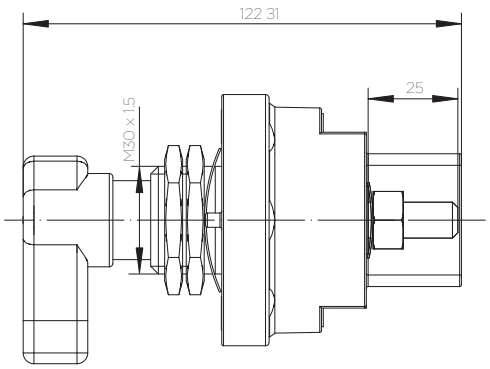

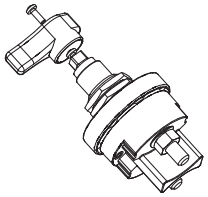

Circuit

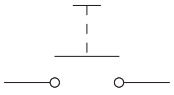

2-pole with longflange

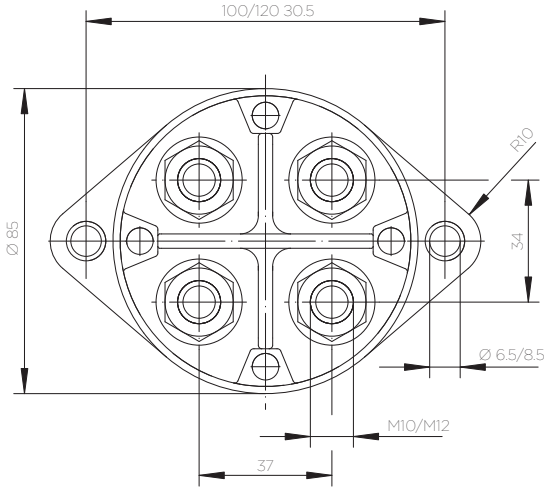

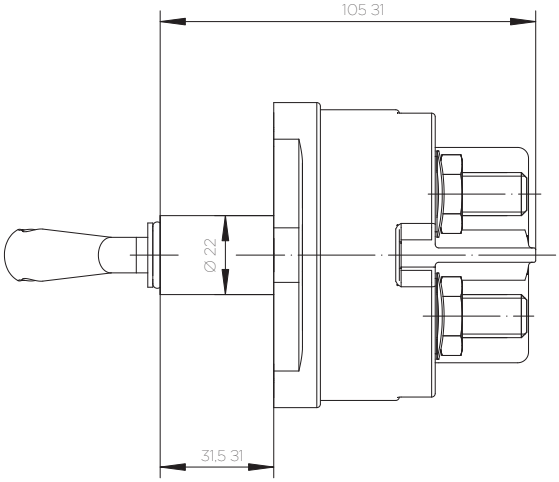

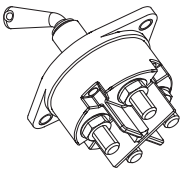

Circuit

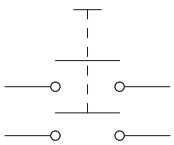

Ordering Information

Part Number
example: 35.510.000.R
35.___.___._.__

Current

5	Current 500A

No. Poles

1	1-pole
2	2-poles

Mounting options

1	Longflange 100 / Ø 6,5
2	Longflange 120 / Ø 6,5
3	Central mounting
4	Longflange 100 / Ø 8,5
5	Longflange 120 / Ø 8,5

Thread

1	M10
2	M12

Auxiliary contact (upon request)

A2	Auxiliary contact 2A
A5	Auxiliary contact 5A

Key colours

R	red
S	black
GN	green
GE	yellow

Key type

0	removable
1	not removable

Key options

X	see overview page 1

te.com

TE Connectivity, TE, TE connectivity (logo), KISSLING (logo) and KISSLING (word) are trademarks owned or licensed by the TE Connectivity family of companies. All other logos, products and/or company names referred to herein might be trademarks of their respective owners.

The information given herein, including drawings, illustrations and schematics which are intended for illustration purposes only, is believed to be reliable. However, TE Connectivity makes no warranties as to its accuracy or completeness and disclaims any liability in connection with its use. TE Connectivity's obligations shall only be as set forth in TE Connectivity's Standard Terms and Conditions of Sale for this product and in no case will TE Connectivity be liable for any incidental, indirect or consequential damages arising out of the sale, resale, use or misuse of the product. Users of TE Connectivity products should make their own evaluation to determine the suitability of each such product for the specific application.

© 2020 TE Connectivity | All Rights Reserved.
K1166712 | Version 08/2020

Unikeyic Electronics

Global Electronic Components Distributor

Click to view pricing, inventory, delivery, and lifecycle information:

TE Connectivity:

917696-1 CRGCQ0805F150R 1743455-2 1969656-1 917790-2 936348-1 1-1743284-2 1-794222-0 CRGCQ2010J3K3 2-520128-2 35402K7FT SMV3W5M6JT 2834055-1 3430B2F51RTDF 352116RFT 2-32562-2 2377783-2 650075-000 SMW73R0JT 141991-2 2-292161-3 3-1393225-0 640174-1 1488167-1 1MM-HU-D10-VS-00-F-TBP 2-520103-2 292230-8 1393431-1 281990-2 36161