MATERIAL NO.	ENGINEERING NO.	FINISHED LENGTH
1300102149	185030K03M010	1.00 M (3.28 FT)

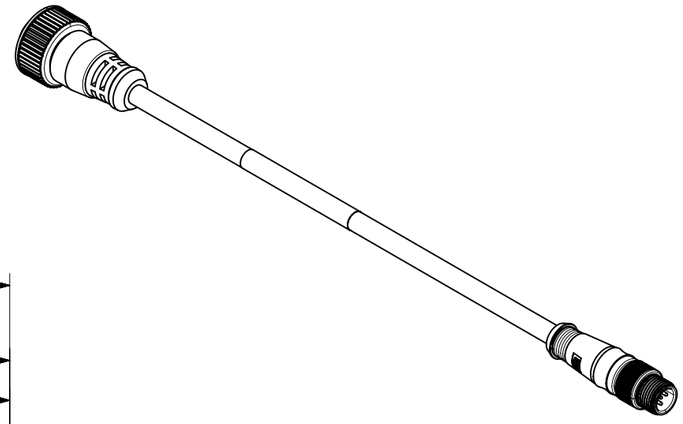

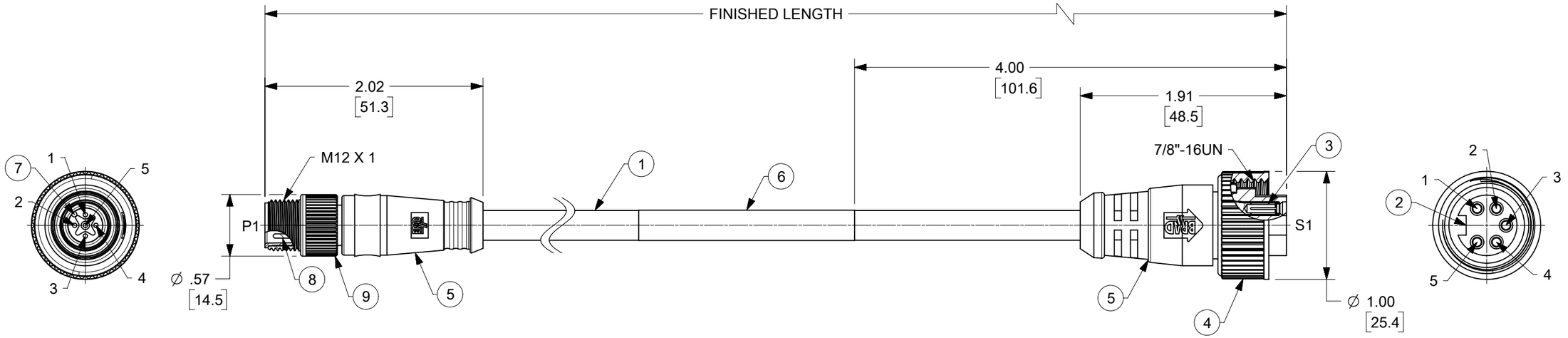



WIRING DIAGRAM

NOTES:

1. MATERIAL: SEE TABLE
2. FINISHES: SEE TABLE
3. ELECTRICAL SPECIFICATIONS
   VOLT AGE RATING: 250V AC/DC
   CURRENT RATING: 4 AMPS
4. PROTECTION: IP67 WHEN FULLY MATED
5. TEMPERATURE: -40°C TO +105°C
6. DIMS SHOWN ARE FOR REFERENCE ONLY UNLESS OTHERWISE SPECIFIED

ITEM	DESCRIPTION	MATERIAL	FINISH
9	MIC MALE COUPLER	DIE CAST ZINC	BLACK
8	PIN CONTACT	Cu ALLOY	GOLD PLATED
7	MIC INSERT 5P	NYLON	BLACK
6	WRAP LABEL	VINYL	BLACK/YELLOW
5	OVERMOLD	PVC	YELLOW
4	MC COUPLING NUT	DIE CAST ZINC	BLACK
3	CONTACT SOCKET	Cu ALLOY	GOLD PLATED
2	MC INSERT 5P	PVC	BLACK
1	CABLE #18-5	TPE	YELLOW

DOCUMENT STATUS	P1	RELEASE DATE	2018/10/02 16:56:25

185030K03M010

LENGTH
M001 = .1 METERS
M010 = 1.0 METERS
M100 = 10 METERS

PART NUMBER MATRIX

CABLE LENGTH TOLERANCES
>.3M [1FT]: +19mm-0 [+.75in-0]
.3 - .9M [1 - 3FT]: +44.5mm-0 [+1.75in-0]
.9 - 1.8M [3 - 6FT]: +55.6mm-0 [+2.19in-0]
1.8 - 3.7M [6 - 12FT: +88.9mm-0 [+3.50in-0]
3.7 - 7.3M [12 - 24FT]: +165.1mm-0 [+6.50in-0]
7.3-14.6M [24 - 48FT]: +317.5mm-0 [+12.50in-0]
14.6 - 30.5M [48-100FT]: +622.3mm-0 [+24.50in-0]
OVER 30M [100FT] +2% OF FINISHED LENGTH

SYMBOLS
E = 0
E = 0
E = 0
S = 0
▼ = 0
C = 0
☒ = 0
■ = 0
▽ = 0

THIS DRAWING CONTAINS INFORMATION THAT IS PROPRIETARY TO MOLEX ELECTRONIC TECHNOLOGIES, LLC AND SHOULD NOT BE USED WITHOUT WRITTEN PERMISSION

DIMENSION UNITS: HYBRID
SCALE: 1:1
GENERAL TOLERANCES (UNLESS SPECIFIED)
ANGULAR TOL ± °
4 PLACES ±
3 PLACES ±
2 PLACES ±
1 PLACE ±
0 PLACES ±
DRAFT WHERE APPLICABLE MUST REMAIN WITHIN DIMENSIONS

CURRENT REV DESC: RELEASE

EC NO: 604623
DRWN: MZIELINSKI 2018/09/18
CHK'D: CCHRASTKA 2018/09/25
APPR: BWOODMAN 2018/10/02

INITIAL REVISION:
DRWN: MZIELINSKI 2018/09/18
APPR: BWOODMAN 2018/10/02

THIRD ANGLE PROJECTION
DRAWING: B-SIZE
SERIES: 130010

molex

MC/MIC M/MFE 5P STR #18-5 TPE
#18-3 FEMALE 4-POLE

PRODUCT CUSTOMER DRAWING

DOCUMENT NUMBER	DOC TYPE	DOC PART	REVISION
1300102149	PSD	000	A

MATERIAL NUMBER	CUSTOMER	SHEET NUMBER
SEE CHART	CISCO	1 OF 1

FORMAT: master-tb-prod-B
REVISION: H
DATE: 2018/01/18

Unikeyic Electronics

Global Electronic Components Distributor

Click to view pricing, inventory, delivery, and lifecycle information:

molex:

0351510214 194270031 347928042 197054301 348268126 349672001 357470310 5023860371
502584-0870 502585-0370 502584-1060 0464363133 0477256010 194290039 194290026 347910140
528520870 348242245 351820290 459850483 502380-0800 528061110 347072012 355240920
464373005 503988100 0194360214 197134001 34708-2028 528523070