1.电路CIRCUIT:ON/OFF
2.快插端子QUICK CONNECTOR TYPE;
单刀单掷(SINGLE POLE SINGLE THROW);
3.额定值RATING:16A 125/250VAC (UL;C-UL);
12A 125/250VAC (UL;C-UL);
16(4)A 250V~T125/55(ENEC17;NEMKO;CQC;CB)
4.柄的颜色ACTUATOR COLOR: 黑色BLACK
基座的颜色HOUSING COLOR: 黑色BLACK
5.柄的印字形式ACTUATOR PRINTING:" I/O " 白色WHITE COLOR
6.所有部件均使用环保材料
ALL MATERIALS USE IN CONFORMIY WITH THE RoHS DIRECTIVE

SCHEMATIC

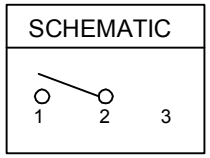

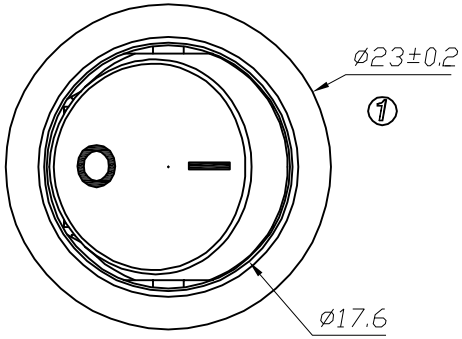

PANEL CUTOUT DIMENSION,PANEL THICKNESS 0.8~1.2mm

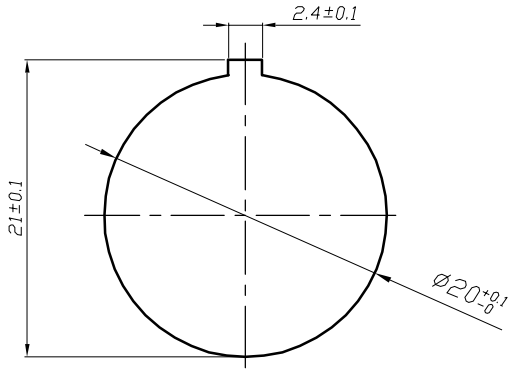

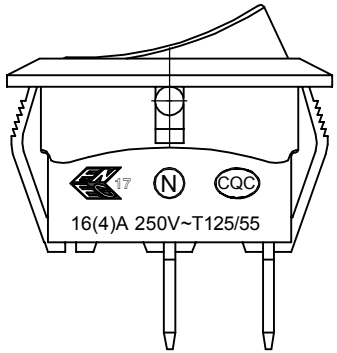

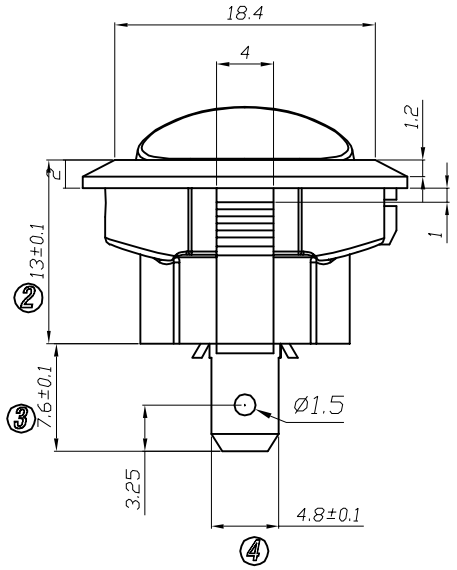

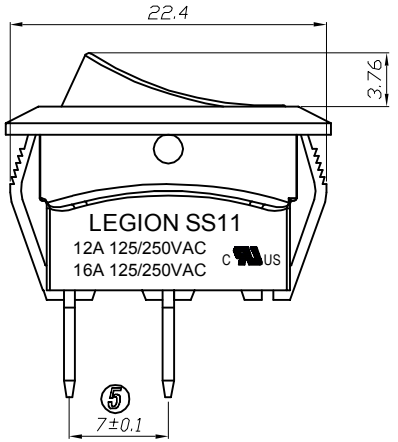

NO	DESCRIPTION	NO	DESCRIPTION
5	→	10	→
4	→	9	→
3	→	8	→
2	→	7	→
1	→	6	→

DIMENSIONAL TOLERANCES	
RANGE	TOLERANCE
X	±0.30
X.X	±0.20
X.XX	±0.10
ANGLES	±1°

APPROVED	CHECKED	DESIGN	DRAWN
			LMC 2019.05.20

LEGION ELECTRONIC & HARDWARE CO., LTD.

ALL SIZE ARE IN	MM
SCALE	NO
MAT'L	***
MATERIAL NO.	SS11-BBIWQ-RR20-R
DRAWING NO.	*****
REV.	A0