0.30MM CENTER FFC JUMPER CABLE CHART

"A" DIM.	2 ± .08 INCHES 51 ± 2 MM	4 ± .16 INCHES 102 ± 4 MM	6 ± .16 INCHES 152 ± 4 MM	8 ± .20 INCHES 203 ± 5 MM	10 ± .20 INCHES 254 ± 5 MM	12 ± .20 INCHES 305 ± 5 MM
CKTS: 7	150310207	150310407	150310607	150310807	150311007	150311207
CKTS: 9	150310209	150310409	150310609	150310809	150311009	150311209
CKTS: 11	150310211	150310411	150310611	150310811	150311011	150311211
CKTS: 15	150310215	150310415	150310615	150310815	150311015	150311215
CKTS: 21	150310221	150310421	150310621	150310821	150311021	150311221
CKTS: 25	150310225	150310425	150310625	150310825	150311025	150311225
CKTS: 31	150310231	150310431	150310631	150310831	150311031	150311231
CKTS: 33	150310233	150310433	150310633	150310833	150311033	150311233
CKTS: 35	150310235	150310435	150310635	150310835	150311035	150311235
CKTS: 37	150310237	150310437	150310637	150310837	150311037	150311237
CKTS: 39	150310239	150310439	150310639	150310839	150311039	150311239
CKTS: 41	150310241	150310441	150310641	150310841	150311041	150311241
CKTS: 51	150310251	150310451	150310651	150310851	150311051	150311251
CKTS: 61	150310261	150310461	150310661	150310861	150311061	150311261

NOTES:
1. SUBSTRATE AND COVERLAY MATERIAL IS .001" [25uM] POLYIMIDE.
2. CONDUCTOR IS 1/2 OZ (.0007") [18um] COPPER.
3. PLATING IS 2 MICRO INCHES MINIMUM OF HARD GOLD OVER 100 MICRO INCHES MINIMUM OF NICKEL.
4. TAIL ENDS ARE .008±.001 [0.20±0.03] THICK.
5. JUMPER CABLES ARE SUITABLE FOR USE WITH MOLEX 504754 SERIES CONNECTOR.

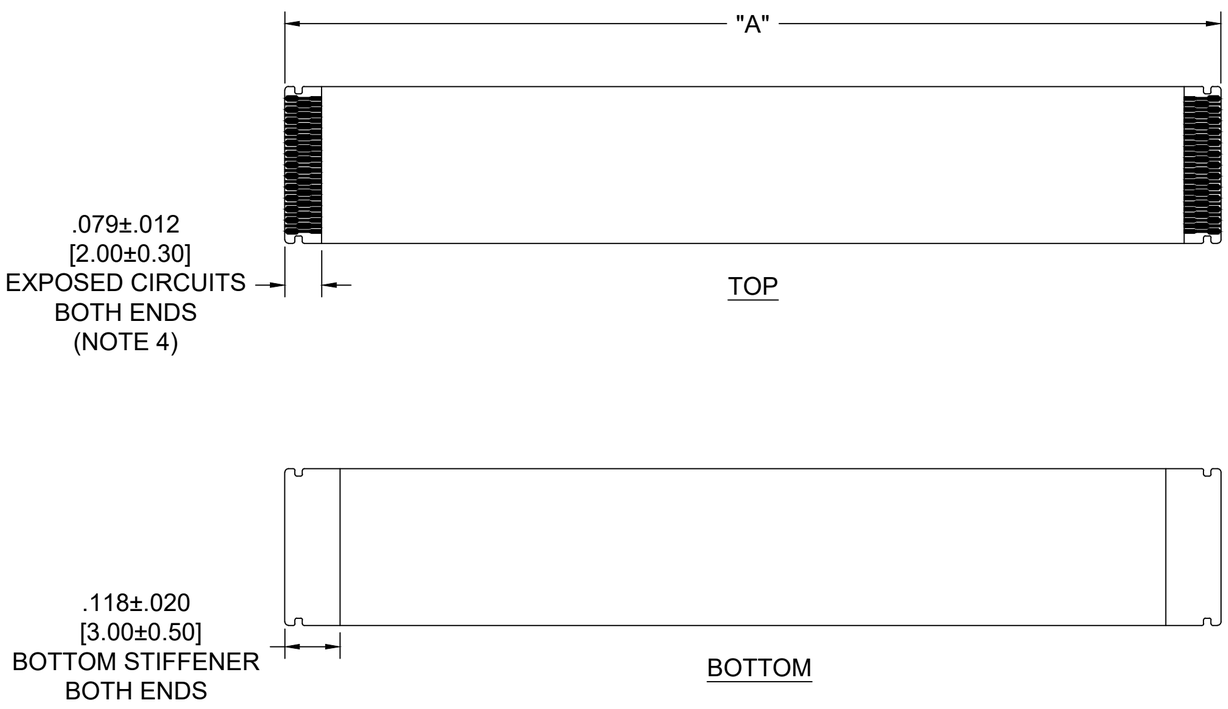

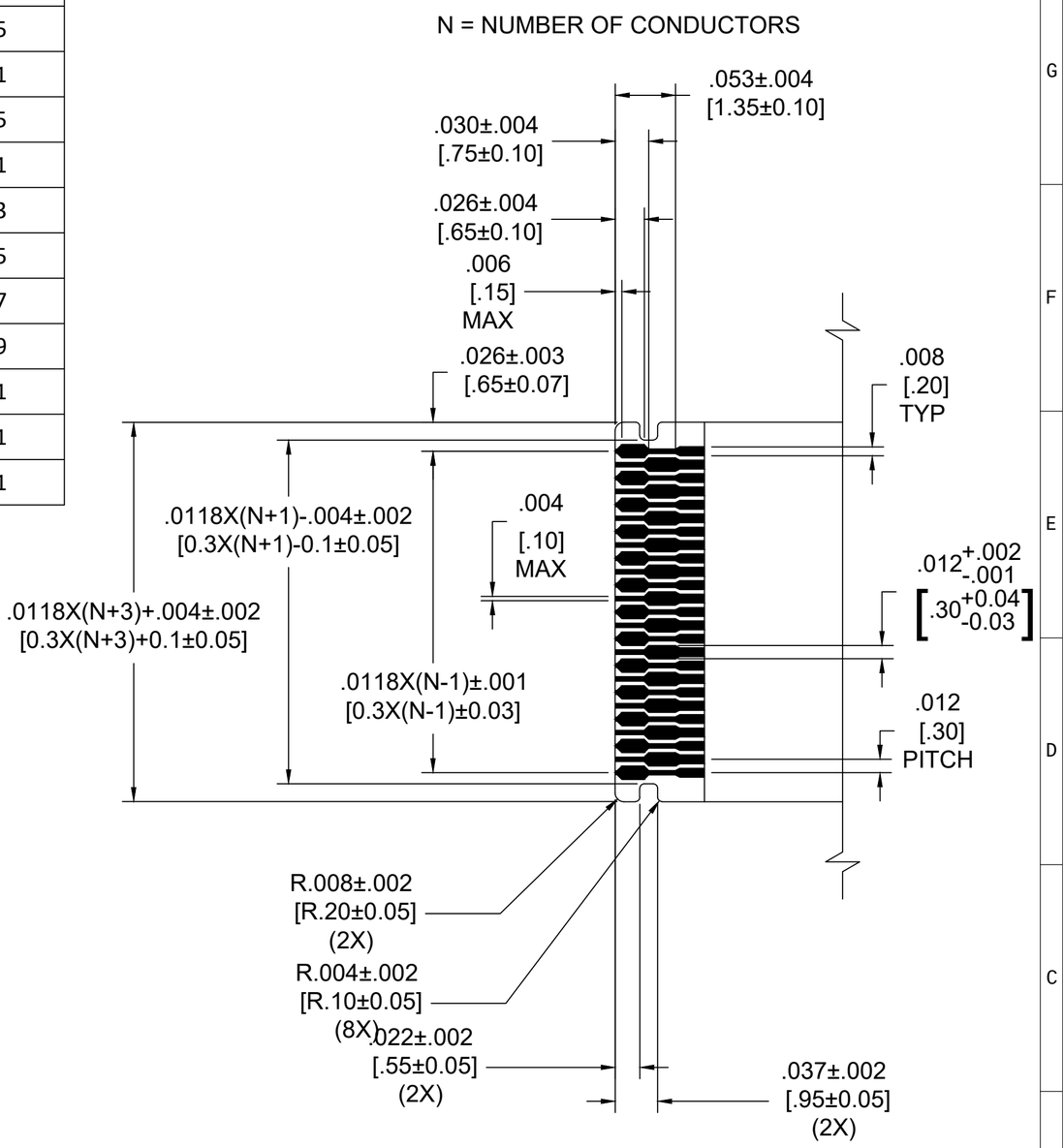

JUMPER END DETAIL
25 CIRCUIT SHOWN
(SCALE 10:1)

THIS DRAWING CONTAINS INFORMATION THAT IS PROPRIETARY TO MOLEX ELECTRONIC TECHNOLOGIES, LLC AND SHOULD NOT BE USED WITHOUT WRITTEN PERMISSION

FUNCTIONAL SYMBOLS
FA=0
FC=0
FP=0
DIVISIONAL SYMBOLS

DIMENSION UNITS: MM/INCH
SCALE: 4:1

GENERAL TOLERANCES (UNLESS SPECIFIED)

	mm	INCH
4 PLACES	±----	±----
3 PLACES	±----	±0.01
2 PLACES	±----	±0.03
1 PLACE	±----	±----
0 PLACES	±----	±----
ANGULAR TOL ± 1.0 °		

DRAFT WHERE APPLICABLE MUST REMAIN WITHIN DIMENSIONS

CURRENT REV DESC: PRODUCTION RELEASE

EC NO: 701160
DRWN: MIMIG 2022/03/28
CHK'D: JSMITH11 2022/03/30
APPR: JSMITH11 2022/03/30

INITIAL REVISION:
DRWN: MIMIG 2022/03/28
APPR: JSMITH11 2022/03/30

molex

.3MM PITCH
JUMPER CABLES

PRODUCT CUSTOMER DRAWING

DOCUMENT NUMBER	DOC TYPE	DOC PART	REVISION
150310001	PSD	000	A

THIRD ANGLE PROJECTION | DRAWING: C-SIZE | SERIES: 15031 | MATERIAL NUMBER: SEE CHART | CUSTOMER: GENERAL MARKET | SHEET NUMBER: 1 OF 1

DOCUMENT STATUS	P1	RELEASE DATE	2022/03/30 23:34:44

FORMAT: IN-ACAD-tb-prod-C
REVISION: A1
DATE: 2019/06/12

Unikeyic Electronics

Global Electronic Components Distributor

Click to view pricing, inventory, delivery, and lifecycle information:

molex:

347072012 348268126 349672001 528523070 194290026 194270031 197054301 502584-1060
528520870 0477256010 502380-0800 502584-0870 0194360214 34708-2028 347910140 464373005
503988100 347928042 357470310 502585-0370 348242245 351820290 5023860371 528061110
0351510214 0464363133 197134001 355240920 459850483 194290039