Rev No.	Description of Revision	Date	Name	Approved	ECN No.

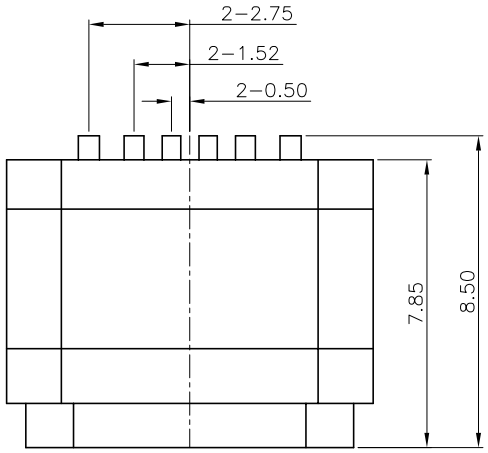



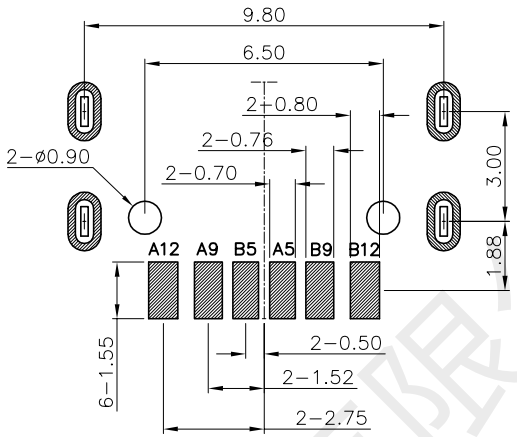

RECOMMENDER P.C.B LAYOUT TOP VIEW
(GENERAY TOLERANCE ±0.05)

NOTE:
1.MATERIAL SPECIFICATION:
1.HOUSING:HIGH TEMPERATURE RESISTANT PLASTIC,UL94 V-0.
2.CONTACTS:COPPER ALLOY
3.MID PLATE: STAINLESS STEEL
4.FRONT SHELL: STAINLESS STEEL
2.PLATING SPECIFICATION:
2-1.CONTACTS:
Ni 50u" MIN. UNDER PLATED OVER ALL.
Au PLATED ON THE FUNCTIONAL AREA OF CONTACT.
(GOLD PLATING THICKNESS FOLLOW THE P/N)
PLATING SPECIFICATIONS OF THE SOLDER AREA FOLLOW THE P/N
2-2.FRONT SHELL:
SEE TABLE1.
2-3.SHIELD PLATE&EMI PLATE:
CLEAR ONLY
3.MECHANICAL PERFORMANCE,
3-1.INSERTION FORCE: 0.5~2.0kgf.
3-2.REMOVAL FORCE: 0.8kgf~2.0kgf.
3-3.DURABILITY: 10000 CYCLES.
4.ELECTRICAL PERFORMANCE,
4-1. CURRENT RATING: 3.0A
VOLTAGE RATING: 5.0V
4-2. LLCR:
VBUS & GND PINS AND OTHER PINS: 40mΩ/PIN MAX.
SHIELD: 50mΩ/MAX.
LLCR MAX. CHANGE OF ALL PINS: 10mΩ.
4-3.INSULATION RESISTANCE: 100MΩ MIN
4-4.DIELECTRIC WITHSTAND VOLTAGE,AC 100V FOR 1 MINUTE.
5. ENVIRONMENTAL PERFORMANCE:
OPERATING TEMPERATURE: -25°C~+85°C.
6.IR REFLOW:
THE PEAK TEMPERATURE ON THE BOARD SHALL BE MAINTAINED FOR 10 SECONDS AT 260°C.

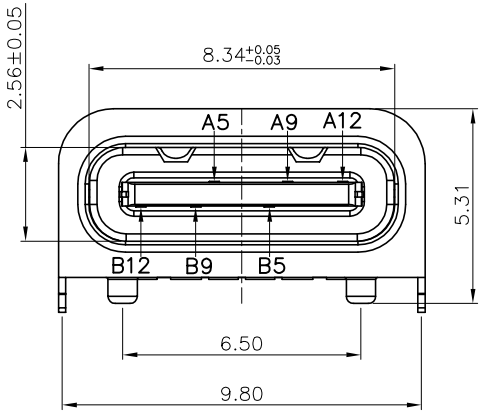

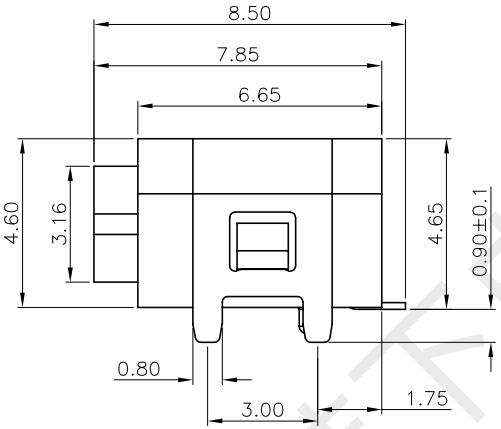

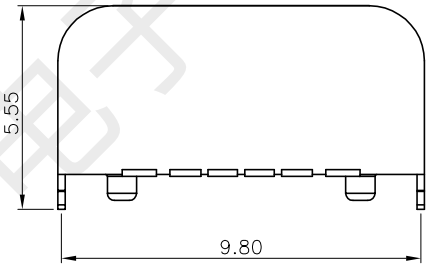

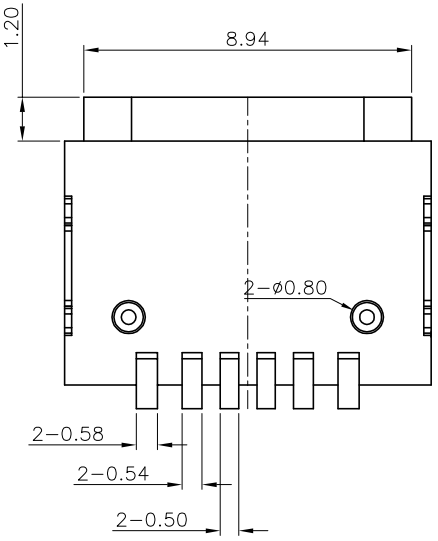

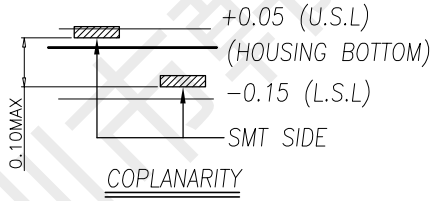

COPLANARITY

PIN ASSIGNMENTS

A5	CC1	B12	GND
A9	VBUS	B9	VBUS
A12	GND	B5	CC2
PIN	SIGNAL NAME	PIN	SIGNAL NAME

带防水圈示意图：

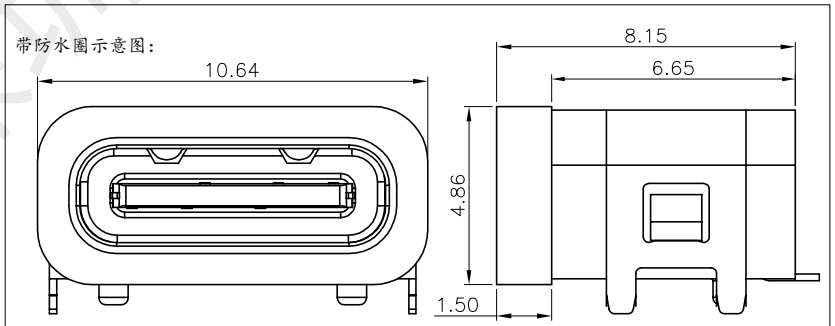

UNLESS OTHERWSE SPECIFED TOLERANCES							
DECIMALS:		ANGLES		深圳市韩下电子有限公司			
X.	±0.30	X°.	±2°	TITLE: HX-TYPE-C 6P IPX6-B1.2-L7.85			
X.X	±0.25	X.X°	±1°	Drdwn: 黄彬	PART NO.		
X.XX	±0.15	X.XX°	±0.5°	Checked: 张伟	SCALE: 1:5	UNIT: mm	PROJ.
X.XXX	±0.05			Approved: 罗小春	SIZE: A4	SHEET: 1 OF 1	REV: A
				CUSTOMER COPY			

深圳市韩下电子有限公司

深圳市韩下电子有限公司
Shenzhen Hanxia Electronic Co., Ltd
Tel: 0755-23086569

承　认　书

SPECIFICATION FOR APPROVAL

产 品 编 码
Material code: _____

产品名称 Project：USB连接器

规格型号 Part No：HX-TYPE-C 6P IPX6-B1.2-L7.85

贵公司承认印 Approal slgnatures

料 号/Part No.	签　章/Signatures

日期 Date:

拟制/Drawn	黄彬	深圳市韩下电子有限公司 工程专用章
审核/Check	张伟	
批准/Approved	罗小春	

深圳市韩下电子有限公司