N-Channel Super Trench Power MOSFET

Features

- VDS= 150V, ID= 5.1A
  RDS(ON) < 55 mΩ @ VGS = 10V
  RDS(ON) < 65 mΩ @ VGS =4.5V

General Features

- Advanced Trench Technology
- Provide Excellent RDS(ON) and Low Gate Charge
- Lead Free and Green Available

100% UIS TESTED!
100% ΔVds TESTED!

RoHS

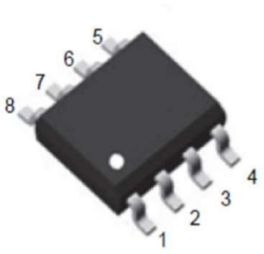

SOP-8



pin assignment

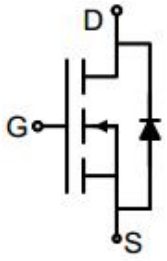

Schematic diagram

Absolute Maximum Ratings (T_A=25℃unless otherwise noted)

Parameter		Symbol	Limit	Unit
Drain-Source Voltage		V_{DS}	150	V
Gate-Source Voltage		V_{GS}	±20	V
Drain Current-Continuous		I_D	5.1	A
Drain Current-Continuous(T_C=100℃)		I_D (100℃)	3.6	A
Pulsed Drain Current(Note 1)		I_{DM}	20	A
Single pulse avalanche energy (Note 5)		E_{AS}	60	mJ
Maximum Power Dissipation	T_C = 25 °C	P_D	5	W
	T_A = 25 °C		3	W
Operating Junction and Storage Temperature Range		T_J,T_{STG}	-55 To 150	℃

Thermal Characteristic

Thermal Resistance, Junction-to-Ambient(Note 2)	$R_{\theta JA}$	41.7	℃/W
Thermal Resistance, Junction-to-Case(Note 2)	$R_{\theta JC}$	25	

Electrical Characteristics (T_A=25℃unless otherwise noted)

Parameter	Symbol	Condition	Min	Typ	Max	Unit
Off Characteristics						
Drain-Source Breakdown Voltage	BV_{DSS}	V_{GS}=0V I_D=250μA	150	-	-	V
Zero Gate Voltage Drain Current	I_{DSS}	V_{DS}=150V,V_{GS}=0V	-	-	1	μA
Gate-Body Leakage Current	I_{GSS}	V_{GS}=±20V,V_{DS}=0V	-	-	±100	nA
On Characteristics (Note 3)						
Gate Threshold Voltage	$V_{GS(th)}$	V_{DS}=V_{GS},I_D=250μA	2.0		4.5	V
Drain-Source On-State Resistance	$R_{DS(ON)}$	V_{GS}=10V, I_D=5.1A	-		55	mΩ
Forward Transconductance	g_{FS}	V_{DS}=5V,I_D=5.1A	-	12.5	-	S
Dynamic Characteristics (Note4)						
Input Capacitance	C_{lss}	V_{DS}=75V,V_{GS}=0V, F=1.0MHz	-	618	850	PF
Output Capacitance	C_{oss}		-	81	105	PF
Reverse Transfer Capacitance	C_{rss}		-	6.5	9	PF
Switching Characteristics (Note 4)						
Turn-on Delay Time	$t_{d(on)}$	V_{DD}=75V, I_D=5.1A V_{GS}=10V,R_G=3Ω	-	12.8	14	nS
Turn-on Rise Time	t_r		-	1.4	8.5	nS
Turn-Off Delay Time	$t_{d(off)}$		-	12.5	21	nS
Turn-Off Fall Time	t_f		-	2.5	8.0	nS
Total Gate Charge	Q_g	V_{DS}=75V,I_D=5.1A, V_{GS}=10V	-	12.8	18.0	nC
Gate-Source Charge	Q_{gs}		-	5		nC
Gate-Drain Charge	Q_{gd}		-	3.6		nC
Drain-Source Diode Characteristics						
Diode Forward Voltage (Note 3)	V_{SD}	V_{GS}=0V,I_S=5.1A	-	-	1.2	V
Diode Forward Current (Note 2)	I_S		-	-	5.1	A
Reverse Recovery Time	t_{rr}	T_J = 25°C, I_F = I_S di/dt = 100A/μs (Note3)	-	58	95	nS
Reverse Recovery Charge	Qrr		-	69	110	nC

Notes:

1. Repetitive Rating: Pulse width limited by maximum junction temperature.

2. The value of $R_{\theta JA}$ is measured with the device mounted on 1in2 FR-4 board with 2oz. Copper, in a still air environment with T_A =25°C. The value in any given application depends on the user's specific board design.

3. Pulse Test: Pulse Width ≤ 300μs, Duty Cycle ≤ 2%.

4. Guaranteed by design, not subject to production

5. EAS condition : Tj=25℃,V_{DD}=50V,V_G=10V,L=0.5mH,Rg=25Ω

Test Circuit

1) E_{AS} test Circuit

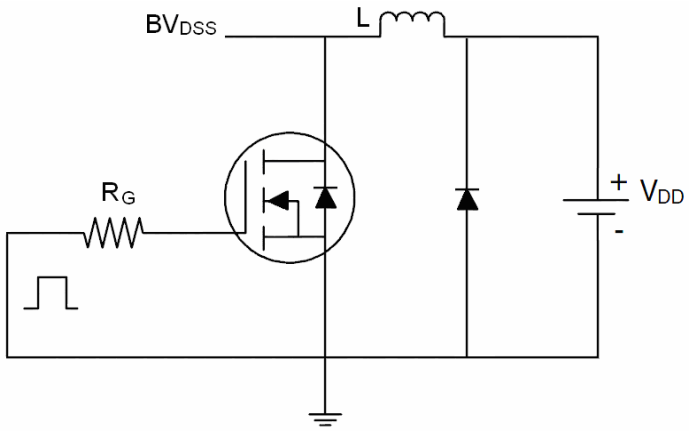

2) Gate charge test Circuit

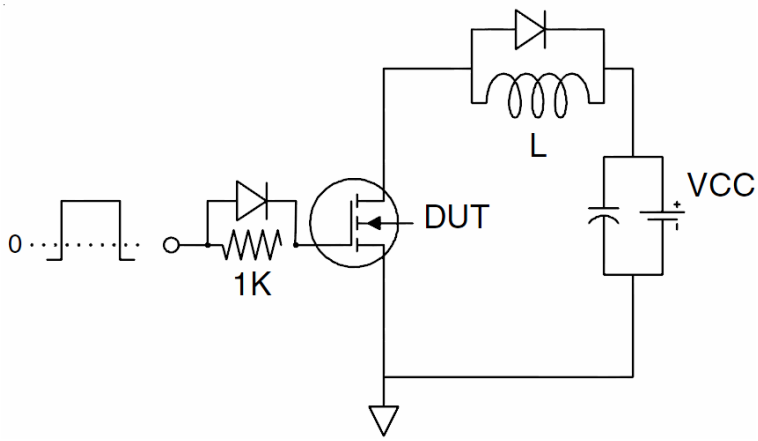

3) Switch Time Test Circuit

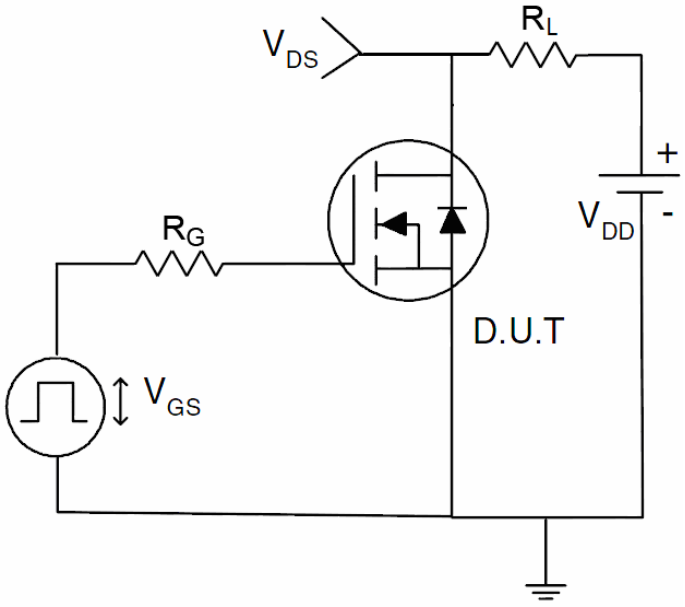

Typical Electrical and Thermal Characteristics (Curves)

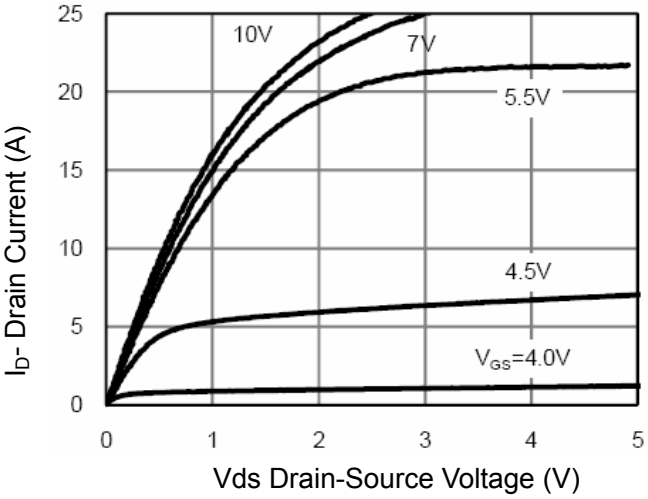

Figure 1 Output Characteristics

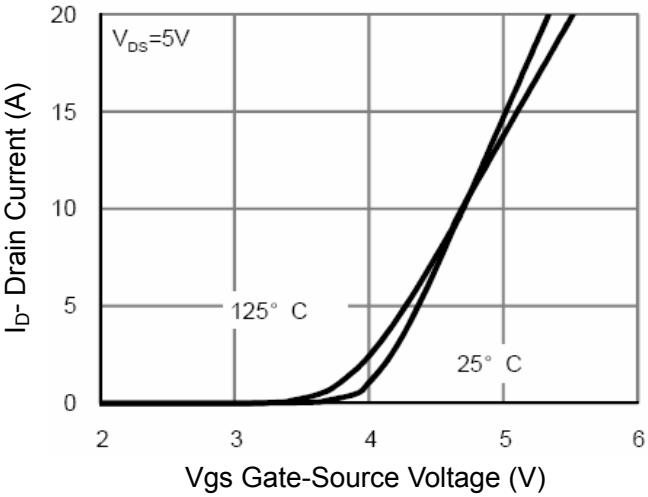

Figure 2 Transfer Characteristics

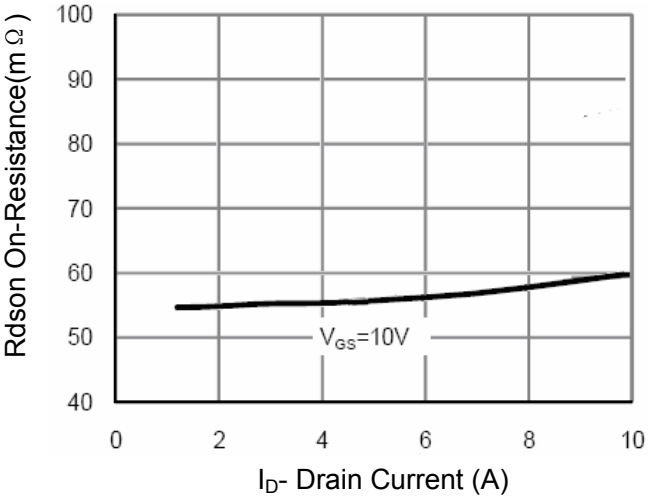

Figure 3 Rdson- Drain Current

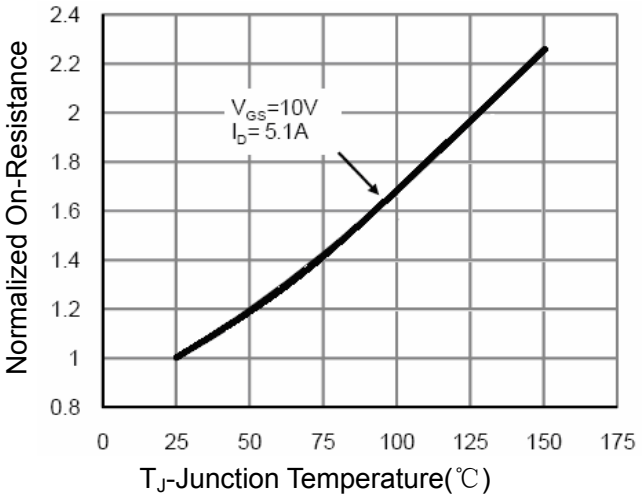

Figure 4 Rdson-JunctionTemperature

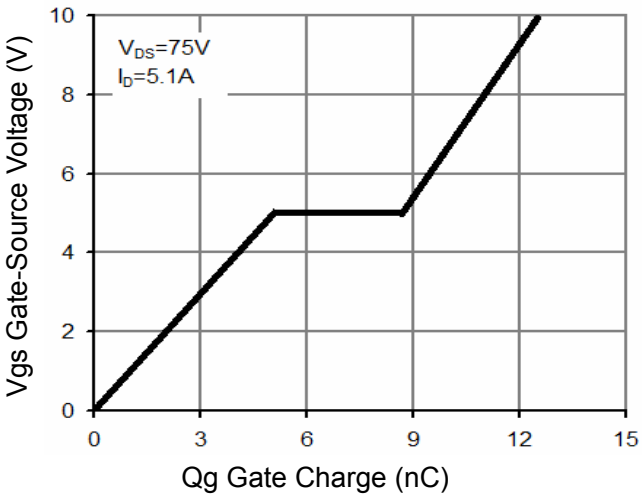

Figure 5 Gate Charge

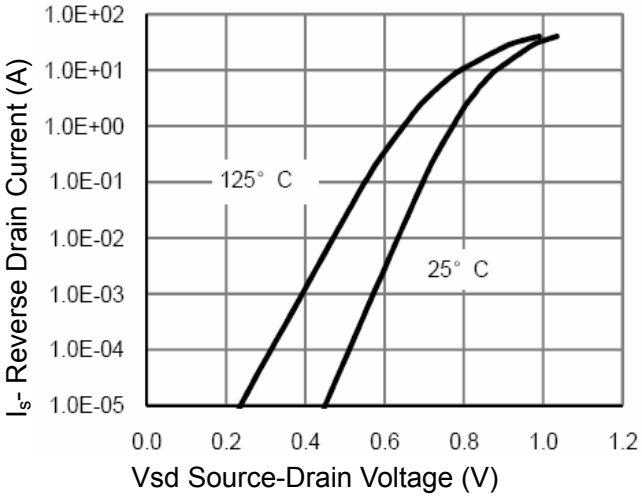

Figure 6 Source- Drain Diode Forward

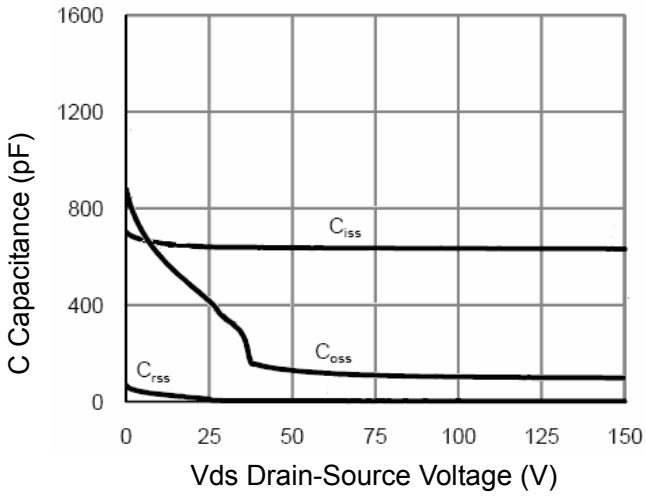

Figure 7 Capacitance vs Vds

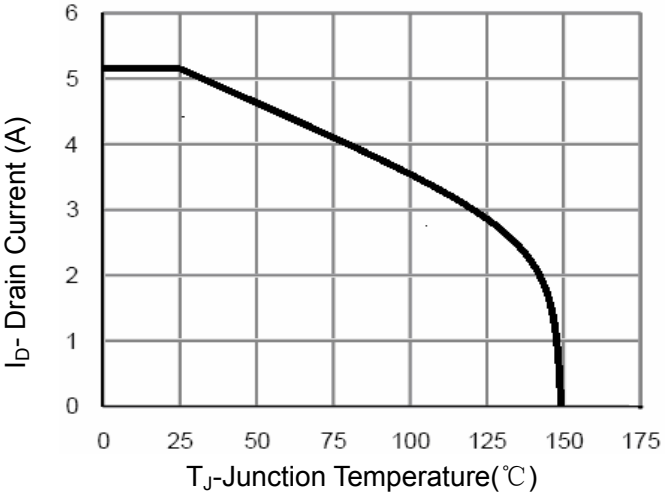

Figure 9 Current De-rating

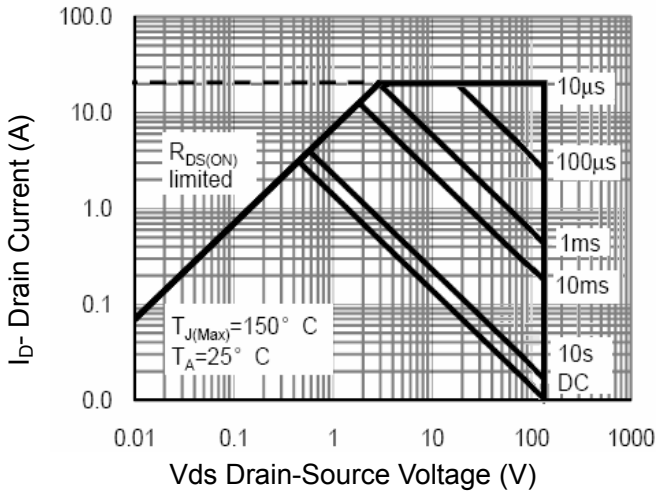

Figure 8 Safe Operation Area

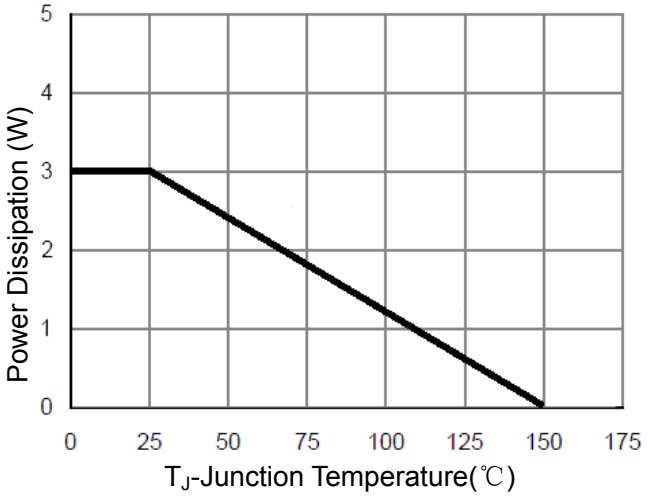

Figure 10 Power De-rating

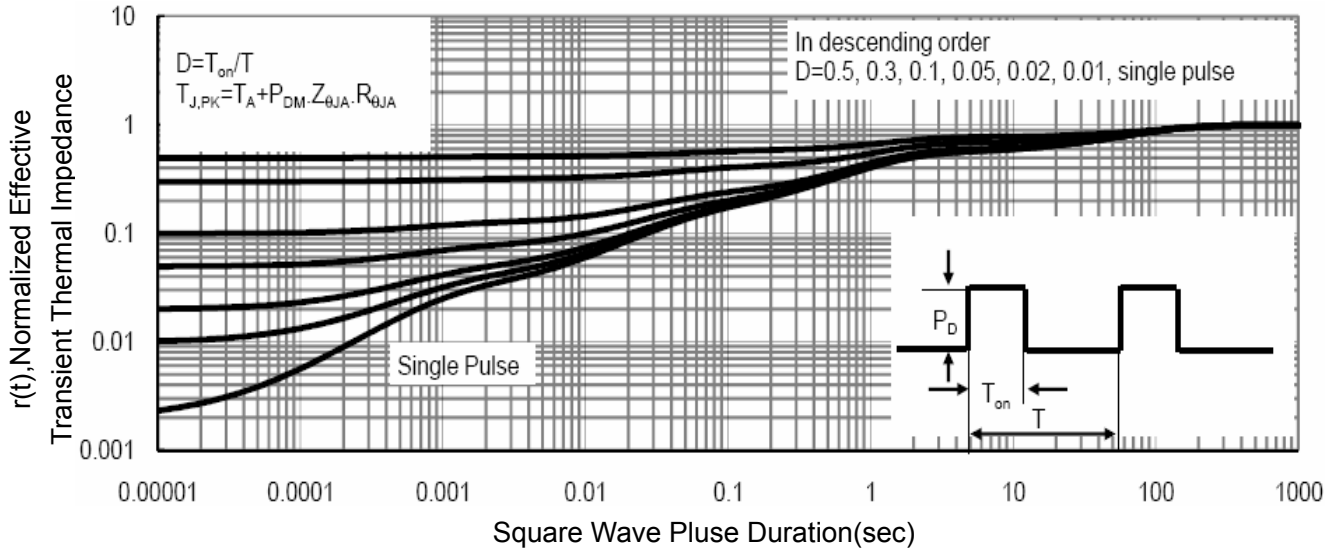

Figure 11 Normalized Maximum Transient Thermal Impedance