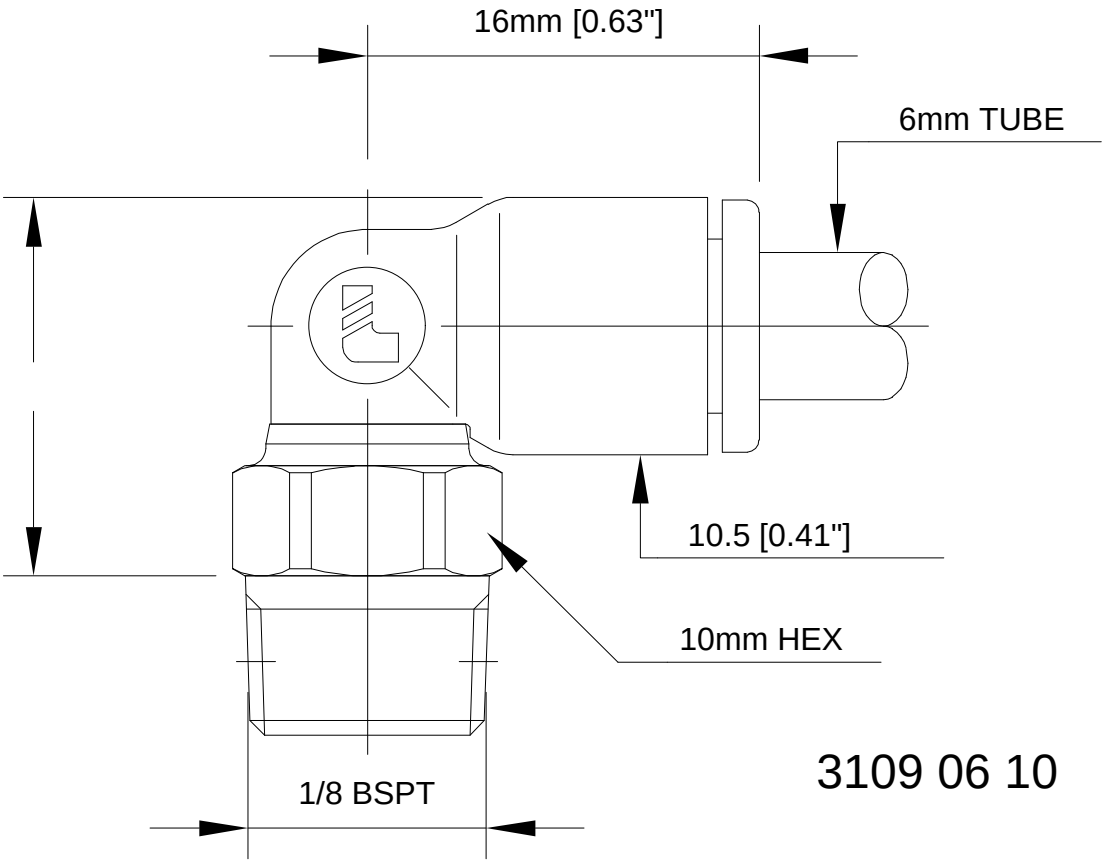

3109 06 10

Legris has a policy of continual product development and reserves the right to change dimensions or specifications without prior notification.

Nous nous reservons le droit d`apporter toute modification dans la conception et la realisation de nos materiels.
Nos cotes sont donnees a titre indicatif.

Unikeyic Electronics

Global Electronic Components Distributor

Click to view pricing, inventory, delivery, and lifecycle information:

legris:

1100P10 00 18KPTF08APX 18SFIW17SXN 25SBAW10MPN 3666 10 12 0432 07 13 3103 12 21
3866 06 08 3866 08 10 30SFIW13SXN 3193 08 13 3199 16 17 3320 04 00 07 0168 21 10 0682 00 27
1100P08 00 21KAAW13RVX 21SFAW13MXN 26KPAW21APX 7800 06 13 0158 21 21 0677 00 21
25SFAW21SXZ 30KAIW17SPN 3604 12 00 0916 00 13 1823 07 10 26KPTF13APX 3104 16 12 3669 06 10