# Dual N-channel Enhancement Mode Power MOSFET

## Features

- $V_{DS}$= 30V, $I_D$= 6.5 A
  $R_{DS(ON)}$ < 25 mΩ @ $V_{GS}$ = 10V
  $R_{DS(ON)}$ < 27 mΩ @ $V_{GS}$ = 4.5V

## General Features

- Advanced Trench Technology
- Provide Excellent RDS(ON) and Low Gate Charge
- Lead Free and Green Available

*100% UIS TESTED!*
*100% ΔVds TESTED!*

RoHS

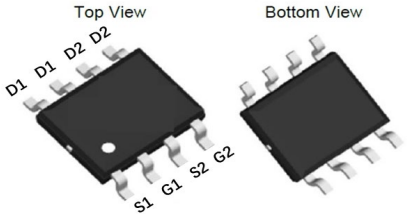


SOP-8 (Dual)




Pin Assignment

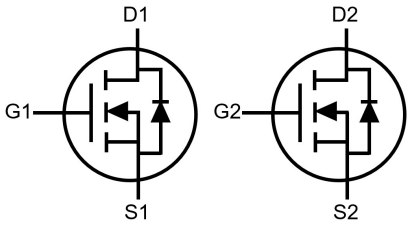


Schematic diagram

## Absolute Maximum Ratings ($T_A$=25℃unless otherwise noted)

| Parameter | ymbol | Limit | Unit |
|---|---|---|---|
| Drain-Source Voltage | $V_{DS}$ | 30 | |
| Gate-Source Voltage | $V_{GS}$ | ±12 | |
| Drain Current-Continuous | $I_D$ | 6.5 | |
| Drain Current-Continuous($T_C$=100℃) | $_D$(100℃) | 4. | A |
| Pulsed Drain Current | $I_{DM}$ | 26 | |
| Maximum Power Dissipation | $P_D$ | 2 | |
| Operating Junction and Storage Temperature Range | $T_J$,$T_{STG}$ | -55 To 150 | ℃ |

## Thermal Characteristic

| Parameter | ymbol | Typ | Max | Unit |
|---|---|---|---|---|
| Thermal Resistance,Junction-to-Ambient (Note 2) | $R_{\theta JA}$ | 62.5 | 85 | ℃/W |

## Electrical Characteristics ($T_A$=25℃unless otherwise noted)

| Parameter | Symbol | Condition | Min | Typ | Max | Unit |
|---|---|---|---|---|---|---|
| **Off Characteristics** | | | | | | |
| Drain-Source Breakdown Voltage | $BV_{DSS}$ | $V_{GS}$=0V $I_D$=250μA | 30 | - | - | V |
| Zero Gate Voltage Drain Current | $I_{DSS}$ | $V_{DS}$=30V,$V_{GS}$=0V | - | - | 1 | μA |
| Gate-Body Leakage Current | $I_{GSS}$ | $V_{GS}$=±12V,$V_{DS}$=0V | - | - | ±100 | nA |
| **On Characteristics** (Note 3) | | | | | | |
| Gate Threshold Voltage | $V_{GS(th)}$ | $V_{DS}$=$V_{GS}$,$I_D$=250μA | 0.5 | | 2.0 | V |
| Drain-Source On-State Resistance | $R_{DS(ON)}$ | $V_{GS}$=10V, $I_D$=5A | - | | 25 | mΩ |
| | | $V_{GS}$=4.5V, $I_D$=5A | - | | 27 | |
| | | $V_{GS}$=2.5V, $I_D$=5A | - | | 33 | |
| Forward Transconductance | $g_{FS}$ | $V_{DS}$=5V,$I_D$=5A | - | 10 | - | S |
| **Dynamic Characteristics** (Note4) | | | | | | |
| Input Capacitance | $C_{lss}$ | $V_{DS}$=15V,$V_{GS}$=0V, F=1.0MHz | - | 595 | - | PF |
| Output Capacitance | $C_{oss}$ | | - | 39 | - | PF |
| Reverse Transfer Capacitance | $C_{rss}$ | | - | 36 | - | PF |
| **Switching Characteristics** (Note 4) | | | | | | |
| Turn-on Delay Time | $t_{d(on)}$ | $V_{DD}$=15V, $R_L$=3Ω $V_{GS}$=10V,$R_G$=3Ω | - | 3.0 | - | nS |
| Turn-on Rise Time | $t_r$ | | - | 4.5 | - | nS |
| Turn-Off Delay Time | $t_{d(off)}$ | | - | 25 | - | nS |
| Turn-Off Fall Time | $t_f$ | | - | 3.8 | - | nS |
| Total Gate Charge | $Q_g$ | $V_{DS}$=15V,$I_D$=5A, $V_{GS}$=4.5V | - | 9.3 | - | nC |
| Gate-Source Charge | $Q_{gs}$ | | - | 1.6 | - | nC |
| Gate-Drain Charge | $Q_{gd}$ | | - | 2.1 | - | nC |
| **Drain-Source Diode Characteristics** | | | | | | |
| Diode Forward Voltage (Note 3) | $V_{SD}$ | $V_{GS}$=0V,$I_S$=5A | - | - | 1.2 | V |
| Diode Forward Current (Note 2) | $I_S$ | | - | - | 6.5 | A |

## Notes:

**1.** Repetitive Rating: Pulse width limited by maximum junction temperature.

**2.** The value of $R_{\theta JA}$ is measured with the device mounted on 1in$^2$ FR-4 board with 2oz. Copper, in a still air environment with $T_A$=25°C. The value in any given application depends on the user's specific board design.Surface Mounted on FR4 Board, t ≤ 10 sec. The current rating is based on the t ≤ 10s thermal resistance rating.

**3.** Pulse Test: Pulse Width ≤ 300μs, Duty Cycle ≤ 2%.

**4.** Guaranteed by design, not subject to production.

## Test Circuit

### 1) $E_{AS}$ Test Circuits

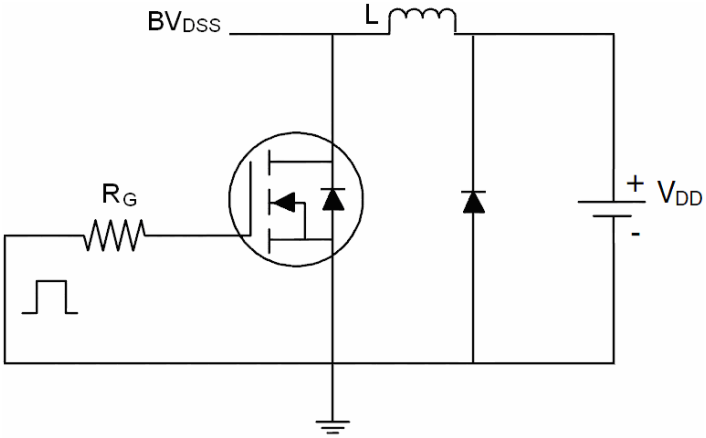


### 2) Gate Charge Test Circuit:

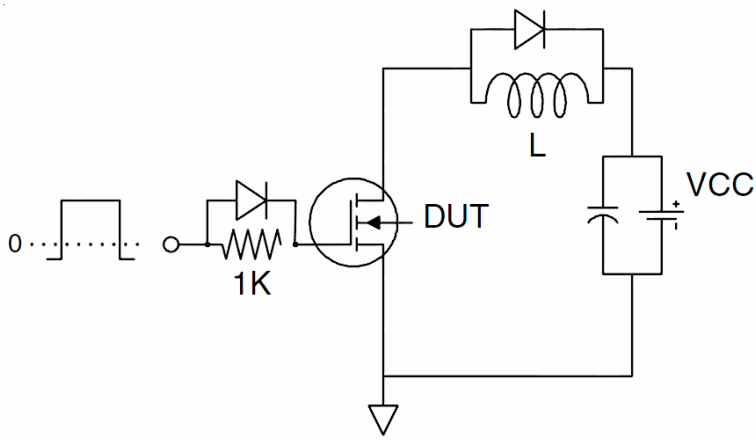


### 3) Switch Time Test Circuit:

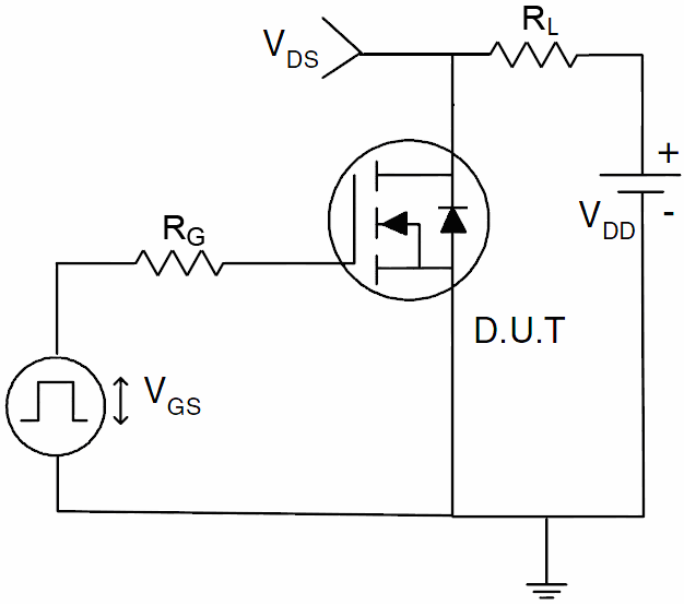

## Typical Electrical and Thermal Characteristics (Curves)

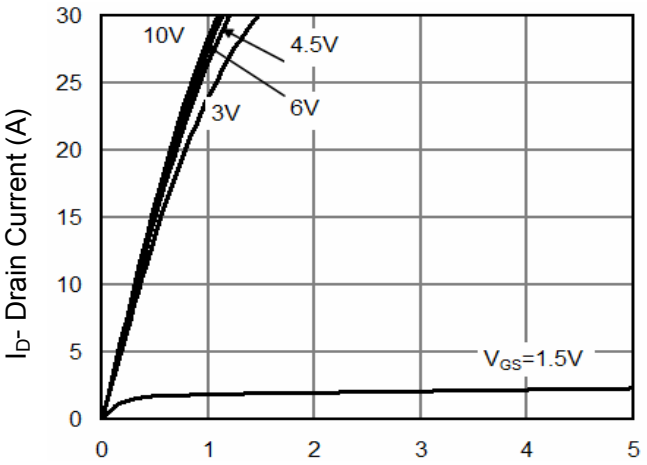


**Figure 1 Output Characteristics**

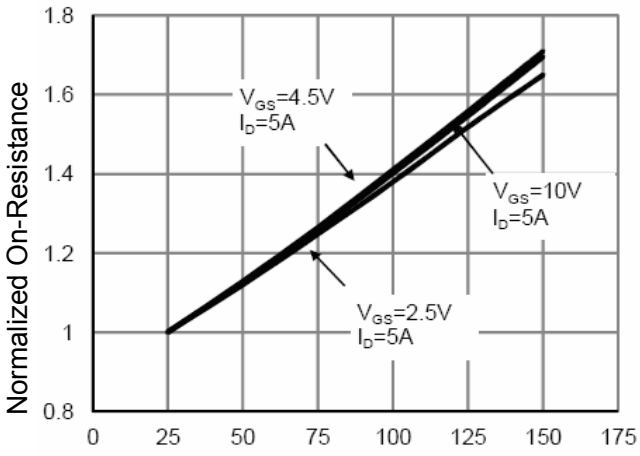


**Figure 4 Rdson-JunctionTemperature**

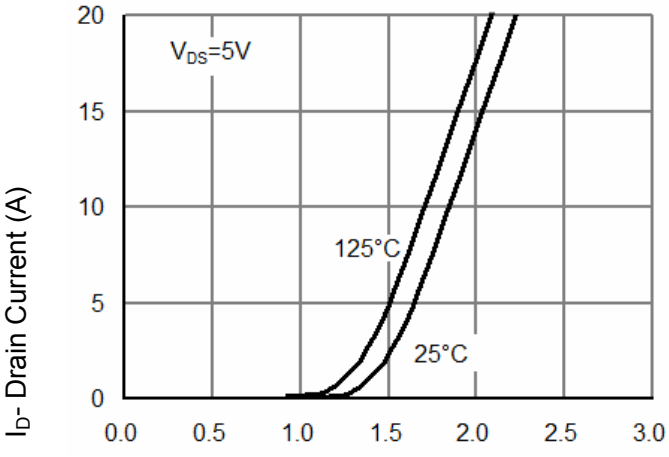


**Figure 2 Transfer Characteristics**

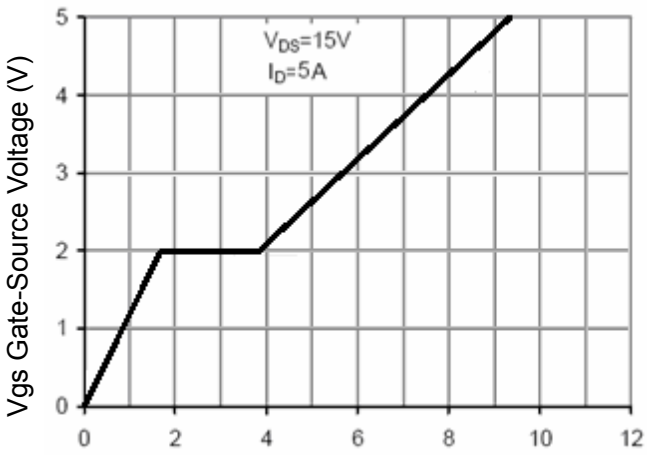


**Figure 5 Gate Charge**

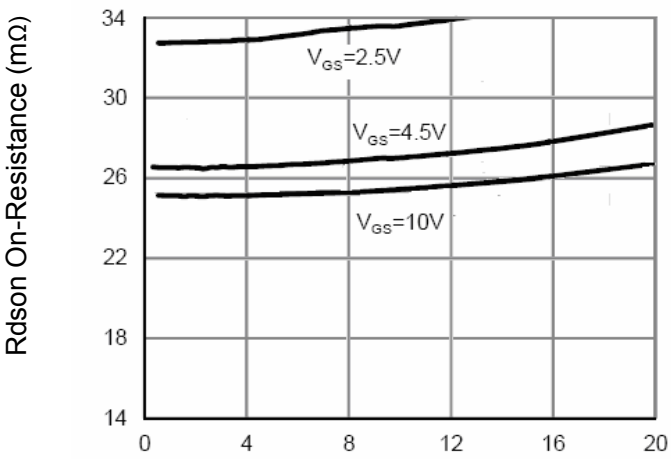


**Figure 3 Rdson- Drain Current**

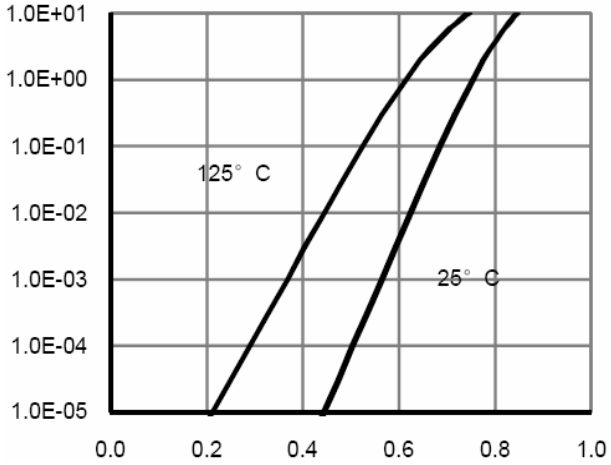


**Figure 6 Source- Drain Diode Forward**

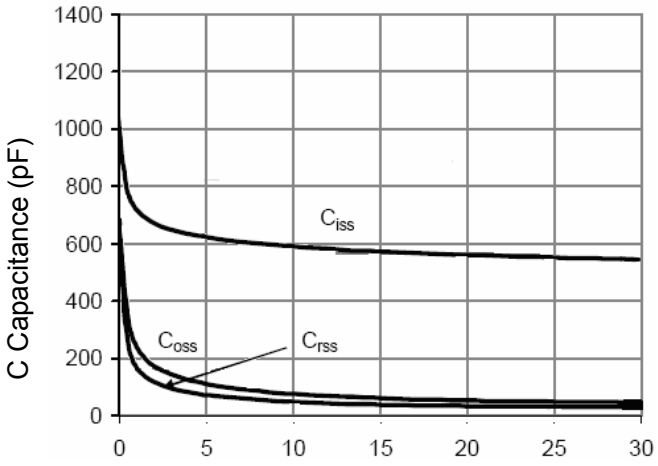


**Figure 7 Capacitance vs Vds**

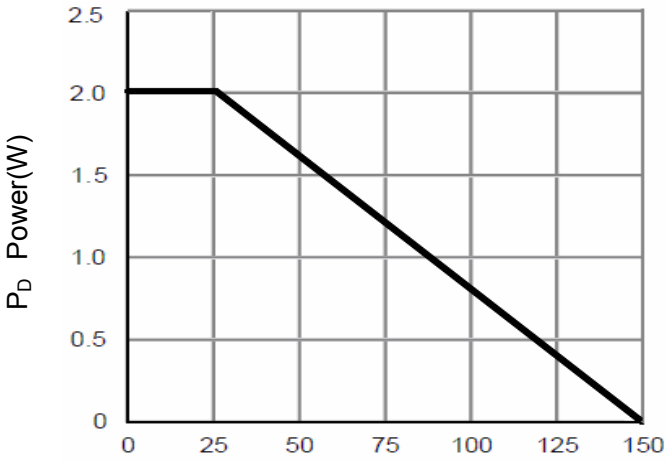


**Figure 9 Power Dissipation**

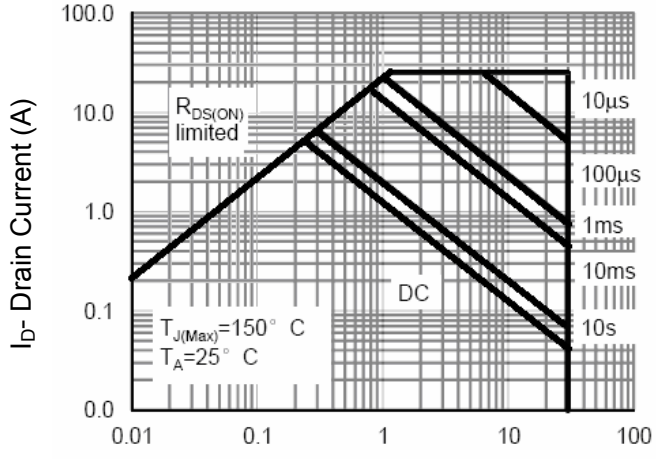


**Figure 8 Safe Operation Area**

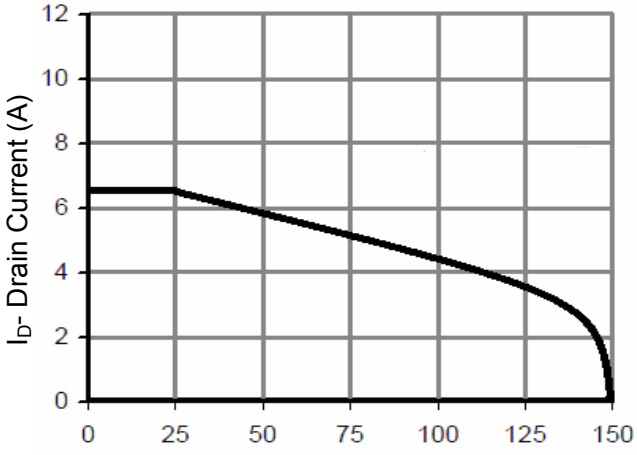


**Figure 10 Current De-rating**

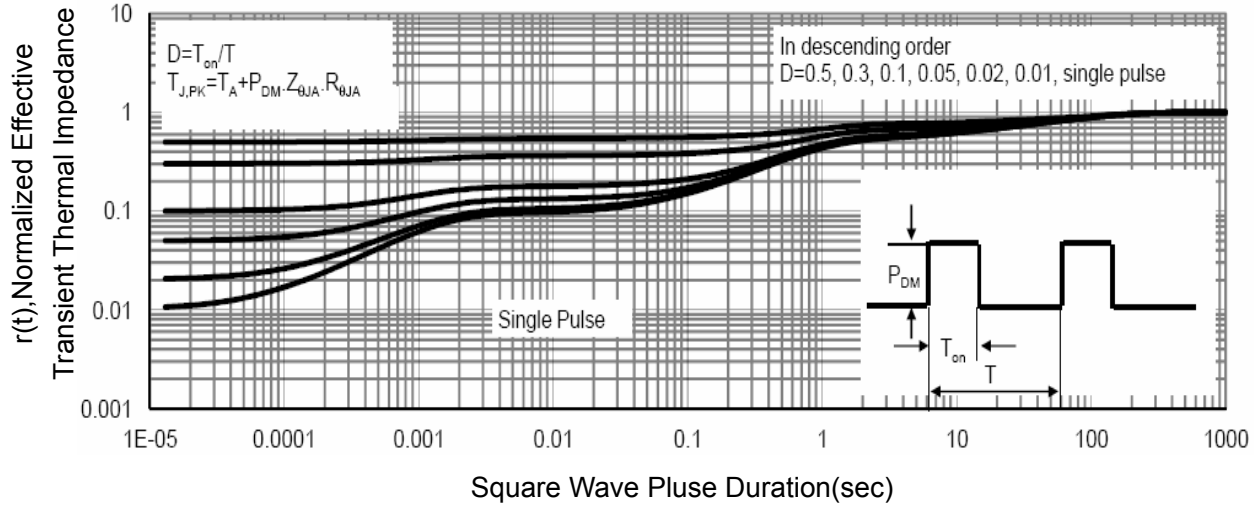


**Figure 11 Normalized Maximum Transient Thermal Impedance**