REV.	ECN NO.	DATE	SIGN	DESCRIPTION
E	C210309	2021/02/24	Ruru	△E X2
F	C221973	2022/12/21	Ruru	△F X1
G	C231034	2023/08/08	Ruru	△G X1

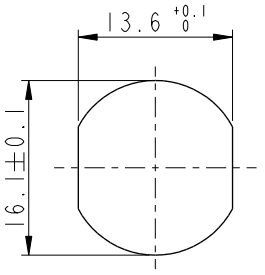

Recommended Panel Cut-Out

△B △D

△C △D

MI2A-XXPFFS-SF8002

XX: No. Of Pin

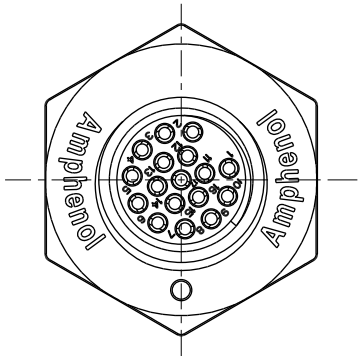

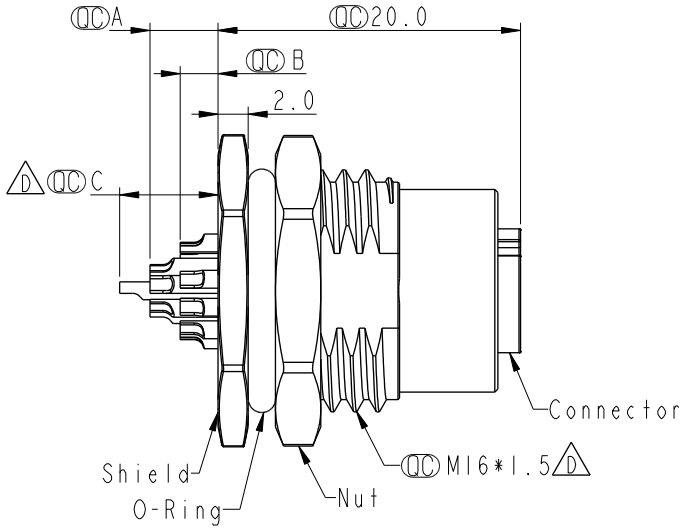

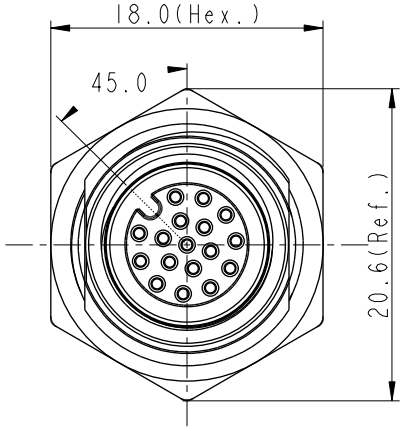

△C △D

Item No.	A	B	C
	Pin伸出長度		
MI2A-03PFFS-SF8002		2.5	
MI2A-04PFFS-SF8002		2.5	
MI2A-05PFFS-SF8002		2.5	
MI2A-06PFFS-SF8002		2.5	
MI2A-08PFFS-SF8002		2.5	
MI2A-10PFFS-SF8002	4.5	2.5	
MI2A-12PFFS-SF8002	4.5	2.5	
MI2A-17PFFS-SF8002	4.5	2.5	6.5

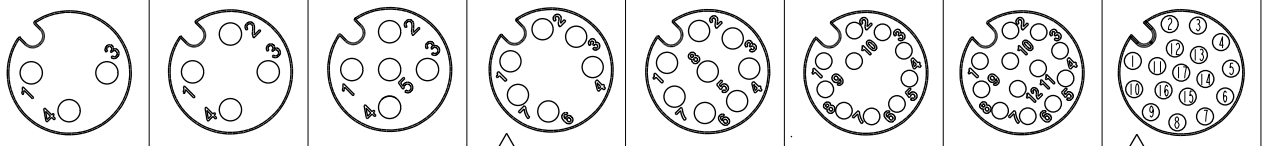

Pin Assignment Front View

△D △E Note:
* RoHS Compliant
* QC Important dimension
△F △C * Waterproof rate: IP68, unmated 1m/24h
△G IP69K, mated
* Connector
  Housing: Thermoplastic, Black
  Pin: Copper alloy, Gold plated
  O-Ring: Rubber, Green
* Shield: Metal
* Nut: Metal
* O-Ring: Rubber, Black
* For panel thickness max: 4.5mm
* Nut is packed separately in pe bag

UNIT: mm

TOLERANCE
.X ±0.25
.XX ±0.1
.XXX ±0.05
ANGLES ±1°

TITLE: N SEN, MI2 A, SCREW RECEPTACLE, F, F, SOLDER △E

SCALE 3:2 | SIZE A4 | SHEET 1 OF 1

REV. G | WC-REV. A.5 | QC: Inspection item

Amphenol LTW

安費諾亮泰企業股份有限公司

ITEM NO	DRAWN BY	DATE
	Yulong_wang	2016-08-06
DWG NO △D MI2A-XXPFFS-SF8002	CHECKED BY Jinhai	DATE 2016-08-06
CUSTOMER ALTW	APPROVED BY Jerry	DATE 2016-08-06

THIS DOCUMENT IS SUBJECT TO CHANGE WITHOUT NOTICE. IT IS CONFIDENTIAL AND A PROPERTY OF Amphenol LTW. DISCLOSURE TO THIRD PARTY HAS TO BE AUTHORIZED BY Amphenol LTW.

Unikeyic Electronics

Global Electronic Components Distributor

Click to view pricing, inventory, delivery, and lifecycle information:

AMPHENOL LTW:

FLBB-04FGMS-GCP-207 ACC-03AFFM-LL7A01 AD-03BMMA-LL7001 BSU-10PMMS-SC7001
DC-05BMFB-QL8APP LAD-05BFFM-QR8D01 M12A-17BMMM-PL8D04 M12A04FR-12AFR-SD001
MSBP05MR-SBPMR-SB001 MSBS-05PFFR-SF7003 PWC-03BFFA-LL7002 RCP5UM-UPG06M-TL7A01
M12A04FL-12AFR-SDA05 8-04PMMS-SH7002 FLKD-07EGFS-GCP-001 M12A-03PMMS-SF8001
M12A-04PFFS-SF8002 CC-03BFMB-QL8APP ASU-08PMMS-QC8A15 PWCU-04RMFS-LC7002
RCP5SM-SPG06M-TL7B01 DC-05BMMA-QL8MPP MSAP-12BMMA-SL7001 DD-18BMFA-LL7001
DT-HCM-G3BMM-RLA60 8-03PMMS-SH7002 BD-03BFFA-QL8MP0 Q8DU-05PMMS-QF8001
PWM-02BFMB-TL7001 DT-HCM-G3BFF-RLA60