PCB terminal block; Push-button; 2.5 mm²; Pin spacing 7.5/7.62 mm; 3-pole; suitable for Ex-e applications; CAGE CLAMP®; commoning option

www.wago.com/256-503/000-009/999-950

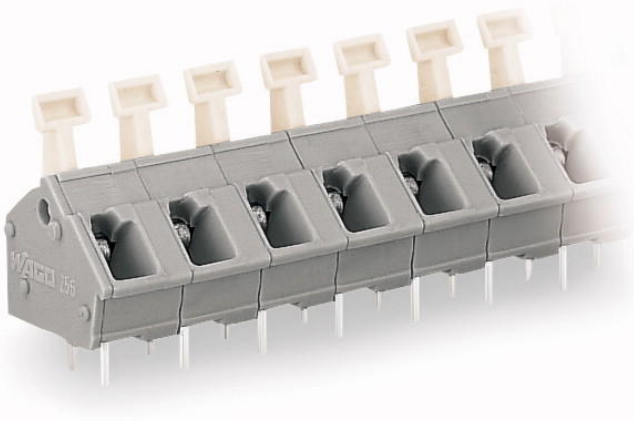

RoHS ✓ Compliant

BOMcheck.net

Color:

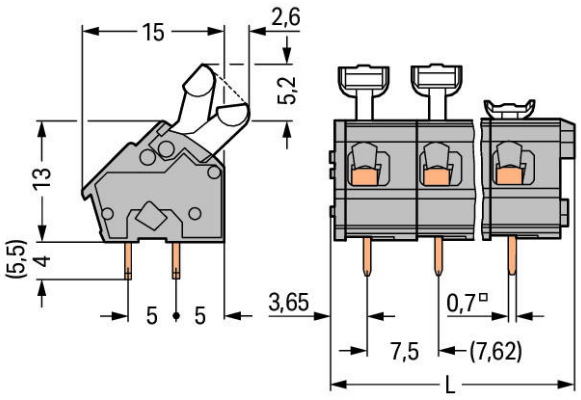

L = (pole no. x pin spacing) + 2.9 mm

Item description

- Terminal strips with push-button actuated CAGE CLAMP®
- Set to metric or inch pin spacing by compressing terminal strips together or pulling them apart
- Ideal for in-the-field wiring thanks to simplified push-button actuation
- Convenient, tool-free operation

Data

Electrical data

Rated voltage EN (Ex e II)	275 V
Rated current (Ex e II)	16 A

Connection data

Connection technology	CAGE CLAMP®
Actuation type	Push-button
Solid conductor	0.08 … 2.5 mm² / 28 … 12 AWG
Fine-stranded conductor	0.08 … 2.5 mm² / 28 … 12 AWG
Fine-stranded conductor with ferrule with plastic collar	0.25 … 1.5 mm²
Fine-stranded conductor with ferrule without plastic collar	0.25 … 1.5 mm²

Downloaded from Arrow.com.

Strip length	5 … 6 mm / 0.2 … 0.24 Inch
Conductor entry angle to the PCB	45 °
No. of poles	3
Number of levels	1
Total number of connection points	3
Total number of potentials	3
Number of connection types	1

Geometrical Data

Pin spacing	7.5/7.62 mm / 0.295/0.3 inch
Width	25.4 mm / 1 inch
Height	22.2 mm / 0.874 inch
Height from the surface	18.2 mm / 0.717 inch
Depth	17.6 mm / 0.693 inch
Solder pin length	4 mm
Solder pin dimensions	0.7 x 0.7 mm
Drilled hole diameter (tolerance)	$1.1^{(+\,0.1)}$ mm

PCB contact

PCB contact	THT
Solder pin arrangement	over the entire terminal strip, in line
Number of solder pins per potential	2

Material Data

Color	light gray
Material group	I
Insulating material	Polyamide 66 (PA 66)
Flammability class per UL94	V0
Clamping spring material	Chrome nickel spring steel (CrNi)
Contact material	Electrolytic copper (Ecu)
Contact plating	tin-plated
Fire load	0.065 MJ
Weight	3.635 g

Environmental Requirements

Limit temperature range	-60 … +105 °C

Commercial data

Country of origin	CH

Downloaded from Arrow.com.

GTIN	4044918764506
Product Group	4 (Printed Circuit)

Approvals / Certificates

Ex-Approvals

Logo	Approval	Certificate name
	AEx UL International Germany GmbH c/o Physikalisch Technische Bundesanstalt	E185892 sec.3
	ATEx Physikalisch Technische Bundesanstalt (PTB)	PTB 06 Atex 1061 U (II 2 G Ex ell bzw. I M2 Ex el)

Compatible products

Marking accessories

	Item no.: 210-332/750-020 Marking strips; as a DIN A4 sheet; MARKED; 1-20 (80x); Height of marker strip: 3 mm; Strip length 182 mm; Horizontal marking; Self-adhesive	www.wago.com/210-332/750-020
	Item no.: 210-332/762-020 Marking strips; as a DIN A4 sheet; MARKED; 1-20 (80x); Height of marker strip: 3 mm; Strip length 182 mm; Horizontal marking; Self-adhesive	www.wago.com/210-332/762-020

check

	Item no.: 249-112 Test plug adapter; suitable for 255, 256, 257 Series PCB terminal blocks; 1-pole; Pin spacing 7.5 mm / 0.295 in	www.wago.com/249-112
	Item no.: 249-113 Test plug adapter; suitable for 255, 256, 257 Series PCB terminal blocks; 1-pole; Pin spacing 7.62 mm / 0.3 in	www.wago.com/249-113

tools

	Item no.: 210-658 Operating tool with partially insulated shaft; Blade (3.5 x 0.5) mm; short; angled	www.wago.com/210-658
	Item no.: 210-720 Operating tool with partially insulated shaft; Type 2, blade (3.5 x 0.5) mm	www.wago.com/210-720

ferrule

	Item no.: 216-101 Ferrule; Sleeve for 0.5 mm² / AWG 22; uninsulated; electro-tin plated	www.wago.com/216-101
	Item no.: 216-102 Ferrule; Sleeve for 0.75 mm² / AWG 20; uninsulated; electro-tin plated	www.wago.com/216-102
	Item no.: 216-103	

Downloaded from Arrow.com.

	Ferrule; Sleeve for 1 mm² / AWG 18; uninsulated; electro-tin plated	www.wago.com/216-103
	**Item no.: 216-104** Ferrule; Sleeve for 1.5 mm² / AWG 16; uninsulated; electro-tin plated	www.wago.com/216-104
	**Item no.: 216-121** Ferrule; Sleeve for 0.5 mm² / AWG 22; uninsulated; electro-tin plated	www.wago.com/216-121
	**Item no.: 216-122** Ferrule; Sleeve for 0.75 mm² / AWG 20; uninsulated; electro-tin plated	www.wago.com/216-122
	**Item no.: 216-123** Ferrule; Sleeve for 1 mm² / AWG 18; uninsulated; electro-tin plated	www.wago.com/216-123
	**Item no.: 216-124** Ferrule; Sleeve for 1.5 mm² / AWG 16; uninsulated; electro-tin plated	www.wago.com/216-124
	**Item no.: 216-131** Ferrule; Sleeve for 0.25 mm² / AWG 24; uninsulated; electro-tin plated	www.wago.com/216-131
	**Item no.: 216-132** Ferrule; Sleeve for 0.34 mm² / AWG 24; uninsulated; electro-tin plated	www.wago.com/216-132
	**Item no.: 216-141** Ferrule; Sleeve for 0.5 mm² / AWG 22; uninsulated; electro-tin plated; electrolytic copper; gastight crimped; acc. to DIN 46228, Part 1/08.92	www.wago.com/216-141
	**Item no.: 216-142** Ferrule; Sleeve for 0.75 mm² / AWG 20; uninsulated; electro-tin plated; electrolytic copper; gastight crimped; acc. to DIN 46228, Part 1/08.92	www.wago.com/216-142
	**Item no.: 216-143** Ferrule; Sleeve for 1 mm² / AWG 18; uninsulated; electro-tin plated; electrolytic copper; gastight crimped; acc. to DIN 46228, Part 1/08.92	www.wago.com/216-143
	**Item no.: 216-144** Ferrule; Sleeve for 1.5 mm² / AWG 16; uninsulated; electro-tin plated; electrolytic copper; gastight crimped; acc. to DIN 46228, Part 1/08.92	www.wago.com/216-144
	**Item no.: 216-151** Ferrule; Sleeve for 0.25 mm² / AWG 24; uninsulated; electro-tin plated	www.wago.com/216-151
	**Item no.: 216-152** Ferrule; Sleeve for 0.34 mm² / AWG 24; uninsulated; electro-tin plated	www.wago.com/216-152
	**Item no.: 216-201** Ferrule; Sleeve for 0.5 mm² / AWG 22; insulated; electro-tin plated	www.wago.com/216-201
	**Item no.: 216-202** Ferrule; Sleeve for 0.75 mm² / AWG 20; insulated; electro-tin plated	www.wago.com/216-202
	**Item no.: 216-203** Ferrule; Sleeve for 1 mm² / AWG 18; insulated; electro-tin plated	www.wago.com/216-203
	**Item no.: 216-204** Ferrule; Sleeve for 1.5 mm² / AWG 16; insulated; electro-tin plated	www.wago.com/216-204
	**Item no.: 216-221** Ferrule; Sleeve for 0.5 mm² / AWG 22; insulated; electro-tin plated	www.wago.com/216-221
	Item no.: 216-222	

Downloaded from Arrow.com.

	Ferrule; Sleeve for 0.75 mm² / AWG 20; insulated; electro-tin plated	www.wago.com/216-222
	**Item no.: 216-223** Ferrule; Sleeve for 1 mm² / AWG 18; insulated; electro-tin plated	www.wago.com/216-223
	**Item no.: 216-224** Ferrule; Sleeve for 1.5 mm² / AWG 16; insulated; electro-tin plated	www.wago.com/216-224
	**Item no.: 216-241** Ferrule; Sleeve for 0.5 mm² / AWG 22; insulated; electro-tin plated; electrolytic copper; gastight crimped; acc. to DIN 46228, Part 4/09.90	www.wago.com/216-241
	**Item no.: 216-242** Ferrule; Sleeve for 0.75 mm² / AWG 20; insulated; electro-tin plated; electrolytic copper; gastight crimped; acc. to DIN 46228, Part 4/09.90	www.wago.com/216-242
	**Item no.: 216-243** Ferrule; Sleeve for 1 mm² / AWG 18; insulated; electro-tin plated; electrolytic copper; gastight crimped; acc. to DIN 46228, Part 4/09.90	www.wago.com/216-243
	**Item no.: 216-244** Ferrule; Sleeve for 1.5 mm² / AWG 16; insulated; electro-tin plated; electrolytic copper; gastight crimped; acc. to DIN 46228, Part 4/09.90	www.wago.com/216-244
	**Item no.: 216-262** Ferrule; Sleeve for 0.75 mm² / AWG 20; insulated; electro-tin plated; electrolytic copper; gastight crimped; acc. to DIN 46228, Part 4/09.90	www.wago.com/216-262
	**Item no.: 216-263** Ferrule; Sleeve for 1 mm² / AWG 18; insulated; electro-tin plated; electrolytic copper; gastight crimped; acc. to DIN 46228, Part 4/09.90	www.wago.com/216-263
	**Item no.: 216-264** Ferrule; Sleeve for 1.5 mm² / AWG 16; insulated; electro-tin plated; electrolytic copper; gastight crimped; acc. to DIN 46228, Part 4/09.90	www.wago.com/216-264
	**Item no.: 216-284** Ferrule; Sleeve for 1.5 mm² / AWG 16; insulated; electro-tin plated; electrolytic copper; gastight crimped; acc. to DIN 46228, Part 4/09.90	www.wago.com/216-284
	**Item no.: 216-301** Ferrule; Sleeve for 0.25 mm² / AWG 24; insulated; electro-tin plated	www.wago.com/216-301
	**Item no.: 216-302** Ferrule; Sleeve for 0.34 mm² / AWG 24; insulated; electro-tin plated	www.wago.com/216-302
	**Item no.: 216-321** Ferrule; Sleeve for 0.25 mm² / AWG 24; insulated; electro-tin plated	www.wago.com/216-321
	**Item no.: 216-322** Ferrule; Sleeve for 0.34 mm² / AWG 24; insulated; electro-tin plated	www.wago.com/216-322

Downloads

CAD files

PCB libraries

EAGLE Library for WAGO PCB Terminal Blocks Compatible with EAGLE PCB Design Software Version 6.x or higher	2.1 Nov 17, 2017	ZIP 23.9 MB	Download

Downloaded from Arrow.com.

TARGET Library for WAGO PCB Terminal Blocks Compatible with TARGET PCB Design Software Version 17.x	1.1.0 Oct 6, 2014	ZIP 27.1 MB	Download
DesignSpark Library for WAGO PCB Terminal Blocks Compatible with DesignSpark PCB Version 4.x or higher	2.1 Oct 6, 2014	ZIP 22.5 MB	Download

CAD data

3D Download 256-503/000-009/999-950		URL	Download

Downloaded from Arrow.com.

Unikeyic Electronics

Global Electronic Components Distributor

Click to view pricing, inventory, delivery, and lifecycle information:

WAGO:

2086-1107 2606-3353 759-302 859-798 261-402 769-131 769-428 890-503 2010-1205 207-4301
2102-1204 2787-2144 233-508 236-424 2636-3108/020-000 859-354 885-566 260-105 751-9301 769-413
852-1322 855-3001/250-001 2002-1207 235-502 2624-1312 2636-1355 236-506 2624-3502
750-1405/040-000 750-638/025-000