# AiP74LVC138
# 3-to-8 Line Decoder/Demultiplexer; Inverting

# Product Specification

**Specification Revision History：**

| Version | Date | Description |
|---|---|---|
| 2017-05-A1 | 2017-05 | New |
| 2023-04-B1 | 2023-04 | Update the template |
| | | |
| | | |

# Contents

**1、General Description ..... 3**

**2、Block Diagram And Pin Description ..... 5**

2.1、Block Diagram ..... 5

2.2、Pin Configurations ..... 6

2.3、Pin Description ..... 6

2.4、Function Table ..... 7

**3、Electrical Parameter ..... 7**

3.1、Absolute Maximum Ratings ..... 7

3.2、Recommended Operating Conditions ..... 8

3.3、Electrical Characteristics ..... 8

3.3.1、DC Characteristics 1 ..... 8

3.3.2、DC Characteristics 2 ..... 9

3.3.3、AC Characteristics 1 ..... 10

3.3.4、AC Characteristics 2 ..... 11

**4、Testing Circuit ..... 11**

4.1、AC Testing Circuit ..... 11

4.2、AC Testing Waveforms ..... 12

4.3、Measurement Points ..... 12

4.4、Test Data ..... 12

**5、Package Information ..... 13**

5.1、DIP16 ..... 13

5.2、SOP16 ..... 14

5.3、TSSOP16 ..... 15

5.4、DHVQFN16 ..... 16

**6、Statements And Notes ..... 17**

6.1、The name and content of Hazardous substances or Elements in the product ..... 17

6.2、Notes ..... 17

i-core

## 1、General Description

The AiP74LVC138 is a 3-to-8 line decoder/demultiplexer. It accepts three binary weighted address inputs (A0, A1 and A2) and, when enabled, provides eight mutually exclusive outputs ($\overline{Y}0$ to $\overline{Y}7$) that are LOW when selected.

There are three enable inputs: two active LOW ($\overline{E}1$ and $\overline{E}2$) and one active HIGH (E3). Every output will be HIGH unless $\overline{E}1$ and $\overline{E}2$ are LOW and E3 is HIGH.

This multiple enable function allows easy parallel expansion of the device to a 1-of-32 (5 lines to 32 lines) decoder with just four AiP74LVC138 devices and one inverter. The AiP74LVC138 can be used as an eight output demultiplexer by using one of the active LOW enable inputs as the data input and the remaining enable inputs as strobes. Unused enable inputs must be permanently tied to their appropriate active HIGH or LOW state.

**Features:**

- 5V tolerant inputs/outputs for interfacing with 5V logic
- Wide supply voltage range from 1.2V to 3.6V
- CMOS low power consumption
- Direct interface with TTL levels
- Demultiplexing capability
- Multiple input enable for easy expansion
- Ideal for memory chip select decoding
- Mutually exclusive outputs
- Specified from -40℃ to +125℃
- Packaging information: DIP16/SOP16/TSSOP16/DHVQFN16

i-core

**Ordering Information:**

**Tube packing specifications:**

| Part number | Packaging form | Marking code | Tube quantity | Boxed tube quantity | Boxed quantity | Notes |
|---|---|---|---|---|---|---|
| AiP74LVC138DA16.TB | DIP16 | 74LVC138 | 25 PCS/tube | 40 tube/box | 1000 PCS/box | Dimensions of plastic enclosure: 19.0mm×6.4mm Pin spacing: 2.54mm |
| AiP74LVC138SA16.TB | SOP16 | 74LVC138 | 50 PCS/tube | 200 tube/box | 10000 PCS/box | Dimensions of plastic enclosure: 10.0mm×3.9mm Pin spacing: 1.27mm |
| AiP74LVC138TA16.TB | TSSOP16 | 74LVC138 | 96 PCS/tube | 200 tube/box | 19200 PCS/box | Dimensions of plastic enclosure: 5.0mm×4.4mm Pin spacing: 0.65mm |

**Reel packing specifications:**

| Part number | Packaging form | Marking code | Reel quantity | Boxed reel quantity | Notes |
|---|---|---|---|---|---|
| AiP74LVC138SA16.TR | SOP16 | 74LVC138 | 4000 PCS/reel | 8000 PCS/box | Dimensions of plastic enclosure: 10.0mm×3.9mm Pin spacing:1.27mm |
| AiP74LVC138TA16.TR | TSSOP16 | 74LVC138 | 5000 PCS/reel | 10000 PCS/box | Dimensions of plastic enclosure: 5.0mm×4.4mm Pin spacing:0.65mm |
| AiP74LVC138QE16.TR | DHVQFN16 | 74LVC138 | 3000 PCS/reel | 3000 PCS/box | Dimensions of plastic enclosure: 3.5mm×2.5mm Pin spacing: 0.5mm |

Note: If the physical information is inconsistent with the ordering information, please refer to the actual product.

## 2、Block Diagram And Pin Description

### 2.1、Block Diagram

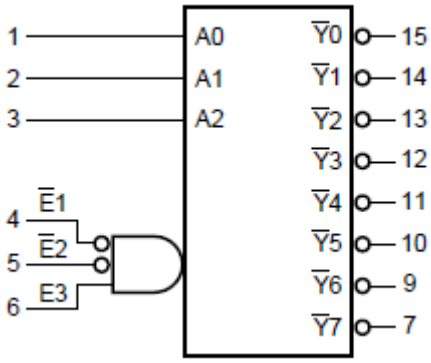


Figure 1. Logic symbol

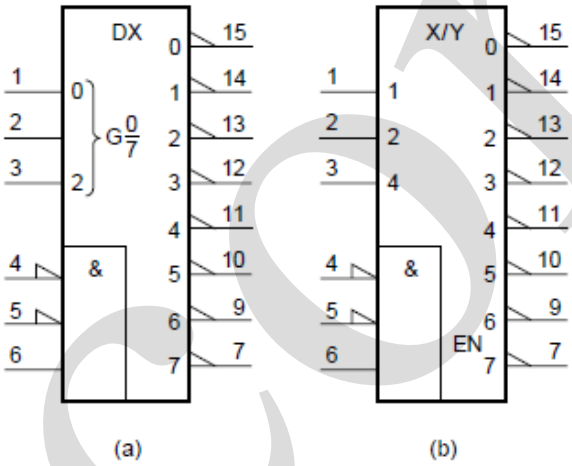


Figure 2. IEC logic symbol

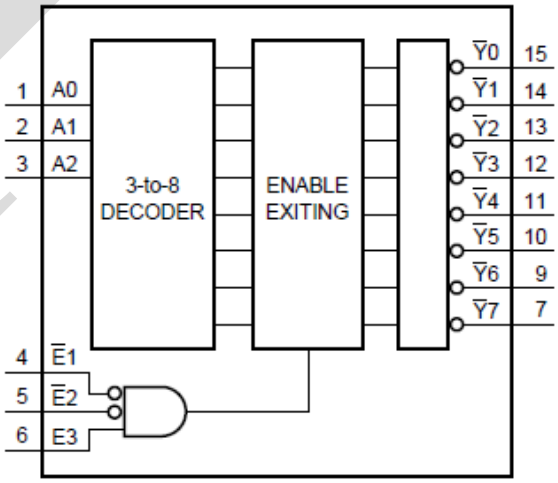


Figure 3. Functional diagram

## 2.2、Pin Configurations

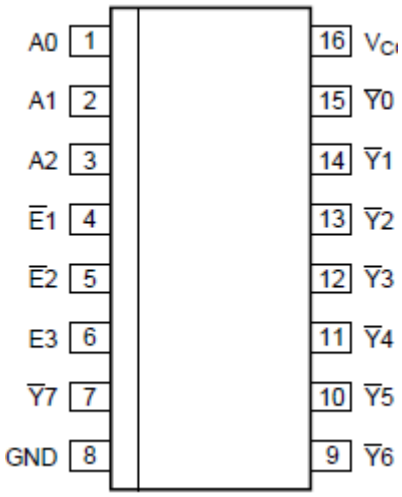


DIP16/SOP16/TSSOP16

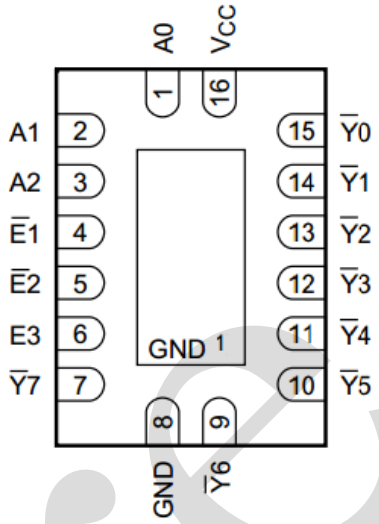


DHVQFN16

Note：

1. This is not a supply pin. The substrate is attached to this pad using conductive die attach material. There is no electrical or mechanical requirement to solder this pad. However, if it is soldered, the solder land should remain floating or be connected to GND.

## 2.3、Pin Description

| Pin No. | Pin Name | Description |
|---|---|---|
| 1 | A0 | address input |
| 2 | A1 | address input |
| 3 | A2 | address input |
| 4 | $\overline{E}1$ | enable input (active LOW) |
| 5 | $\overline{E}2$ | enable input (active LOW) |
| 6 | E3 | enable input (active HIGH) |
| 7 | $\overline{Y}7$ | output |
| 8 | GND | ground (0V) |
| 9 | $\overline{Y}6$ | output |
| 10 | $\overline{Y}5$ | output |
| 11 | $\overline{Y}4$ | output |
| 12 | $\overline{Y}3$ | output |
| 13 | $\overline{Y}2$ | output |
| 14 | $\overline{Y}1$ | output |
| 15 | $\overline{Y}0$ | output |
| 16 | $V_{CC}$ | supply voltage |

### 2.4、Function Table

| Input | | | | | | Output | | | | | | | |
|---|---|---|---|---|---|---|---|---|---|---|---|---|---|
| $\overline{E1}$ | $\overline{E2}$ | E3 | A0 | A1 | A2 | $\overline{Y0}$ | $\overline{Y1}$ | $\overline{Y2}$ | $\overline{Y3}$ | $\overline{Y4}$ | $\overline{Y5}$ | $\overline{Y6}$ | $\overline{Y7}$ |
| H | X | X | X | X | X | H | H | H | H | H | H | H | H |
| X | H | X | X | X | X | H | H | H | H | H | H | H | H |
| X | X | L | X | X | X | H | H | H | H | H | H | H | H |
| L | L | H | L | L | L | L | H | H | H | H | H | H | H |
| L | L | H | H | L | L | H | L | H | H | H | H | H | H |
| L | L | H | L | H | L | H | H | L | H | H | H | H | H |
| L | L | H | H | H | L | H | H | H | L | H | H | H | H |
| L | L | H | L | L | H | H | H | H | H | L | H | H | H |
| L | L | H | H | L | H | H | H | H | H | H | L | H | H |
| L | L | H | L | H | H | H | H | H | H | H | H | L | H |
| L | L | H | H | H | H | H | H | H | H | H | H | H | L |

Note: H=HIGH voltage level; L=LOW voltage level; X=don't care.

## 3、**Electrical** Parameter

### 3.1、Absolute Maximum Ratings

(Voltages are referenced to GND(ground=0V), unless otherwise specified.)

| Parameter | Symbol | Conditions | | Min. | Max. | Unit |
|---|---|---|---|---|---|---|
| supply voltage | $V_{CC}$ | - | | -0.5 | +6.5 | V |
| input clamping current | $I_{IK}$ | $V_I < 0V$ | | -50 | - | mA |
| input voltage | $V_I$ | - | | -0.5 | +6.5 | V |
| output clamping current | $I_{OK}$ | $V_O > V_{CC}$ or $V_O < 0V$ | | - | ±50 | mA |
| output voltage | $V_O$ | output HIGH or LOW state | | -0.5 | $V_{CC}$+0.5 | V |
| output current | $I_O$ | $V_O$=0V to $V_{CC}$ | | - | ±50 | mA |
| supply current | $I_{CC}$ | - | | - | 100 | mA |
| ground current | $I_{GND}$ | - | | -100 | - | mA |
| total power dissipation | $P_{tot}$ | - | | - | 500 | mW |
| storage temperature | $T_{stg}$ | - | | -65 | +150 | ℃ |
| Soldering Temperature | $T_L$ | 10s | DIP | 245 | | ℃ |
| | | | SOP/TSSOP/DHVQFN | 260 | | ℃ |

### 3.2、Recommended Operating Conditions

| Parameter | Symbol | Conditions | Min. | Typ. | Max. | Unit |
|---|---|---|---|---|---|---|
| supply voltage | $V_{CC}$ | - | 1.65 | - | 3.6 | V |
| | | functional | 1.2 | - | - | V |
| input voltage | $V_I$ | - | 0 | - | 5.5 | V |
| output voltage | $V_O$ | output HIGH or LOW-state | 0 | - | $V_{CC}$ | V |
| ambient temperature | $T_{amb}$ | - | -40 | - | +125 | ℃ |
| input transition rise and fall rate | $\Delta t/\Delta V$ | $V_{CC}$=1.65V to 2.7V | 0 | - | 20 | ns/V |
| | | $V_{CC}$=2.7V to 3.6V | 0 | - | 10 | ns/V |

### 3.3、Electrical Characteristics

#### 3.3.1、DC Characteristics 1

($T_{amb}$=-40℃ to +85℃, voltages are referenced to GND (ground=0V), unless otherwise specified.)

| Parameter | Symbol | Conditions | | Min. | Typ. | Max. | Unit |
|---|---|---|---|---|---|---|---|
| HIGH-level input voltage | $V_{IH}$ | $V_{CC}$=1.2V | | 1.08 | - | - | V |
| | | $V_{CC}$=1.65V to 1.95V | | 0.65× $V_{CC}$ | - | - | V |
| | | $V_{CC}$=2.3V to 2.7V | | 1.7 | - | - | V |
| | | $V_{CC}$=2.7V to 3.6V | | 2.0 | - | - | V |
| LOW-level input voltage | $V_{IL}$ | $V_{CC}$=1.2V | | - | - | 0.12 | V |
| | | $V_{CC}$=1.65V to 1.95V | | - | - | 0.35× $V_{CC}$ | V |
| | | $V_{CC}$=2.3V to 2.7V | | - | - | 0.7 | V |
| | | $V_{CC}$=2.7V to 3.6V | | - | - | 0.8 | V |
| HIGH-level output voltage | $V_{OH}$ | $V_I$ = $V_{IH}$ or $V_{IL}$ | $I_O$=-100uA; $V_{CC}$=1.65V to 3.6V | $V_{CC}$ - 0.2 | - | - | V |
| | | | $I_O$=-4mA; $V_{CC}$=1.65V | 1.2 | - | - | V |
| | | | $I_O$=-8mA; $V_{CC}$=2.3V | 1.8 | - | - | V |
| | | | $I_O$=-12mA; $V_{CC}$=2.7V | 2.2 | - | - | V |
| | | | $I_O$=-18mA; $V_{CC}$=3.0V | 2.4 | - | - | V |
| | | | $I_O$=-24mA; $V_{CC}$=3.0V | 2.2 | - | - | V |
| LOW-level output voltage | $V_{OL}$ | $V_I$ = $V_{IH}$ or $V_{IL}$ | $I_O$=100uA; $V_{CC}$=1.65V to 3.6V | - | - | 0.2 | V |
| | | | $I_O$=4mA; $V_{CC}$=1.65V | - | - | 0.45 | V |
| | | | $I_O$=8mA; $V_{CC}$=2.3V | - | - | 0.6 | V |
| | | | $I_O$=12mA; $V_{CC}$=2.7V | - | - | 0.4 | V |
| | | | $I_O$=24mA; $V_{CC}$=3.0V | - | - | 0.55 | V |
| input leakage current | $I_I$ | $V_I$=5.5V or GND; $V_{CC}$=3.6V | | - | - | ±5 | uA |
| supply current | $I_{CC}$ | $V_I$=$V_{CC}$ or GND; $I_O$=0A; $V_{CC}$=3.6V | | - | - | 15 | uA |
| additional supply current | $\Delta I_{CC}$ | per input pin; $V_I$=$V_{CC}$-0.6V; $I_O$=0A; $V_{CC}$=2.7V to 3.6V | | - | - | 500 | uA |
| input capacitance | $C_I$ | $V_{CC}$=0V to 3.6V; $V_I$= GND to $V_{CC}$ | | - | 4.0 | - | pF |

Note: All typical values are measured at $V_{CC}$=3.3V (unless stated otherwise) and $T_{amb}$=25℃.

### 3.3.2、DC Characteristics 2

($T_{amb}$=-40℃ to +125℃, voltages are referenced to GND (ground=0V), unless otherwise specified.)

| Parameter | Symbol | Conditions | | Min. | Typ. | Max. | Unit |
|---|---|---|---|---|---|---|---|
| HIGH-level input voltage | $V_{IH}$ | $V_{CC}$=1.2V | | 1.08 | - | - | V |
| | | $V_{CC}$=1.65V to 1.95V | | 0.65× $V_{CC}$ | - | - | V |
| | | $V_{CC}$=2.3V to 2.7V | | 1.7 | - | - | V |
| | | $V_{CC}$=2.7V to 3.6V | | 2.0 | - | - | V |
| LOW-level input voltage | $V_{IL}$ | $V_{CC}$=1.2V | | - | - | 0.12 | V |
| | | $V_{CC}$=1.65V to 1.95V | | - | - | 0.35× $V_{CC}$ | V |
| | | $V_{CC}$=2.3V to 2.7V | | - | - | 0.7 | V |
| | | $V_{CC}$=2.7V to 3.6V | | - | - | 0.8 | V |
| HIGH-level output voltage | $V_{OH}$ | $V_I$ = $V_{IH}$ or $V_{IL}$ | $I_O$=-100uA; $V_{CC}$=1.65V to 3.6V | $V_{CC}$ - 0.3 | - | - | V |
| | | | $I_O$=-4mA; $V_{CC}$=1.65V | 1.05 | - | - | V |
| | | | $I_O$=-8mA; $V_{CC}$=2.3V | 1.65 | - | - | V |
| | | | $I_O$=-12mA; $V_{CC}$=2.7V | 2.05 | - | - | V |
| | | | $I_O$=-18mA; $V_{CC}$=3.0V | 2.25 | - | - | V |
| | | | $I_O$=-24mA; $V_{CC}$=3.0V | 2.0 | - | - | V |
| LOW-level output voltage | $V_{OL}$ | $V_I$ = $V_{IH}$ or $V_{IL}$ | $I_O$=100uA; $V_{CC}$=1.65V to 3.6V | - | - | 0.3 | V |
| | | | $I_O$=4mA; $V_{CC}$=1.65V | - | - | 0.65 | V |
| | | | $I_O$=8mA; $V_{CC}$=2.3V | - | - | 0.8 | V |
| | | | $I_O$=12mA; $V_{CC}$=2.7V | - | - | 0.6 | V |
| | | | $I_O$=24mA; $V_{CC}$=3.0V | - | - | 0.8 | V |
| input leakage current | $I_I$ | $V_I$=5.5V or GND; $V_{CC}$=3.6V | | - | - | ±20 | uA |
| supply current | $I_{CC}$ | $V_I$=$V_{CC}$ or GND; $I_O$=0A; $V_{CC}$=3.6V | | - | - | 200 | uA |
| additional supply current | $\Delta I_{CC}$ | per input pin; $V_I$=$V_{CC}$-0.6V; $I_O$=0A; $V_{CC}$=2.7V to 3.6V | | - | - | 5000 | uA |

Note: All typical values are measured at $V_{CC}$=3.3V (unless stated otherwise) and $T_{amb}$=25℃.

### 3.3.3、AC Characteristics 1

($T_{amb}$=-40℃ to +85℃, voltages are referenced to GND (ground=0V), unless otherwise specified.)

| Parameter | Symbol | Conditions | | Min. | Typ. | Max. | Unit |
|---|---|---|---|---|---|---|---|
| propagation delay | $t_{pd}$ | An to $\overline{Y}$n see Figure 5 | $V_{CC}$=1.2V | - | 14 | - | ns |
| | | | $V_{CC}$=1.65V to 1.95V | 0.5 | 5.2 | 11.5 | ns |
| | | | $V_{CC}$=2.3V to 2.7V | 1.5 | 3.0 | 6.5 | ns |
| | | | $V_{CC}$=2.7V | 1.5 | 3.2 | 6.8 | ns |
| | | | $V_{CC}$=3.0V to 3.6V | 1.0 | 2.7 | 5.8 | ns |
| | | E3 to $\overline{Y}$n see Figure 5 | $V_{CC}$=1.2V | - | 14 | - | ns |
| | | | $V_{CC}$=1.65V to 1.95V | 1.0 | 5.5 | 11.4 | ns |
| | | | $V_{CC}$=2.3V to 2.7V | 1.5 | 3.2 | 6.5 | ns |
| | | | $V_{CC}$=2.7V | 1.5 | 3.3 | 6.8 | ns |
| | | | $V_{CC}$=3.0V to 3.6V | 1.0 | 2.9 | 5.8 | ns |
| | | $\overline{E}$n to $\overline{Y}$n see Figure 6 | $V_{CC}$=1.2V | - | 15 | - | ns |
| | | | $V_{CC}$=1.65V to 1.95V | 1.0 | 5.6 | 11.5 | ns |
| | | | $V_{CC}$=2.3V to 2.7V | 1.8 | 3.3 | 6.5 | ns |
| | | | $V_{CC}$=2.7V | 1.5 | 3.4 | 6.4 | ns |
| | | | $V_{CC}$=3.0V to 3.6V | 1.0 | 2.9 | 5.8 | ns |
| output skew time | $t_{sk(o)}$ | - | | - | - | 1.0 | ns |
| Power dissipation capacitance | $C_{PD}$ | $V_I$=GND to $V_{CC}$ | $V_{CC}$=1.65V to 1.95V | - | 9.9 | - | pF |
| | | | $V_{CC}$=2.3V to 2.7V | - | 15.8 | - | pF |
| | | | $V_{CC}$=3.0V to 3.6V | - | 21.1 | - | pF |

Note:

[1] Typical values are measured at $T_{amb}$=25℃ and $V_{CC}$=1.2V, 1.8V, 2.5V, 2.7V and 3.3V respectively.

[2] $t_{pd}$ is the same as $t_{PLH}$ and $t_{PHL}$.

[3] Skew between any two outputs of the same package switching in the same direction. This parameter is guaranteed by design.

[4] $C_{PD}$ is used to determine the dynamic power dissipation ($P_D$ in uW).

$P_D=C_{PD}\times V_{CC}^2\times f_i\times N+\sum(C_L\times V_{CC}^2\times f_o)$ where:

$f_i$=input frequency in MHz;

$f_o$=output frequency in MHz;

$C_L$=output load capacitance in pF;

$V_{CC}$=supply voltage in V;

N=number of inputs switching;

$\sum(C_L\times V_{CC}^2\times f_o)$=sum of outputs.

### 3.3.4、AC Characteristics 2

($T_{amb}$=-40℃ to +125℃, voltages are referenced to GND (ground=0V), unless otherwise specified.)

| Parameter | Symbol | Conditions | | Min. | Typ. | Max. | Unit |
|---|---|---|---|---|---|---|---|
| propagation delay | $t_{pd}$ | An to $\overline{Y}n$ see Figure 5 | $V_{CC}$=1.65V to 1.95V | 0.5 | - | 12.7 | ns |
| | | | $V_{CC}$=2.3V to 2.7V | 1.5 | - | 7.3 | ns |
| | | | $V_{CC}$=2.7V | 1.5 | - | 8.5 | ns |
| | | | $V_{CC}$=3.0V to 3.6V | 1.0 | - | 7.5 | ns |
| | | E3 to $\overline{Y}n$ see Figure 5 | $V_{CC}$=1.65V to 1.95V | 1.0 | - | 12.5 | ns |
| | | | $V_{CC}$=2.3V to 2.7V | 1.5 | - | 7.1 | ns |
| | | | $V_{CC}$=2.7V | 1.5 | - | 8.5 | ns |
| | | | $V_{CC}$=3.0V to 3.6V | 1.0 | - | 7.5 | ns |
| | | $\overline{E}n$ to $\overline{Y}n$ see Figure 6 | $V_{CC}$=1.65V to 1.95V | 1.0 | - | 12.8 | ns |
| | | | $V_{CC}$=2.3V to 2.7V | 1.8 | - | 7.3 | ns |
| | | | $V_{CC}$=2.7V | 1.5 | - | 8.0 | ns |
| | | | $V_{CC}$=3.0V to 3.6V | 1.0 | - | 7.5 | ns |
| output skew time | $t_{sk(o)}$ | - | | - | - | 1.5 | ns |

Note:

[1] Typical values are measured at $T_{amb}$=25℃ and $V_{CC}$=1.2V, 1.8V, 2.5V, 2.7V and 3.3V respectively.

[2] $t_{pd}$ is the same as $t_{PLH}$ and $t_{PHL}$.

[3] Skew between any two outputs of the same package switching in the same direction. This parameter is guaranteed by design.

## 4、Testing Circuit

### 4.1、AC Testing Circuit

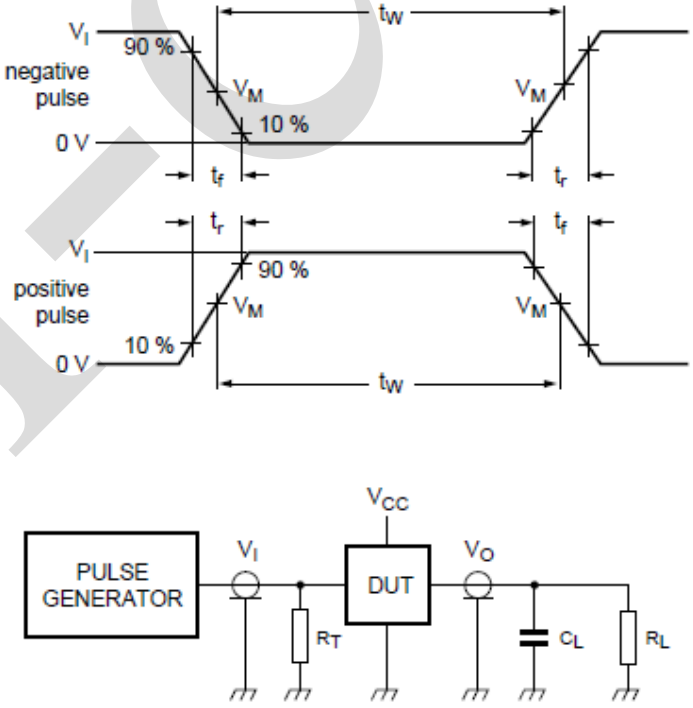


Figure 4. Test circuit for measuring switching times

Definitions for test circuit:

$R_L$=Load resistance.

$C_L$=Load capacitance including jig and probe capacitance.

$R_T$=Termination resistance should be equal to the output impedance $Z_o$ of the pulse generator.

### 4.2、AC Testing Waveforms

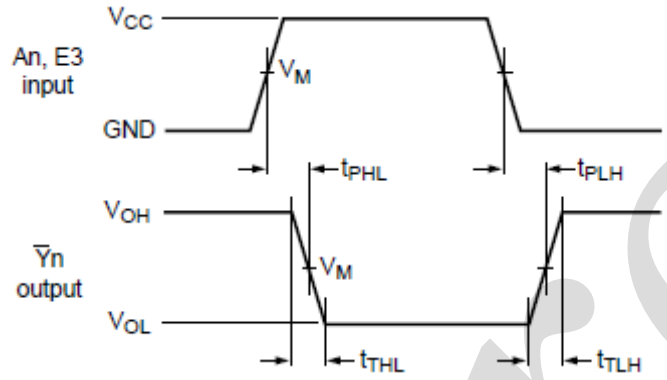


Figure 5. The inputs An, E3 to outputs $\bar{Y}n$ propagation delays

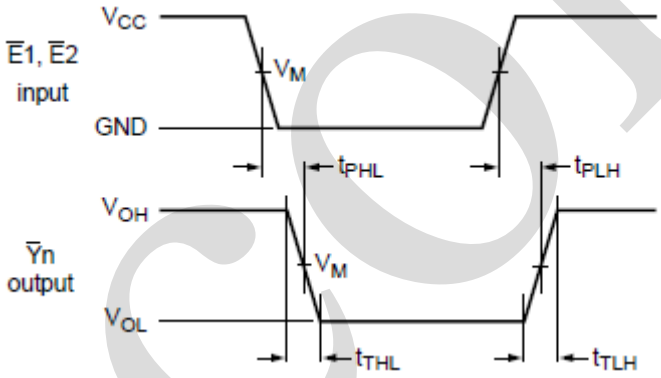


Figure 6. The inputs $\bar{E}n$ to outputs $\bar{Y}n$ propagation delays

### 4.3、Measurement Points

| Supply voltage | Input | Output |
|---|---|---|
| $V_{CC}$ | $V_M$ | $V_M$ |
| < 2.7V | $0.5\times V_{CC}$ | $0.5\times V_{CC}$ |
| ≥ 2.7V | 1.5V | 1.5V |

### 4.4、Test Data

| Supply voltage | Input | | Load | |
|---|---|---|---|---|
| $V_{CC}$ | $V_I$ | $t_r$, $t_f$ | $C_L$ | $R_L$ |
| 1.2V | $V_{CC}$ | ≤ 2.0ns | 30pF | 1kΩ |
| 1.65V to 1.95V | $V_{CC}$ | ≤ 2.0ns | 30pF | 1kΩ |
| 2.3V to 2.7V | $V_{CC}$ | ≤ 2.0ns | 30pF | 500Ω |
| 2.7V | 2.7V | ≤ 2.5ns | 50pF | 500Ω |
| 3.0V to 3.6V | 2.7V | ≤ 2.5ns | 50pF | 500Ω |

# 5、Package Information

## 5.1、DIP16

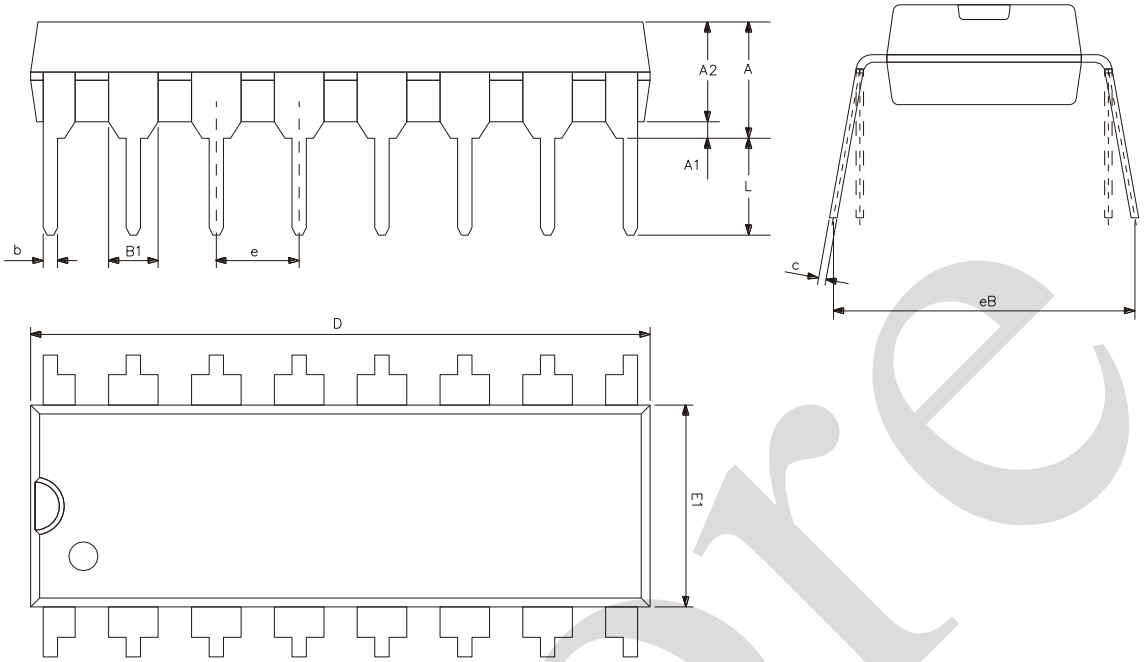


| Symbol | Dimensions (mm) | |
|---|---|---|
| | Min. | Max. |
| A2 | 3.20 | 3.60 |
| A1 | 0.51 | - |
| A | 3.60 | 5.33 |
| L | 3.00 | - |
| b | 0.36 | 0.56 |
| B1 | 1.52 | |
| D | 18.80 | 19.94 |
| E1 | 6.20 | 6.60 |
| e | 2.54 | |
| c | 0.20 | 0.36 |
| eB | 7.62 | 9.30 |

**5.2、SOP16**

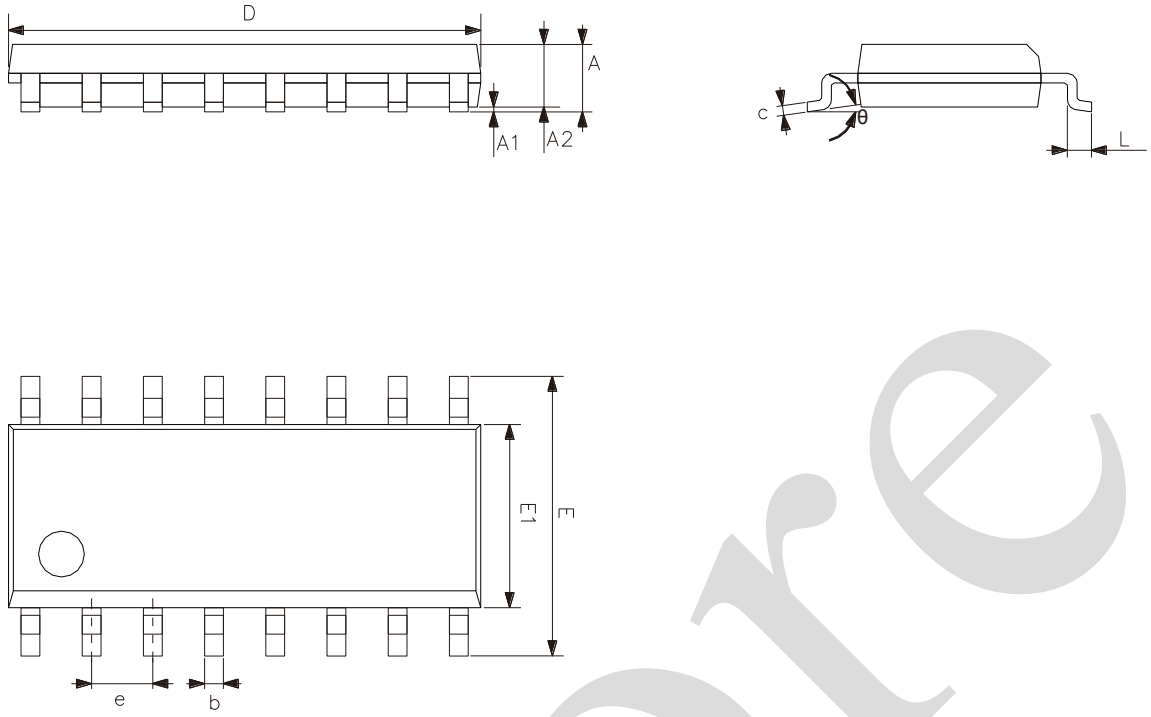


| Symbol | Dimensions (mm) | |
|---|---|---|
| | Min. | Max. |
| A | 1.35 | 1.80 |
| A1 | 0.10 | 0.25 |
| A2 | 1.25 | 1.55 |
| b | 0.33 | 0.51 |
| c | 0.19 | 0.25 |
| D | 9.50 | 10.10 |
| E | 5.80 | 6.30 |
| E1 | 3.70 | 4.10 |
| e | 1.27 | |
| L | 0.35 | 0.89 |
| θ | 0° | 8° |

**5.3、TSSOP16**

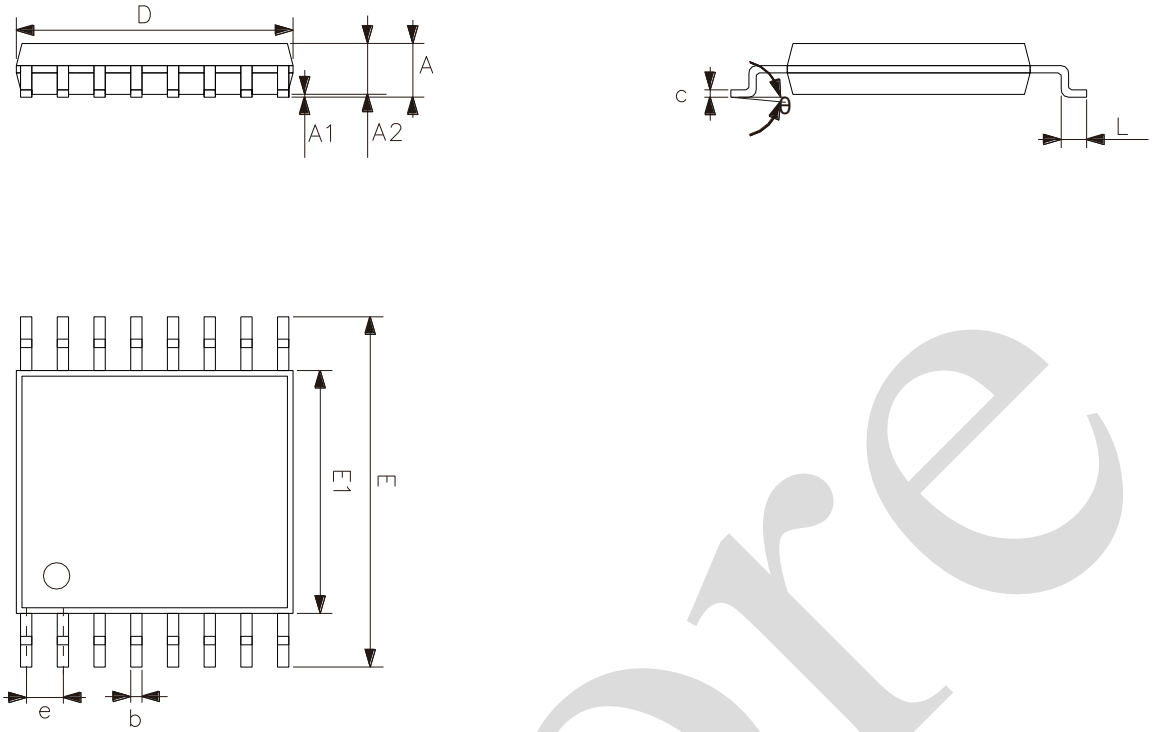


| Symbol | Dimensions (mm) | |
|---|---|---|
| | Min. | Max. |
| A | - | 1.20 |
| A1 | 0.05 | 0.15 |
| A2 | 0.80 | 1.05 |
| b | 0.19 | 0.30 |
| c | 0.09 | 0.20 |
| D | 4.90 | 5.10 |
| E1 | 4.30 | 4.50 |
| E | 6.20 | 6.60 |
| e | 0.65 | |
| L | 0.45 | 0.75 |
| θ | 0° | 8° |

**5.4、DHVQFN16**

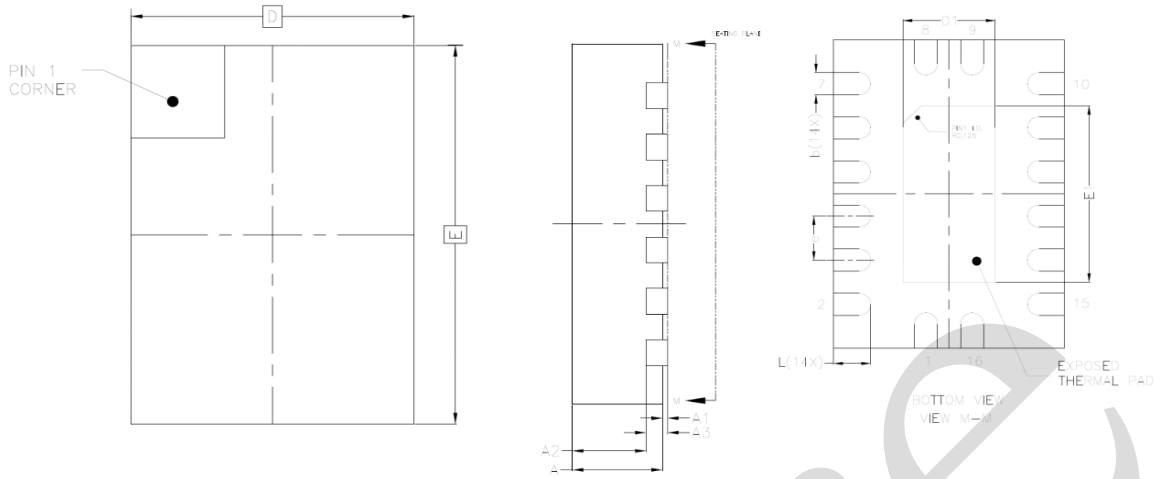


| Symbol | Dimensions (mm) | |
|---|---|---|
| | Min. | Max. |
| A | 0.80 | 1.00 |
| A1 | 0.00 | 0.05 |
| A2 | 0.60 | 0.70 |
| A3 | 0.20 | |
| D | 2.40 | 2.60 |
| E | 3.40 | 3.60 |
| e | 0.50 | |
| b | 0.18 | 0.30 |
| L | 0.30 | 0.50 |
| D1 | 0.85 | 1.15 |
| E1 | 1.85 | 2.15 |

## 6、Statements And Notes

### 6.1、The name and content of Hazardous substances or Elements in the product

| Part name | Hazardous substances or Elements | | | | | | | | | |
|---|---|---|---|---|---|---|---|---|---|---|
| | Lead and lead compounds | Mercury and mercury compounds | Cadmium and cadmium compounds | Hexavalent chromium compounds | Polybrominated biphenyls | Polybrominated biphenyl ethers | Dibutyl phthalate | Butylbenzyl phthalate | Di-2-ethylhexyl phthalate | Diisobutyl phthalate |
| Lead frame | ○ | ○ | ○ | ○ | ○ | ○ | ○ | ○ | ○ | ○ |
| Plastic resin | ○ | ○ | ○ | ○ | ○ | ○ | ○ | ○ | ○ | ○ |
| Chip | ○ | ○ | ○ | ○ | ○ | ○ | ○ | ○ | ○ | ○ |
| The lead | ○ | ○ | ○ | ○ | ○ | ○ | ○ | ○ | ○ | ○ |
| Plastic sheet installed | ○ | ○ | ○ | ○ | ○ | ○ | ○ | ○ | ○ | ○ |
| explanation | ○：Indicates that the content of hazardous substances or elements in the detection limit of the following the SJ/T11363-2006 standard.<br>×：Indicates that the content of hazardous substances or elements exceeding the SJ/T11363-2006 Standard limit requirements. | | | | | | | | | |

### 6.2、Notes

We Recommend you to read this chapter carefully before using this product.

The information in this chapter is provided for reference only and i-Core disclaims any express or implied warranties, including but not limited to applicability, special application or non-infringement of third party rights.

This product is not suitable for critical equipment such as life-saving, life-sustaining or safety equipment. It is also not suitable for applications that may result in personal injury, death, or serious property or environmental damage due to product malfunction or failure. I-Core will not be liable for any damages incurred by the customers at their own risk for such applications.

The customer is responsible for conducting all necessary tests i-Core's application to avoid failure in the application or the application of the customer' s third party users. I-Core does not accept any liability.

The Company reserves the right to change or improve the information published in this chapter at any time. The information in this chapter are subject to change without notice. We recommend the customer to consult our sales staff before purchasing.

Please obtain related materials form i-Core's regular channels and we are not responsible for its content if it is provided by sources other than our company.

In case of any conflict between the Chinese and English version, the version is subject to the Chinese one.

# Unikeyic Electronics

Global Electronic Components Distributor

Click to view pricing, inventory, delivery, and lifecycle information:

## i-CORE:

AIP1117-3.3GD893.TR AIP33624VB24.TR AIP8563SA8.TR AiP650EOSA16.TR AiP74HC595SA16.TR AiP74LVC1G04GB235.TR Aip2003SA16.TR CD4067 AIP1117-3.3GH223.TR AIP74HC165SA16.TR AiP555SA8.TR AiP74HC245TA20.TR AiP74HC595TA16.TR AIP74LVC1G32GB235.TR AiP1302SA8.TR AiP74HC125SA14.TR AiP8002SA8.TR CD4051 CD4051TA16.TR AIP74HC164SA14.TR AIP74LVC1G125GC353.TR AIP74LVC1G17GB235.TR AIP74LVC2G17GB236.TR CD2399GOSA16.TR CS1621CGOVB48.TR M62429 AiP74LVC1G08GB235.TR AIP74LVC1G14GB235.TR AIP74LVC8T245TA24.TR M62429L