标 记 MARK	ECN编号/变更内容 ECN NO/DEFINITION	修 改 REVISE	日 期 DATE	核 准 APPROVE

15	9.50	7.00	8.07	8.89	8.00	40	22.00	19.50	20.57	21.39	20.50
14	9.00	6.50	7.57	8.39	7.50	34	19.00	16.50	17.57	18.39	17.50
13	8.50	6.00	7.07	7.89	7.00	32	18.00	15.50	16.57	17.39	16.50
12	8.00	5.50	6.57	7.39	6.50	30	17.00	14.50	15.57	16.39	15.50
10	7.00	4.50	5.57	6.39	5.50	28	16.00	13.50	14.57	15.39	14.50
9	6.50	4.00	5.07	5.89	5.00	26	15.00	12.50	13.57	14.39	13.50
8	6.00	3.50	4.57	5.39	4.50	24	14.00	11.50	12.57	13.39	12.50
7	5.50	3.00	4.07	4.89	4.00	22	13.00	10.50	11.57	12.39	11.50
6	5.00	2.50	3.57	4.39	3.50	20	12.00	9.50	10.57	11.39	10.50
5	4.50	2.00	3.07	3.89	3.00	18	11.00	8.50	9.57	10.39	9.50
4	4.00	1.50	2.57	3.39	2.50	16	10.00	7.50	8.57	9.39	8.50
Number of Contacts	DIM A	DIM B	DIM C	DIM D	DIM E	Number of Contacts	DIM A	DIM B	DIM C	DIM D	DIM E

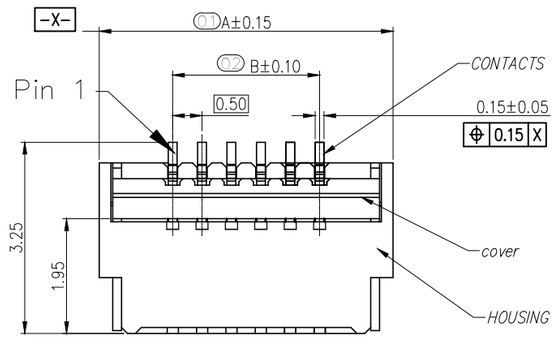

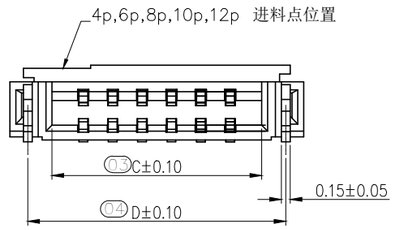

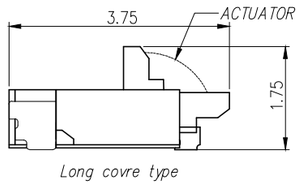

Long covre type

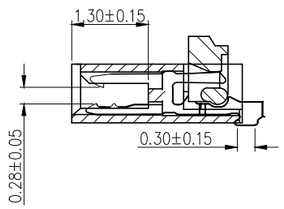

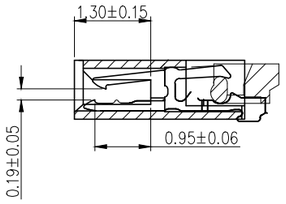

NOTE:
1. MATERIAL:
   HOUSING: LCP COLOR: NATURAL.
   CONTACTS: COPPER ALLOY.
   PEG: COPPER ALLOY.
   ACTUATOR: LCP OR PA. COLOR:BLACK
2. RATING:
   OPERATING VOLTAGE: 50Vrms AC.
   CURRENT RATING: 0.5A.
   OPERATING TEMPERATURE: -55℃~+85℃.
   OPERATING HUMIDITY RANGE: RELATIVE HUMIDITY 90% MAX.(NO CONDENSATION)
   STORAGE TEMPERATURE RANGE: -10℃~+50℃.
   STORAGE HUMIDITY RANGE: RELATIVE HUMIDITY 90% MAX.(NO CONDENSATION)

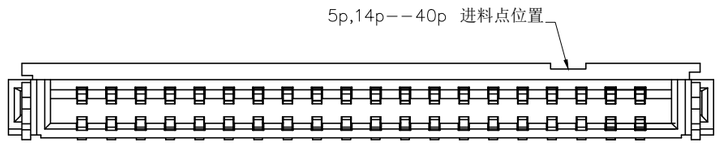

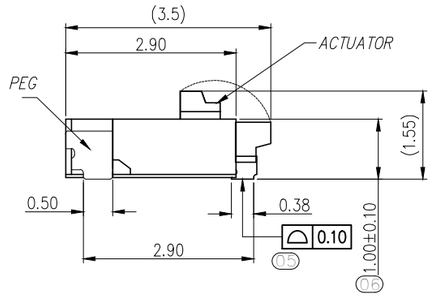

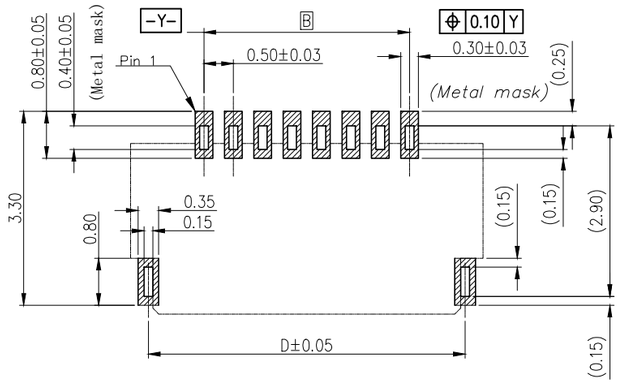

Recommended PCB mounting pattern and metal mask dimensions
Recommended metal mask thickness: t=0.1

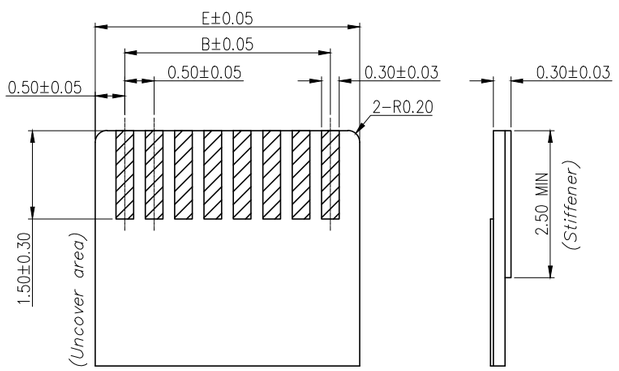

Recommended FPC/FFC Dimensions

序 号	品 名	材 质	电镀/颜色	备 注
2	端子	铜	点镀金	
1	基座	LCP	本色	

深圳市虹成电子有限公司	品 名 TITLE	FPC座	
	料 号 PART NO	HC-FPC-0.5-12P-FHH10	
GENERAL TOLERANCES (UNLESS SPECIFIED)	比 列 SCALE	1:1	
X.X : ±0.30 X.X° : ±5°	单 位 UNIT	MM	制 图 DRAW: AhYe
X.XX : ±0.20 X.XX° : ±2°	张 数 PART NO	1 OF 1	审 核 CHECKED: 夏操云
	版 本 REV	A	批 准 APPROVE: 赵亮亮

Unikeyic Electronics

Global Electronic Components Distributor

Click to view pricing, inventory, delivery, and lifecycle information:

HC:

HC-USB3.0-L257-J HC-FPC-0.5-6P-CSH20 HC-PM254-8.5H-2x30PZ HC-PZ127-7.2L-2x3PS
HC-USB3.0-C34-P HC-PM254-8.5H-1x21PZ HC-PZ254-11.5L-1x20PZ HC-PZ254-11.5L-2x18PZ
HC-USB2.0-L100-093P HCZZ0451-4 HCZZ0514-6 HCZZ0576-5 HC-FPC-0.5-10P-FH20 HCZZ0001-2
HC-FPC-0.5-50P-FHH20 HC-PM200-4.3H-2x8PS HC-PM254-5.0H-2x10PZ HCZZ0451-6
HC-PM200-4.3H-2x20PZ HC-PM200-4.3H-2x6PS HC-PZ254-11.5L-1x10PZ HC-USB3.0-C26
HC-USB3.0-L175-2X1-J HC-PM254-8.5H-2x20PS HCZZ0032-6 HC-PHB2.0-2x4AW
HC-PZ254-13.8L-1x6PWA HC-FPC-0.5-24P-FH20 HC-FPC-0.5-40P-FH20 HC-PHB2.0-2x5A