SPECIFICATION CONTROL DRAWING

REV:	DCR #	DATE:
A	D060257	AUG 17, 2006

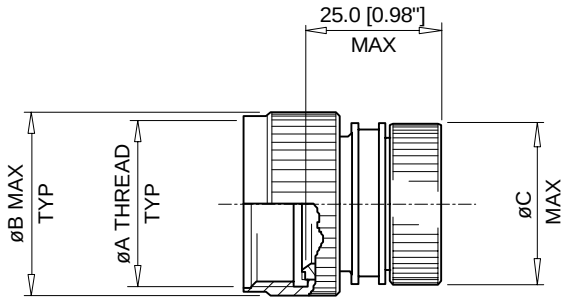

STRAIGHT ADAPTOR

-00

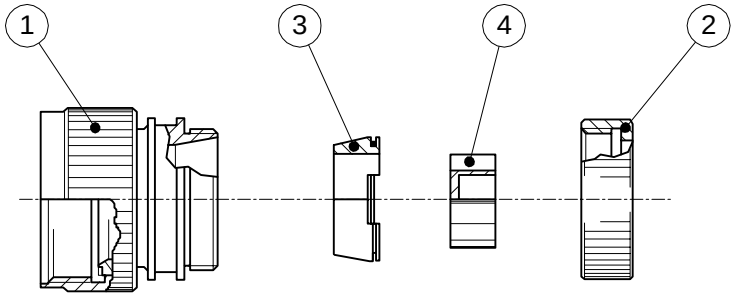

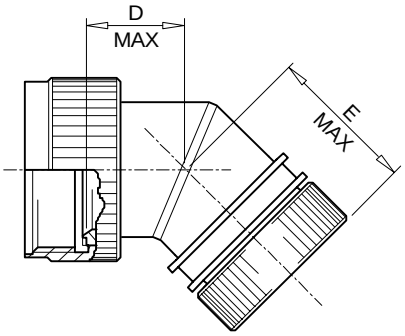

45º ADAPTOR

-45

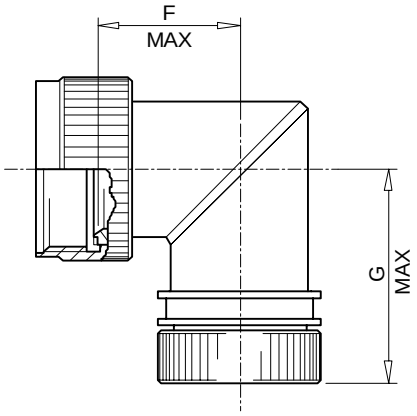

90º ADAPTOR

-90

© 2006 Tyco Electronics Corporation. All rights reserved.

tyco Electronics

Wire and Harnessing Products

Tyco Electronics
300 Constitution Drive
Menlo Park, CA 94025
USA

TITLE:

HEXASHIELD ADAPTOR FOR CODE 54 CONNECTORS-PLAIN CLAMPING NUT

UNLESS OTHERWISE SPECIFIED DIMENSIONS ARE IN MILLIMETERS.
INCH DIMENSIONS ARE SHOWN IN BRACKETS

This drawing and the information set forth hereon is the property of Tyco Electronics and is to be held in trust and confidence. Publication, duplication, disclosure or use for any other purpose not expressly authorized in writing by Tyco Electronics is prohibited.

Tyco Electronics reserves the right to amend this drawing at any time. Users should evaluate the suitability of the product for their application.

DOCUMENT NO.

HEX54-SC-YY-YY-AYY-1-YY

DRAWN:	DATE:	FILE:	SCALE:	SHEET:
IRT	MAY, 2001	D060257	NONE	1 OF 4

Downloaded from Arrow.com.

SPECIFICATION CONTROL DRAWING

REV:	DCR #	DATE:
A	D060257	AUG 17, 2006

KIT DESCRIPTION

ITEM	DESCRIPTION	MATERIAL
1	BODY ASSEMBLY	NUT - STAINLESS STEEL
		BODY - ALUMINIUM ALLOY
2	CLAMPING NUT - PLAIN	ALUMINIUM ALLOY
3	CONIC RING	ALUMINIUM ALLOY
4	STAR	ALUMINIUM ALLOY

TABLE OF DIMENSIONS

Order Number	Shell Size (see overleaf)		ØA Thread UNF/UNEF-2B	ØB Max	ØC Max	D Max	E Max	F Max	G Max	Ferrule Quantity	
	Type A	Type B								Std.	Opt.
09	08	N/A	0.5000”-20	16.0 [0.63”]	17.5 [0.69”]	12.5 [0.49”]	25.5 [1.00”]	17.0 [0.67”]	30.5 [1.20”]	1	-
11	10	N/A	0.6250”-24	22.0 [0.87”]	21.5 [0.85”]	13.0 [0.51”]	26.0 [1.02”]	17.5 [0.69”]	30.5 [1.20”]	2	-
13	12	07	0.7500”-20	25.0 [0.98”]	22.5 [0.89”]	14.0 [0.55”]	26.5 [1.04”]	19.0 [0.75”]	32.0 [1.26”]	3	-
15	14	12	0.8750”-20	30.0 [1.18”]	25.5 [1.00”]	14.5 [0.57”]	27.5 [1.08”]	20.5 [0.81”]	33.5 [1.32”]	5	-
17	16	19	1.0000”-20	33.0 [1.30”]	28.5 [1.12”]	15.0 [0.59”]	28.0 [1.10”]	22.0 [0.87”]	35.0 [1.38”]	6	-
19	18	27	1.0625”-18	37.0 [1.46”]	31.5 [1.24”]	15.5 [0.61”]	28.5 [1.12”]	23.5 [0.93”]	36.5 [1.44”]	7	-
21	20	37	1.1875”-18	38.0 [1.50”]	35.0 [1.38”]	16.5 [0.65”]	29.0 [1.14”]	25.5 [1.00”]	38.5 [1.52”]	9	11
23	22	N/A	1.3125”-18	41.0 [1.61”]	38.0 [1.50”]	17.0 [0.67”]	30.0 [1.18”]	27.0 [1.06”]	40.0 [1.57”]	10	13
25	24	N/A	1.4375”-18	46.0 [1.81”]	41.0 [1.61”]	18.0 [0.71”]	31.0 [1.22”]	28.5 [1.12”]	41.5 [1.63”]	12	17

tyco Electronics

Wire and Harnessing Products

Tyco Electronics
300 Constitution Drive
Menlo Park, CA 94025
USA

TITLE:

HEXASHIELD ADAPTOR FOR CODE 54 CONNECTORS-PLAIN CLAMPING NUT

UNLESS OTHERWISE SPECIFIED DIMENSIONS ARE IN MILLIMETERS.
INCH DIMENSIONS ARE SHOWN IN BRACKETS

This drawing and the information set forth hereon is the property of Tyco Electronics and is to be held in trust and confidence. Publication, duplication, disclosure or use for any other purpose not expressly authorized in writing by Tyco Electronics is prohibited.

Tyco Electronics reserves the right to amend this drawing at any time. Users should evaluate the suitability of the product for their application.

DOCUMENT NO.

HEX54-SC-YY-YY-AYY-1-YY

DRAWN:	DATE:	FILE:	SCALE:	SHEET:
IRT	MAY, 2001	D060257	NONE	2 OF 4

Downloaded from Arrow.com.

SPECIFICATION CONTROL DRAWING

REV:	DCR #	DATE:
A	D060257	AUG 17, 2006

PART NUMBERING

HEX54 – S C – 00 – 21 – A9 – 1 – DS

- CONNECTOR CODE NUMBER
  HEX54 - SEE APPLICATIONS OVERLEAF
- MATERIAL CODE:
  S = STAINLESS STEEL ACCESSORY NUT
  ALUMINIUM ALLOY REMAINDER
- PLATING CODE:
  C = ELECTROLESS NICKEL TO MIL-C-26074
- BODY STYLE
  00 = STRAIGHT
  45 = 45º
  90 = 90º
- ORDER NUMBER
- FERRULE QUANTITY CODE
- 1 = PLAIN CLAMPING NUT
- DS = DRILLED STAR - OPTIONAL - SEE NOTE 1

APPLICATION

- These adaptors are designed to be mounted on the following connectors:

MIL-C-26482 Series II MIL-C-83723 Series I and III MIL-C-5015 HE312	Shell Size Type A
MIL-C-81703 Series III HE312 DBAD	Shell Size Type B

- They are qualified to the Raychem specification RB-114, when installed on metallic Mil-Specification circular connectors only.
- They are designed primarily for open wire bundle installation but are also designed to accept Raychem heat shrink moulded parts where strain relief is required – see illustration.

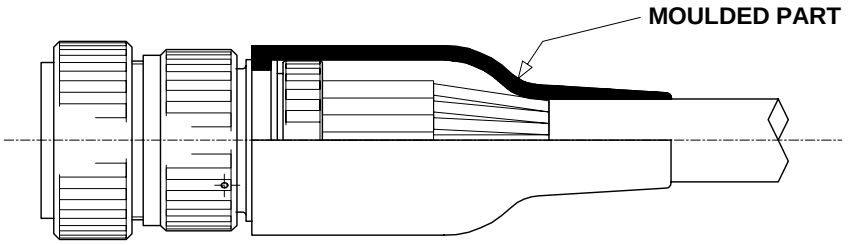

- Use in conjunction with the ferrules HET-A-0XX, which are purchased separately. Refer to HET-A-0XX S.C.D. for relevant selection details.

INSTALLATION

- See Installation Procedure RPIP-696-04.

tyco / Electronics *Wire and Harnessing Products*	Tyco Electronics 300 Constitution Drive Menlo Park, CA 94025 USA	TITLE: **HEXASHIELD ADAPTOR FOR CODE 54 CONNECTORS-PLAIN CLAMPING NUT**
UNLESS OTHERWISE SPECIFIED DIMENSIONS ARE IN MILLIMETERS. INCH DIMENSIONS ARE SHOWN IN BRACKETS	This drawing and the information set forth hereon is the property of Tyco Electronics and is to be held in trust and confidence. Publication, duplication, disclosure or use for any other purpose not expressly authorized in writing by Tyco Electronics is prohibited. Tyco Electronics reserves the right to amend this drawing at any time. Users should evaluate the suitability of the product for their application.	DOCUMENT NO. **HEX54-SC-YY-YY-AYY-1-YY**
DRAWN: IRT / DATE: MAY, 2001		FILE: D060257 / SCALE: NONE / SHEET: 3 OF 4

Downloaded from Arrow.com.

SPECIFICATION CONTROL DRAWING

REV:	DCR #	DATE:
A	D060257	AUG 17, 2006

PACKAGING
- All components are supplied in a plastic bag.

NOTES!
1. Item 4 - Star - is **not** supplied with Hexashield Order Number 09.

2. The DS option, illustrated below, is for a Drilled Star that is available on sizes 15 to 25 only. This option is to allow unshielded wires to pass through the assembly.

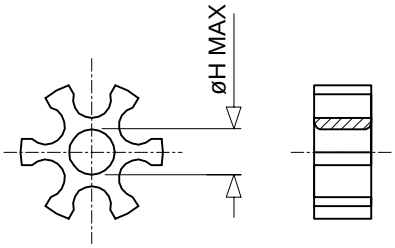

STAR SIZE	15	17	19	21	23	25
ØH MAX	3.0 [0.12"]	6.0 [0.24"]	9.0 [0.35"]	12.0 [0.47"]	15.0 [0.59"]	18.0 [0.71"]

3. Where the ferrule quantities required are standard, the item 4 - Star - is also standard.
   If the optional quantity is selected then 2 items 4 will be supplied - one "split" and the other one standard.
   See below for illustration.

EXAMPLE: FERRULE QUANTITY CODE -A13

-A13 = -A10 SPLIT STAR + -A3 STANDARD STAR

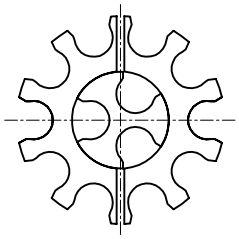

4. Assembly is to be permanently marked with Code Identity Number and Part Number.
   (e.g. 06090 HEX54-SC-00-21-A9-1)

tyco / Electronics

Wire and Harnessing Products

Tyco Electronics
300 Constitution Drive
Menlo Park, CA 94025
USA

TITLE:

HEXASHIELD ADAPTOR FOR CODE 54 CONNECTORS-PLAIN CLAMPING NUT

UNLESS OTHERWISE SPECIFIED DIMENSIONS ARE IN MILLIMETERS.
INCH DIMENSIONS ARE SHOWN IN BRACKETS

This drawing and the information set forth hereon is the property of Tyco Electronics and is to be held in trust and confidence. Publication, duplication, disclosure or use for any other purpose not expressly authorized in writing by Tyco Electronics is prohibited.

Tyco Electronics reserves the right to amend this drawing at any time. Users should evaluate the suitability of the product for their application.

DOCUMENT NO.

HEX54-SC-YY-YY-AYY-1-YY

DRAWN:	DATE:	FILE:	SCALE:	SHEET:
IRT	MAY, 2001	D060257	NONE	4 OF 4

Downloaded from Arrow.com.