TECH PUBLIC
台舟电子

TPESD2USB5UXT-QR

Low Capactionce 2-Line Uni-directional ESD protection diode

WWW.TECHPUBLIC.COM

Features

- Ultra low capacitance: 0.35pF typical
- Ultra low leakage: nA level
- Low operating voltage: 5V
- Low clamping voltage
- 2-pin leadless package
- Complies with following standards:
- – IEC 61000-4-2 (ESD) immunity test
  Air discharge: ±20kV
  Contact discharge: ±15kV
- – IEC61000-4-5 (Lightning)4A (8/20 μs)
- RoHS Compliant
- Lead Finish: NiPdAu

Mechanical Characteristics

- Package: SOT23
- Lead Finish: Matte Tin
- Case Material: “Green” Molding Compound.
- Moisture Sensitivity: Level 3 per J-STD-020
- Terminal Connections: See Diagram Below
- Shipping Qty :3000pcs/7Inch Tape & Reel

Applications

- USB 2.0 and USB 3.0
- SATA and eSATA
- DVI
- Set Top Box
- Portable Electronics

Dimensions and Pin Configuration

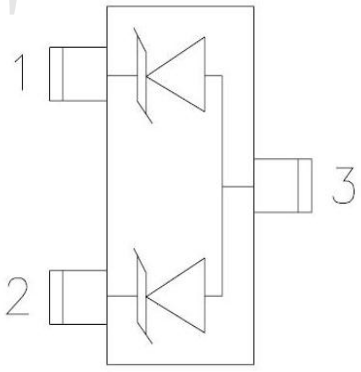

Absolute Maximum Ratings (Tamb=25°C unless otherwise specified)

Parameter	Symbol	Value	Unit
Peak Pulse Power (8/20μs)	Ppk	100	W
Peak Pulse Current (8/20μs)	I_{PP}	4	A
ESD per IEC 61000−4−2 (Air) ESD per IEC 61000−4−2 (Contact)	V_{ESD}	± 20 ± 15	kV
Operating Temperature Range	T_J	−55 to +125	°C
Storage Temperature Range	Tstg	−55 to +150	°C

Electrical Characteristics (TA=25°C unless otherwise specified)

Parameter	Symbol	Min	Typ	Max	Unit	Test Condition
Reverse Working Voltage	V_{RWM}			5	V	
Breakdown Voltage	V_{BR}	6			V	I_T = 1mA
Reverse Leakage Current	I_R			0.08	μA	V_{RWM} = 5V
Forward Voltage	V_F		0.8	1.2	V	I_F = 10mA
Clamping Voltage	V_C			15	V	I_{PP} = 1A (8 x 20μs pulse)
Clamping Voltage	V_C			23	V	I_{PP} = 4A (8 x 20μs pulse)
Junction Capacitance	C_J			0.7	pF	VR=0, f=1MHz，Pin 1 to Pin 3 or Pin 2 to Pin 3
Junction Capacitance	C_J		0.35		pF	VR=0, f=1MHz，Pin 1 to Pin 2

Typical Performance Characteristics (T_A=25°C unless otherwise Specified)

Fig1. 8/20μs Pulse Waveform

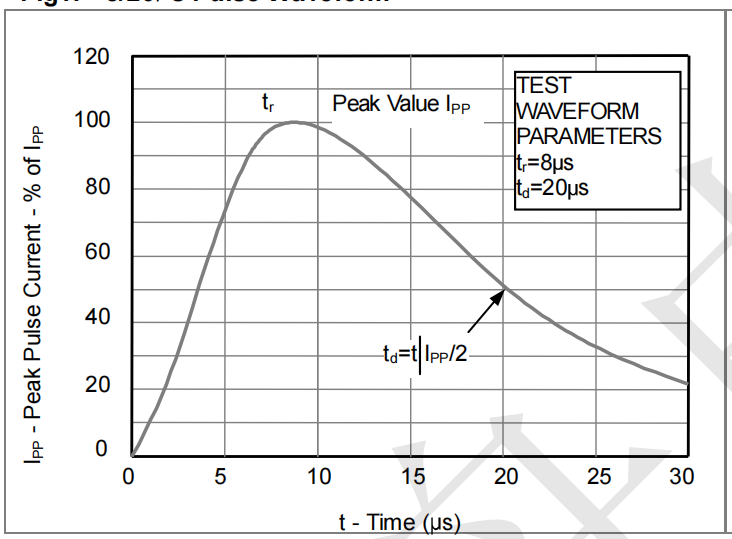

Fig2. ESD Pulse Waveform (according to IEC 61000-4-2)

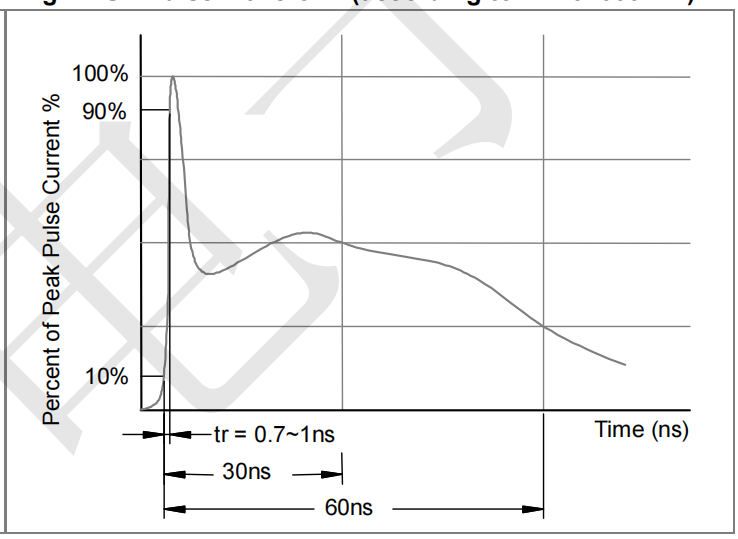

Fig3. Power Derating Curve

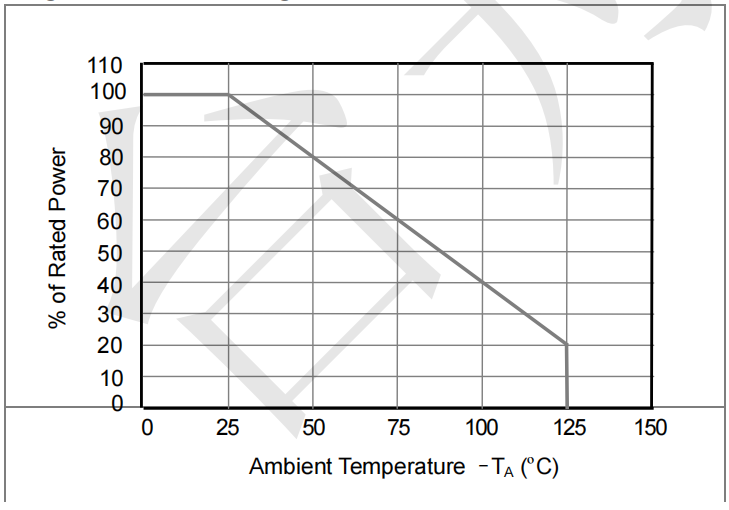

Outline Drawing - SOT23

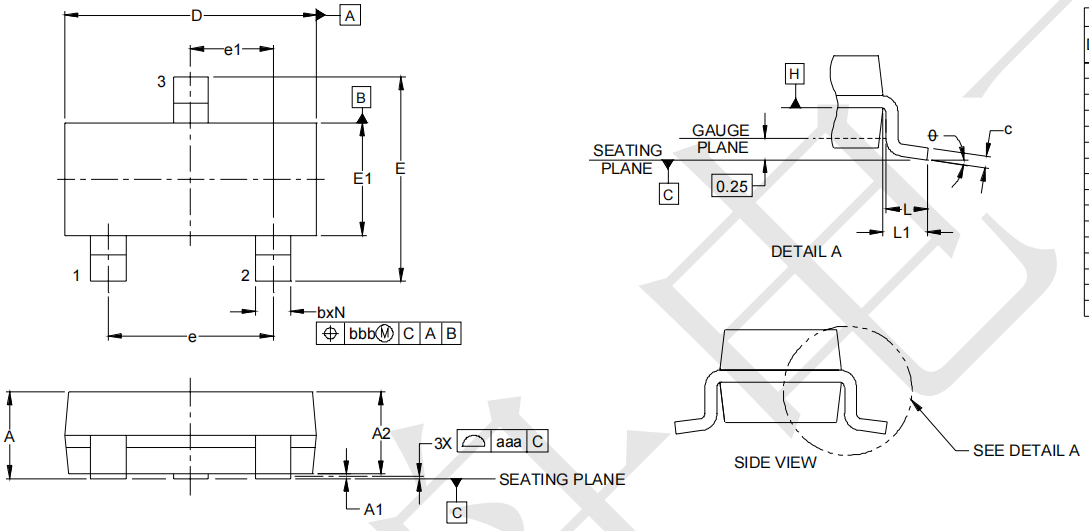

DIM	DIMENSIONS					
	INCHES			MILLIMETERS		
	MIN	NOM	MAX	MIN	NOM	MAX
A	.035	-	.044	0.89	-	1.12
A1	.000	-	.004	0.01	-	0.10
A2	.035	.037	.040	0.88	0.95	1.02
b	.012	-	.020	0.30	-	0.51
c	.003	-	.007	0.08	-	0.18
D	.110	.114	.120	2.80	2.90	3.04
E	.082	.093	.104	2.10	2.37	2.64
E1	.047	.051	.055	1.20	1.30	1.40
e	.075			1.90 BSC		
e1	.037			0.95 BSC		
L	.015	.020	.024	0.40	0.50	0.60
L1	.022			(0.55)		
N	3			3		
θ	0°	-	8°	0°	-	8°
aaa	.004			0.10		
bbb	.008			0.20		

Land Pattern - SOT23

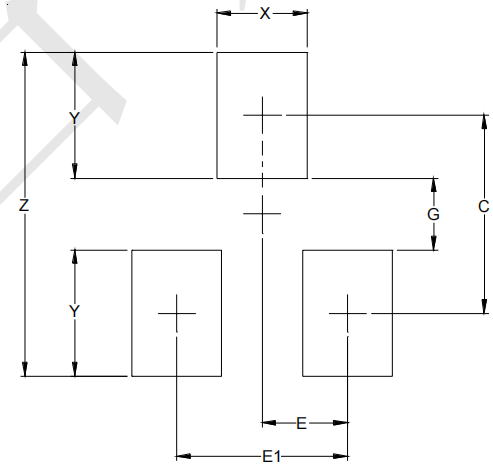

DIMENSIONS		
DIM	INCHES	MILLIMETERS
C	(.087)	(2.20)
E	.037	0.95
E1	.075	1.90
G	.031	0.80
X	.039	1.00
Y	.055	1.40
Z	.141	3.60

Unikeyic Electronics

Global Electronic Components Distributor

Click to view pricing, inventory, delivery, and lifecycle information:

TECH PUBLIC:

IRF5802TRPBF-TP SIL2324A-TP BZX84C16 DDTA143ZCA TPESD05R4UD TPESDA17P100-1U2M BV03CWT QM3003J-TP SS510F TPAX811MS4 TPNTD20P06LT4G XP202A0003PR-TP TPAX809SS3 TPD2E2U06DRLR-TP XC6219B332MR FDN335N LM337BD2TR4G-TP SS56C TPMCP112T-290E/TT 0402ESDA-18N-TP TPESD0402G08V TPESD0504S6-A TPSTM1001SWX6F PESD5V0F1BSF-TP SMAJ13CA TP3722S8 TPDMG6602SVT TPESD0512S4-A BZT52C6V2S PNTK3139PT5G