RoHS Compliant

REV.	ZONE	DESCRIPTION	DESIGN	DATE
C		UPGRADE DRAWING		2025.05.09
D		载带高度变更		2025.07.29

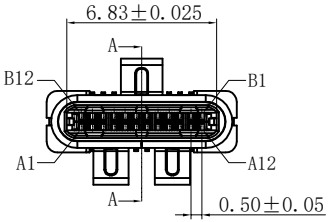

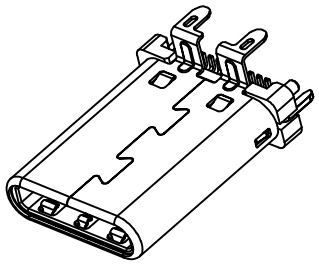

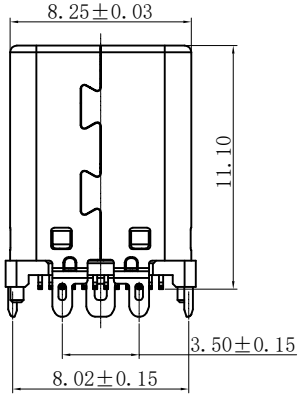

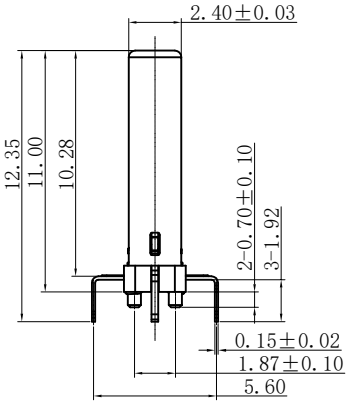

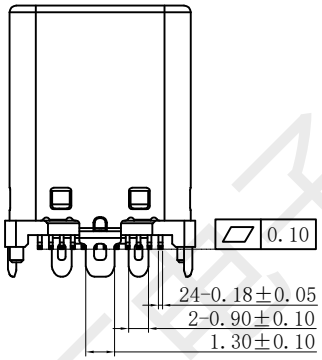

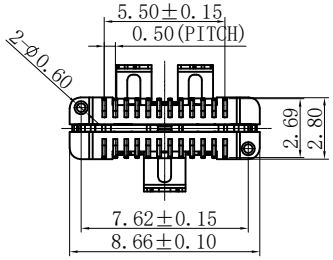

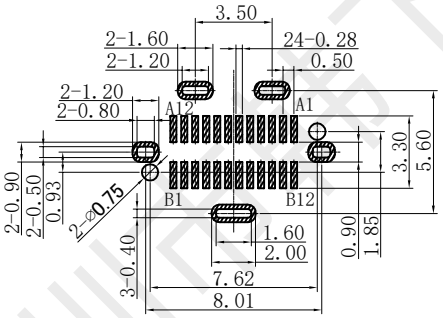

RECOMMENDED PCB LAYOUT(t=0.80±0.05)
COMPONENT SIDE(GENERAL TOLERANCE:±0.05)

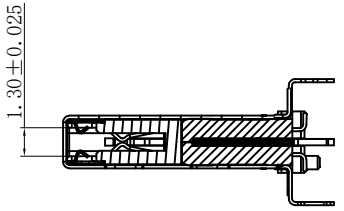

SECTION: A-A
SCALE 1:1

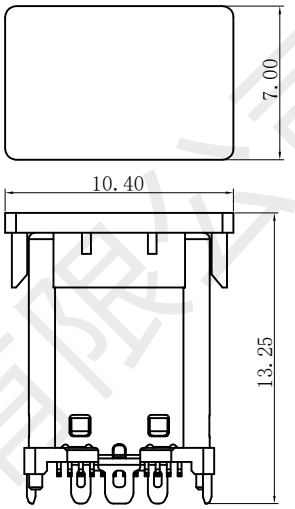

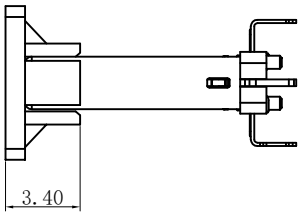

Added suction cap view
SCALE 1:1

NOTES:

SPECIFICATION:

1. Rated voltage: 5.0V /5.0A
2. VOLTAGE: 100 VAC
3. TEMPERATURE RANGE: -30 ° C ~ 85 ° C
4. CONTACT RESISTANCE: 40 MILLIONHM MAX.
5. INSULATION RESISTANCE: 100 MEGOHMS MIN.
6. LNSERTION FORCE : 5N~20N
7. UNMATING FORCE: 8N~20N
8. DURABILITY: 10,000 CYCLES

PIN	SIGNAL NAME	PIN	SIGNAL NAME
A1	GND	B12	GND
A2	SSTXP1	B11	SSRXP1
A3	SSTXN1	B10	SSRXN1
A4	VBUS	B9	VBUS
A5	CC1	B8	SBU2
A6	DP1	B7	DN2
A7	DN1	B6	DP2
A8	SBU1	B5	CC2
A9	VBUS	B4	VBUS
A10	SSRXN2	B3	SSTXN2
A11	SSRXP2	B2	SSTXP2
A12	GND	B1	GND

NO.	DESCRIPTION	MATERIAL	REMARKS	Q'TY
6	HOUSING	HIGH TEMPERATURE PLASTIC, PA9T	BLACK	1PCS
5	CAP	HIGH TEMPERATURE PLASTIC, LCP	BLACK	1PCS
4	EMI	STAINLESS STEEL, SUS304	---	2PCS
3	LATCH	STAINLESS STEEL, SUS301	TIN: 80-120u"Min./Ni base: 50u"Min. Plated	1PCS
2	SHELL	STAINLESS STEEL, SUS304	Ni: 50u"Min. Plated	1PCS
1	INSERT MOLDING	HIGH TEMPERATURE PLASTIC (HOUSING, LCP; TERMINAL1, C5191)	CONTACT:Au:1u"Min. Ni base50u"Min., TIN: 50-120u",BLACK	2PCS

X.	±0.50	X.°	± 2°
.X	±0.30	.X°	± 1°
.XX	±0.20	.XX°	± 0.5°
.XXX	± 0.10		

UNITS mm
MAT'L
FINISH
Q'TY

深圳市韩下电子有限公司

TITLE: HX TYPE C-M 24P V-SMT type c USB

APPD: 罗小春
CHKD: 张伟
DR: 黄彬

PART NO. :

SCALE	SHEET	REV.
1/1	1/2	D

深圳市韩下电子有限公司

深圳市韩下电子有限公司
Shenzhen Hanxia Electronic Co., Ltd
Tel: 0755-23086569

承　认　书

SPECIFICATION FOR APPROVAL

产 品 编 码
Material code: _____

产品名称 Project：USB连接器

规格型号 Part No：HX TYPE C-M 24P V-SMT type c USB

贵公司承认印 Approal slgnatures

料 号/Part No.	签　章/Signatures

日期 Date:

拟制/Drawn	黄彬	深圳市韩下电子有限公司 工程专用章
审核/Check	张伟	
批准/Approved	罗小春	

深圳市韩下电子有限公司