Features/Benefits

- **Designed for automatic or manual insertion**
- **Cambered terminals to ensure self retention**
- **Top or side actuated**
- **Large choice of caps**
- **RoHS compliant and compatible**

Typical Applications

- **Automotive**
- **Industrial**
- **Telecommunication networks**



Specification

CONTACT ARRANGEMENT: SPST, N.O.
DOUBLE OVERMOLDING ON TERMINAL
SEALING: IP60
TERMINALS: PC pins, ground pin optional

Mechanical

Type	Actuation force N	Operating life (operations)	Travel to make
KSA0M211	1 - 1,8	100,000	0,5 ± 0,2
KSA0M311	1 - 1,8	1,000,000	0,5 ± 0,2
KSA0M411	2,25 - 3,75	100,000	0,6 ± 0,2
KSA0M511	3,5 - 6,5	100,000	0,7 ± 0,2
KSA0M911	2,25 - 3,75	500,000	0,6 ± 0,2
KSL0M211	1 - 1,8	100,000	0,5 ± 0,2
KSL0M311	1 - 1,8	1,000,000	0,5 ± 0,2
KSL0M411	2,25 - 3,75	100,000	0,6 ± 0,2
KSL0M511	3,5 - 6,5	100,000	0,7 ± 0,2
KSL0M911	2,25 - 3,75	500,000	0,6 ± 0,2

NOTE: Other versions in terms of force, termination length and corrosion protection available. Please contact your sales representative.
This data sheet does not provide enough information for applications which require a certain level of quality or safety such as automotive, medical systems, safety equipment. Please contact your sales representative to get contractual specification package.

Electrical

	Silver	Gold
MAXIMUM POWER:	1 VA	0.2 VA
MAXIMUM VOLTAGE:	32 VDC	32 VDC
MINIMUM VOLTAGE:	20 mV	20 mV
MAXIMUM CURRENT:	50 mA	10 mA
MINIMUM CURRENT:	1 mA	1 mA

DIELECTRIC STRENGTH: 300 Vrms
CONTACT RESISTANCE: < 100m Ω
INSULATION RESISTANCE (100 V): > 10^9 Ω
BOUNCE TIME: < 1 ms

Environmental

	Silver	Gold
OPERATING TEMPERATURE:	-40°C to 85°C	-40°C to 125°C
STORAGE TEMPERATURE:	-40°C to 85°C	-55°C to 125°C

Process

Wave soldering compatible with lead free soldering profile.

Packaging

Can be delivered in tubes of 65 pieces for automatic insertion or in boxes of 500 pieces for manual insertion (250 pieces for KSL, KSLV, KSAV).

How To Order

Our easy build-a-switch concept allows you to mix and match options to create the switch you need. To order, select desired option from each category and place it in the appropriate box.

However, please note that all the combinations of these options are not feasible.
For any part number different from those listed above, please consult your local representative.

SWITCH K S [ ] [ ] [ ] [ ] [ ] 1 L F T

Actuator Type
A Short hard plastic
L Long hard plastic

Ground Terminal
0 Without
1 With*

Insertion
M Manual (bulk packaging)
A Automatic (tube packaging)
V Vertical (bulk packaging)*

Contact Material
1 Silver contacts
3 Gold contacts

Operation Force
2 1.3 N (130 grams), 100,000 operations
3 1.3 N (130 grams), 1,000,000 operations
4 3 N (300 grams), 100,000 operations
5 5 N (500 grams), 100,000 operations
9 3 N (300 grams), 500,000 operations

RoHS compliant and compatible. Tin plated.

***Note:** "1" Ground terminal not compatible with "V" insertion

BUTTONS Buttons must be ordered separately and will be supplied in bulk.

B T N K 0 [ ] [ ]

Button Style
K01 10 mm square snap-on
K02 ø8 mm round snap-on
K03 8,5 x 3,8 mm single floating
K04 18,5 x 3,8 mm double floating
K05 5 mm square
K06 10 x 2,5 mm snap-on handle
K07 5 mm square
K08 9,9 x 5 mm rectangular
K09 ø6,2 mm round

Button Color
10 Dark gray
20 Light gray
30 Yellow
40 Red
50 Green
60 Blue
70 Gray-blue
80 Ivory
90 Black

***NOTE**: Please note that all buttons are not RoHS compliant. Please check the compliance with your C&K sales representative.

KSA & KSL Series
Sealed Tact Switch

ACTUATOR TYPE

KSA & KSL



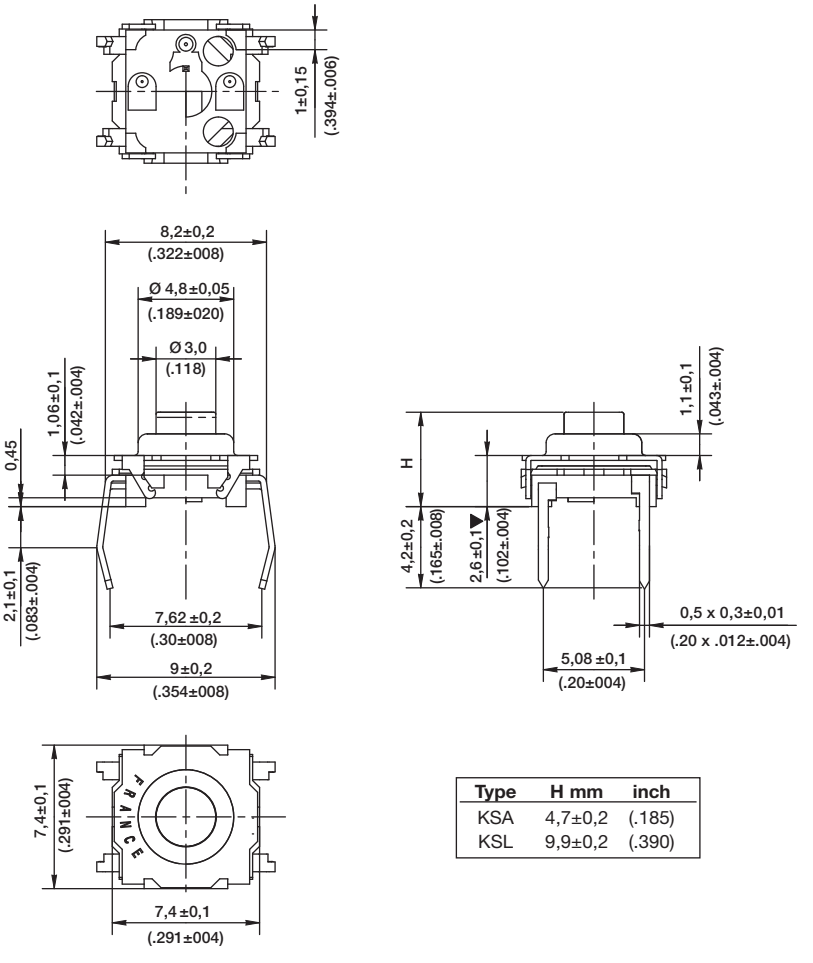

Type	H mm	inch
KSA	4,7±0,2	(.185)
KSL	9,9±0,2	(.390)

GROUND TERMINAL

0 WITHOUT

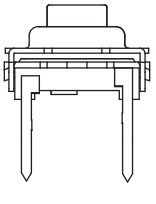

1* WITH

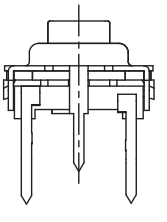

*Not compatible with "V" insertion

First Angle Projection

Dimensions are shown: mm (inches)
Specifications and dimensions subject to change

INSERTION

M MANUAL (BULK PACKAGING)

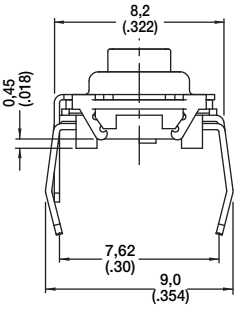

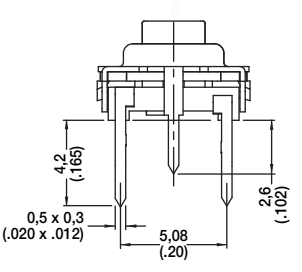

PCB LAYOUT

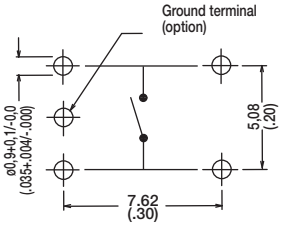

A AUTOMATIC (TUBE PACKAGING, 65 PIECES PER TUBE)

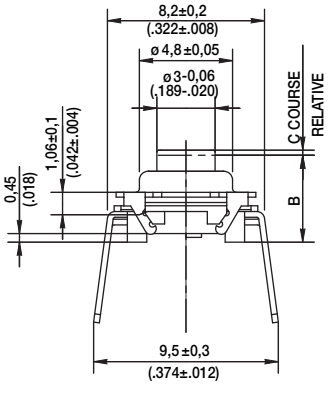

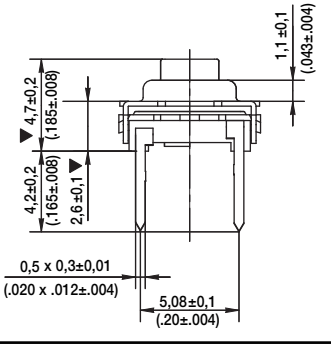

PCB LAYOUT

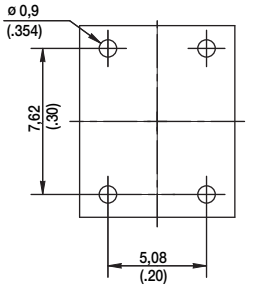

V VERTICAL

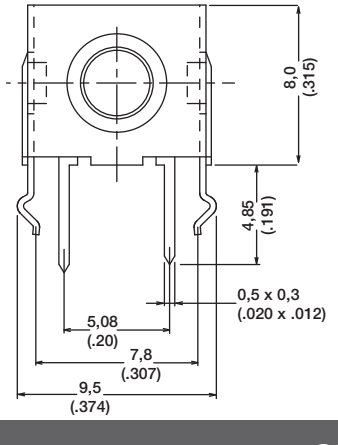

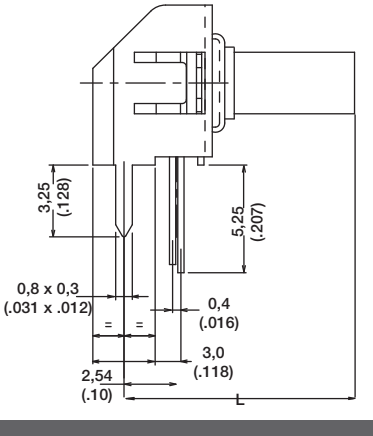

PCB LAYOUT

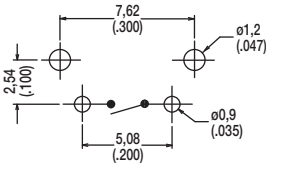

DIMENSION L

Type	L mm	inch
KSA0V	5,8	.228
KSL0V	11,1	.437

OPERATING FORCE

OPTION CODE	OPERATING FORCE
2	1.3 N (130 grams) 100,000 operations
3	1.3 N (130 grams) 1,000,000 operations
4	3.0 N (300 grams) 100,000 operations
5	5.0 N (500 grams) 100,000 operations
9	3.0 N (300 grams) 500,000 operations

First Angle Projection

Dimensions are shown: mm (inches)
Specifications and dimensions subject to change

KSA & KSL Series
Sealed Tact Switch

CONTACT MATERIAL

OPTION CODE	CONTACT MATERIAL
1	Silver contacts
3	Gold contacts

SEALING

OPTION CODE	SEALING
1	Sealing level IP60

BUTTONS

Buttons must be ordered separately and will be supplied in bulk.

BUTTON TYPE	KSA	KSL	KSAV	KSLV
K01	X			
K02	X			
K03	X	X	X	X
K04	X	X	X	X
K05		X		X
K06	X			
K07		X		X
K08		X		X
K09		X		X

K01

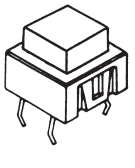

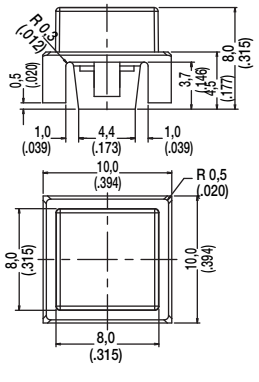

K02

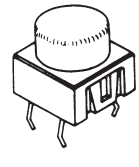

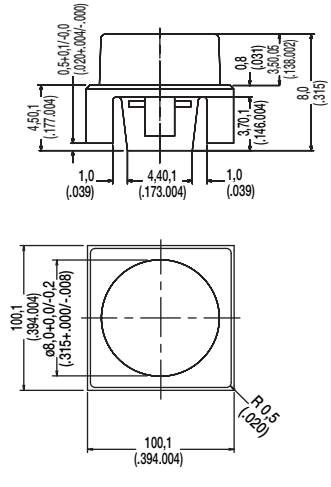

First Angle Projection

Dimensions are shown: mm (inches)
Specifications and dimensions subject to change

K03



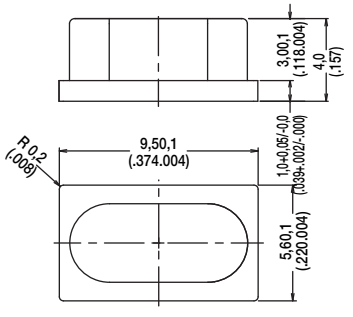

K04

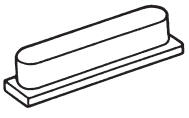

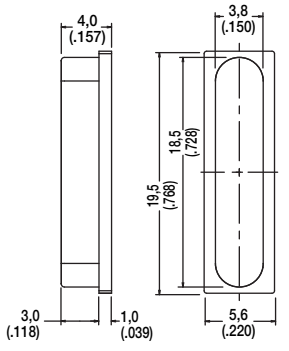

K05

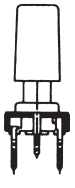

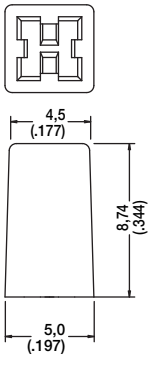

K06

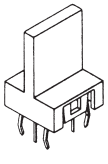

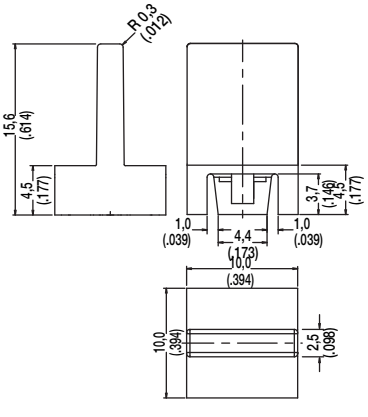

K07

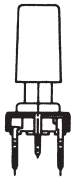

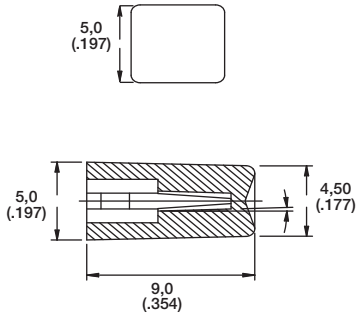

K08

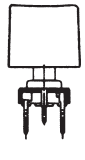

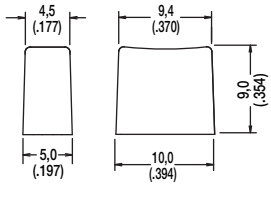

K09



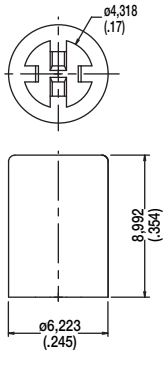

First Angle Projection

Dimensions are shown: mm (inches)
Specifications and dimensions subject to change

Unikeyic Electronics

Global Electronic Components Distributor

Click to view pricing, inventory, delivery, and lifecycle information:

C&K:

7101MPCWZQE 7203SDZQI C115366-8897 E112SD1CBE R10007RR03Q RTAP3EW12M25NP 7107SDW1BE A40305RNCQ E101J1AV3QE2 MA00S3NCQD RS187R05D4DSMTRT2 T103SHABE T108SHZBE RS014R05A1PA 7101J3ZBE2 ET03J1AVBE2 MA04L2NZQD REL BAR F5X12.5 NICKEL PLTD 340102902B 37PFR115 C115366-8935C MA10L1NZQF RTAP41S10W25NS MA04S1NCGF PVA1EEH43.5NV2 PVA2EEH41.7NSNAV2 T101MH9AVGE TP12SH8AVBE Y33R43115FPLFT 7101J1V6BE2 7105J61ZQE22