plug - with screwless terminals, for harsh applications



Product description

Order number	21239
EAN/pcs	4024941212397
Product Group	Quick-Connect TE-Plus plug with Multi-Grip cable gland
Amperage	16A
Poles	5p (3p+N+PE)
Earth 'Clock' Position	6 h
Voltage	200/346 up to 240/415V
Frequency	50 and 60Hz
Protection	IP67
Color code	red RAL 3000
Connection Design	screwless spring-clamp technology as cage clamp
Max. conductor	2,5 mm²

Further Information

Additional technical information	Multi-Grip cable gland with gasket, integrated cable clamp and additional water evacuation openings For cable diameter from 10 up to max. 21 mm

Material

Material of Enclosure	Polyamide
Contact / Contact Carrier	contact carrier made of high temperature resistant material, contacts are brass nickel plated
Weight/pcs	0.214 kg

Bals Elektrotechnik GmbH & Co. KG D-57399 Kirchhundem - Albaum
phone: +49(0)2723/771-0 / fax: +49(0)2723/771-177 / email: info@bals.com

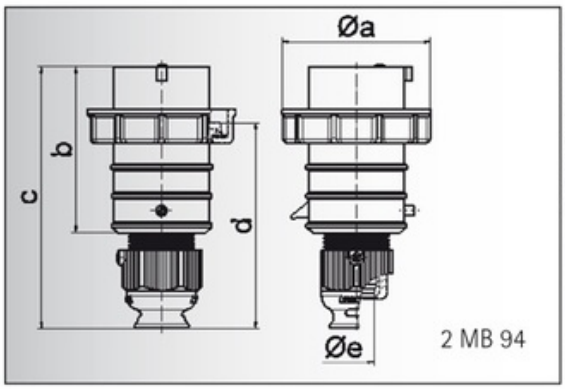

Ampere	16	16	16	32	32	32
Polzahl	3	4	5	3	4	5
a ø	70,0	78,0	86,0	94,0	94,0	101,0
b	95,0	95,0	97,0	118,0	118,0	117,0
c	145,0	145,0	152,0	178,0	178,0	181,0
d	111,0	111,0	119,0	136,0	136,0	138,5
e ø	18,0	18,0	21,0	23,0	23,0	27,0
Leiter mm² min	1	1	1	2,5	2,5	2,5
Leiter mm² max	2,5	2,5	2,5	6	6	6

Bals Elektrotechnik GmbH & Co. KG D-57399 Kirchhundem - Albaum
phone: +49(0)2723/771-0 / fax: +49(0)2723/771-177 / email: info@bals.com

Unikeyic Electronics

Global Electronic Components Distributor

Click to view pricing, inventory, delivery, and lifecycle information:

Bals:

31298 11912 2126 2137 3130 21349 2136 2142 2148 71099 2130 3126 3136 3138 7490 2125