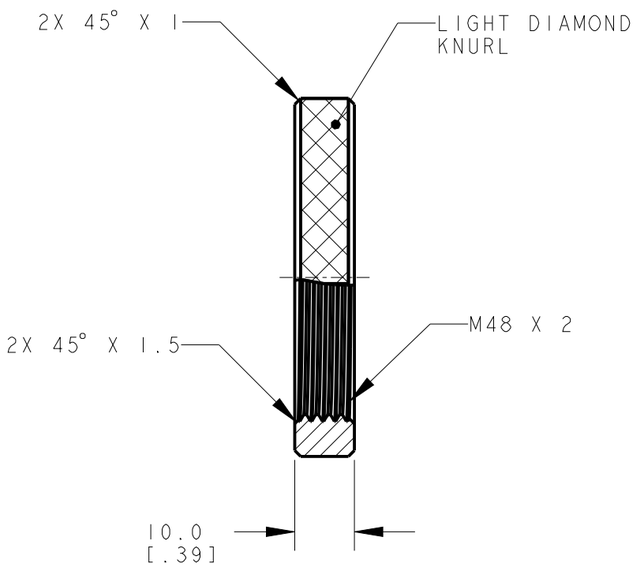

SECTION A-A

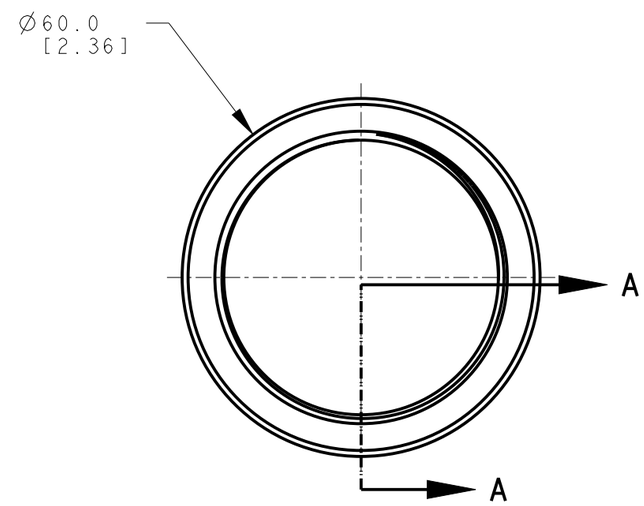

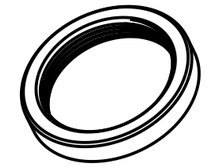

ISOMETRIC VIEW
SCALE 1:2

NOTES:
1. ALL DIMENSIONS ARE MILLIMETERS [INCHES] UNLESS OTHERWISE NOTED.
2. REFER TO "www.bannerengineering.com" FOR ADDITIONAL DATA AND SPECIFICATIONS.

This drawing is the property of BANNER ENGINEERING CORP. Any use or reproduction, in any form, without prior written permission of Banner is prohibited.
© 2015 Banner Engineering Corp.

THIRD ANGLE PROJECTION

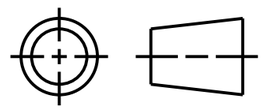

BANNER ENGINEERING CORP.
www.bannerengineering.com

TITLE

M48 X 2 KNURL NUT

SIZE	DRAWING NO.	REV.
B	234880	A
SCALE 1:1	SHEET 1 OF 1	

CREO

Unikeyic Electronics

Global Electronic Components Distributor

Click to view pricing, inventory, delivery, and lifecycle information:

Banner Engineering:

QS18RPWLV S18-2VPRL-2M SL30VB6VQ SMA30PELQDB VS3RN5XLP S18SP6DLQ SM2A312D SM2A912DQD Q20PDXLQ7 SM31EQD Q20PLPQ7 QS18VN6FPQ5 S18UUAQ SM2A312LVAGQD SMA912DQD Q25SP6FF100Q Q45AD9LPQ Q85VR3LP Q25SP6LPQ Q60VR3AFV1000 QS18VN6DQ8 SM2A312F SM31ELQD Q85VR3DL-T9-B QS18VP6DQ8 SM31RL D10UNFP Q20EQ Q20PRQ SM31RQDP