Description

This single inverter buffer and driver is designed for 1.65-V to 5.5-V VCC operation.

The output of the 74LVC1G06xx-7 device is open drain and can be connected to other open-drain outputs to implement active-low wired-OR or active high wired-AND functions. The maximum sink current is 32 mA.

Features

- Supports 5V V_{CC} operation
- Input and Open-Drain Output accept voltages to 5.5V
- Low power consumption, 10μA max I_{CC}
- ±24mA output drive at 3.3V for open-drain devices
- I_{off} supports partial-power-down mode Operation and Back-Drive Protection

DEVICE SUMMARY, PIN AND PACKAGES

PIN DESCRIPTION	MARKING
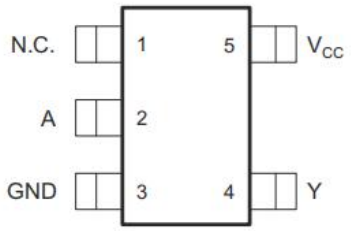 SOT23-5	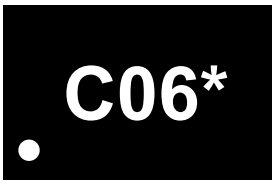

PIN DESCRIPTION	MARKING
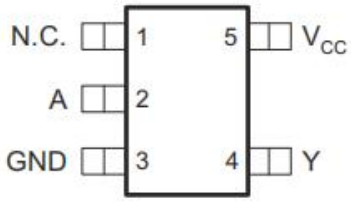 SC70-5	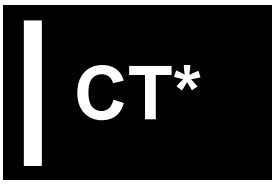

PIN No. DBV/DCK	NAME	I/O	FUNCTION
1	NC		No Connected
2	A	I	Input
3	GND		Ground
4	Y	O	Output
5	VCC		Supply Voltage

ORDER INFORMATION

ORDERING NUMBER	PACKAGE	PACKING OPTION
74LVC1G06W5-7	SOT23-5	3000PCS
74LVC1G06SE-7	SC70-5	3000PCS

Logic Diagram

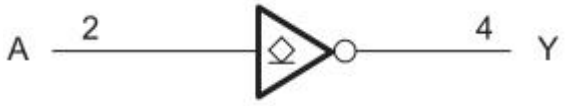

Figure 3.1：74LVC1G06xx-7 Logic Diagram

Function Table

Input	Output
A	Y
1	0
0	Hi-Z

1=High State, 0=Low State

Absolute Maximum Ratings

Symbol	Parameter	MIN	MAX	Unit
V_{CC}	Supply Voltage	-0.5	6.5	V
V_I	Input Voltage Range	-0.5	6.5	V
V_O	Voltage Range(applied to any output in the high-impedance or power-off state)(1)	-0.5	6.5	V
	Voltage Range(applied to any output in the high or low state)	-0.5	VCC + 0.5	V
I_O	Continuous Output Current		±50	mA
T_J	Junction Temperature		125	℃
T_{OP}	Operating Temperature	0	70	℃

Absolute maximum ratings are those values beyond which the device could be permanently damaged,These are stress ratings only,which do not imply functional operation of the device at these or any other conditions beyond those indicated under normal operating conditions.

(1) The input and output negative-voltage ratings may be exceeded if the input and output current ratings are observed.

Electrical Characteristics

DC Specifications

(T_a=25℃, voltages are referenced to GND (ground=0V),All typical values are at VCC=3.3V, unless otherwise specified)

Symbol	Parameter	Test Condition	MIN	TYP	MAX	Unit
V_{IH}	High Level Input Voltage	V_{CC}=1.65V to 1.95V	0.65V_{CC}	--	--	V
		V_{CC}=2.3V to 2.7V	1.7	--	--	V
		V_{CC}=2V to 5.5V	0.7V_{CC}	--	--	V
V_{IL}	Low Level Input Voltage	V_{CC}=1.65V to 1.95V	--	--	0.35V_{CC}	V
		V_{CC}=2.3V to 2.7V	--	--	0.7	V
		V_{CC}=3V to 3.6V	--	--	0.8	V
		V_{CC}=4.5V to 5.5V	--	--	0.3V_{CC}	V
I_{OL}	Low Level Output Current	V_{CC}=1.65V	--	--	4	mA
		V_{CC}=2.3V	--	--	8	mA
		V_{CC}=3V	--	--	16	mA
			--	--	24	mA
		V_{CC}=4.5V	--	--	32	mA

Symbol	Parameter	Test Condition	MIN	TYP	MAX	Unit
V_{OL}	Low Level Output Voltage	V_{CC}=1.65V to 5.5V,I_{OL}=100uA	--	--	0.1	V
		V_{CC}=1.65V,I_{OL}=4mA	--	0.09	--	V
		V_{CC}=2.3V,I_{OL}=8mA	--	0.1	--	V
		V_{CC}=3V,I_{OL}=16mA	--	0.15	--	V
		V_{CC}=3V,I_{OL}=24mA	--	0.25	--	V
		V_{CC}=4.5V,I_{OL}=32mA	--	0.25	--	V
I_I	A Input Leakage Current	V_{CC}=0 to 5.5V,V_I=V_{CC} or GND	--	0	±1	uA
I_{off}	Power Off Leakage Current	V_{CC}=0V,V_I or V_O=5.5V	--	0	±10	uA
I_{CC}	Quiescent Supply Current	V_{CC}=1.65V to 5.5V,V_I=V_{CC} or GND,I_O=0	--	0	10	uA
ΔI_{CC}	Additional Quiescent Supply Current Per Input Pin	V_{CC}=3V to 5.5V,one input at V_{CC} -0.6V,other inputs at V_{CC} or GND	--	--	500	uA

Application Information

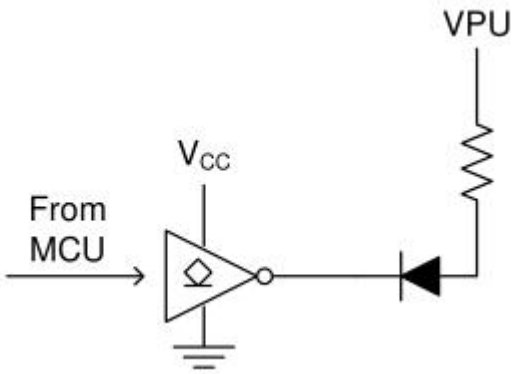

Figure 5.1：Application Schematic

PACKAGE DESCRIPTION

SOT-23-5

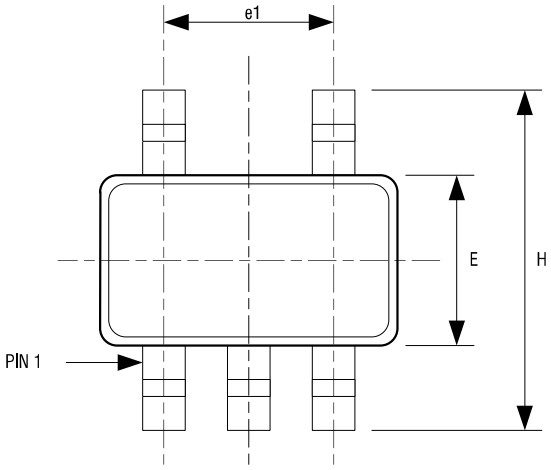

TOP VIEW

5LD SOT-23 PACKAGE OUTLINE DIMENSIONS

Dimension	Min.	Max.
A	1.05	1.35
A1	0.04	.15
B	0.3	0.5
C	0.09	0.2
D	2.8	3.0
H	2.5	3.1
E	1.5	1.7
e	0.95 REF.	
e1	1.90 REF.	
L1	0.2	0.55
L	0.35	0.8
Q	0°	10°

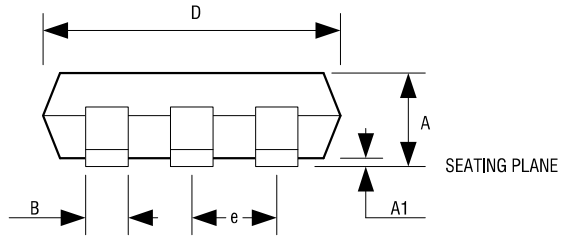

FRONT VIEW

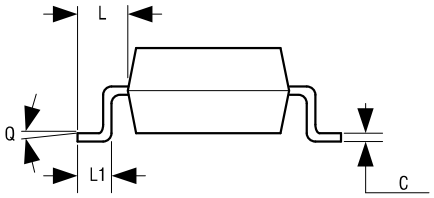

SIDE VIEW

NOTE:

1.DIMENSIONS ARE IN MLLIMETERS
2.DRAWING NOT TO SCALE
3.DIMENSIONS ARE INCLUSIVE OF PLATING
4.DIMENSIONS ARE EXCLUSVE OF MOLD FLASH AND METAL BURR

SC70-5

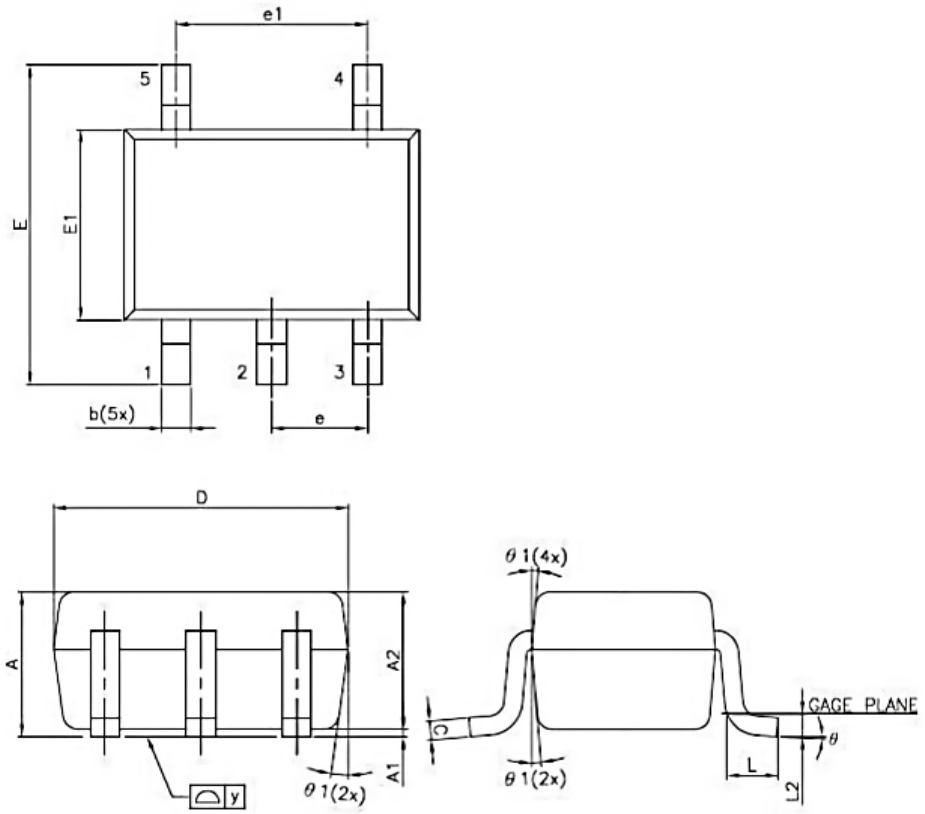

Symbol	Dim in mm		
	MIN	TYP	MAX
A	0.90	1.00	1.10
A1	0.00	0.05	0.10
A2	0.90	0.95	1.00
b	0.15	0.25	0.35
C	0.10	0.12	0.15
D	1.80	2.00	2.20
E	2.15	2.25	2.35
E1	1.15	1.25	1.35
e	0.650TYP.		
el	1.20	1.30	1.40
L	0.25	0.30	0.40
L2	0.15TYP.		
Y	0.00	0.05	0.10
θ	4°	8°	12°