Product data sheet

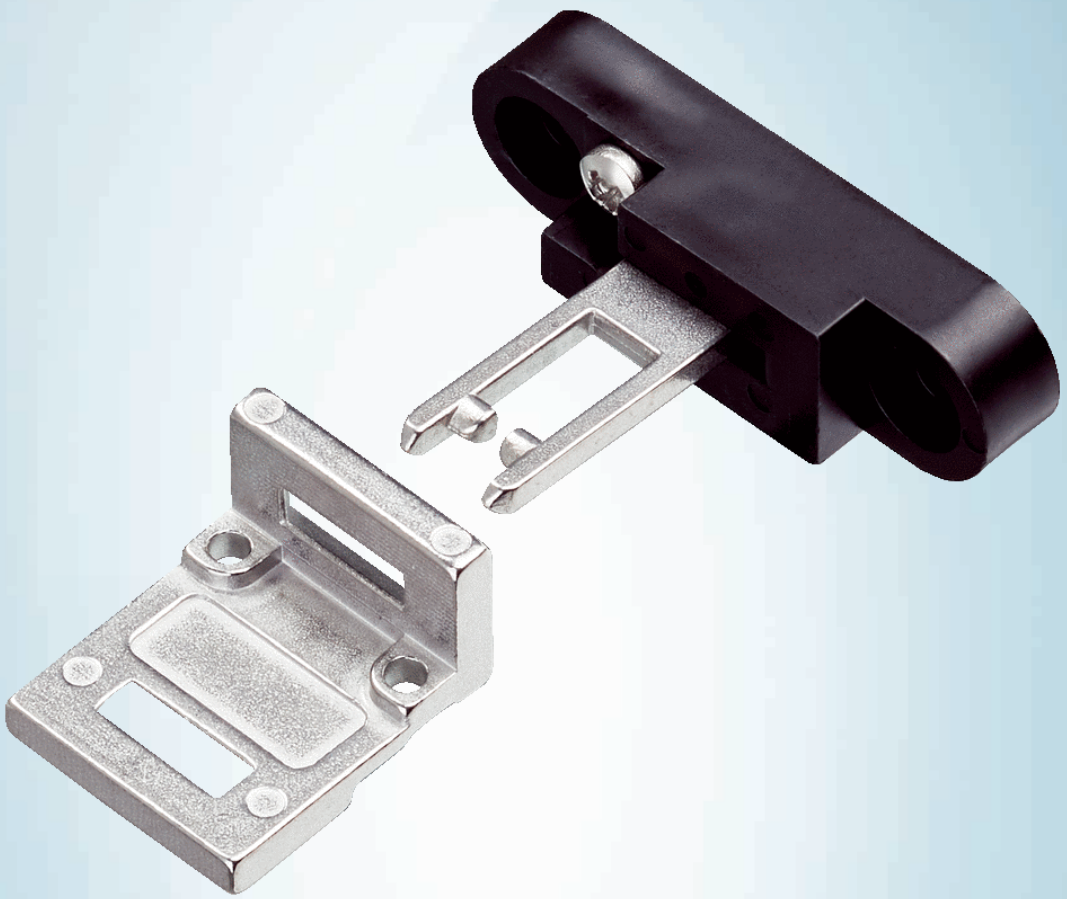

iE12-F1

SICK
Sensor Intelligence.

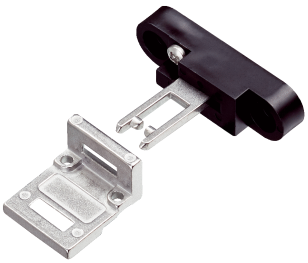

Ordering information

Type	Part no.
iE12-F1	5308842

Other models and accessories ➜ www.sick.com/

Detailed technical data

Technical specifications

Accessory group	Actuators
Design	Rigid
Actuation option	Semiflexible
Min. door radius	≥ 60 mm

Classifications

ECl@ss 5.0	27279290
ECl@ss 5.1.4	27279290
ECl@ss 6.0	27279222
ECl@ss 6.2	27279222
ECl@ss 7.0	27279222
ECl@ss 8.0	27279222
ECl@ss 8.1	27279222
ECl@ss 9.0	27270612
ETIM 5.0	EC002594
ETIM 6.0	EC002594
UNSPSC 16.0901	31251501

Dimensional drawing (Dimensions in mm (inch))

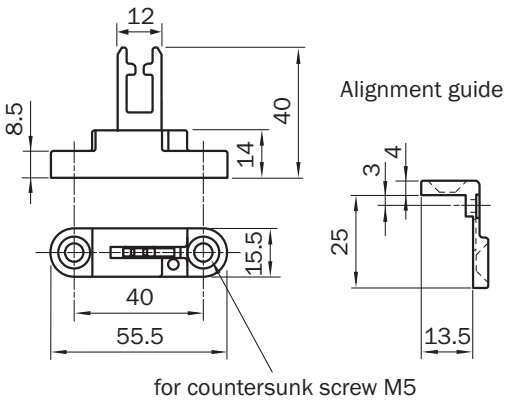

SICK AT A GLANCE

SICK is one of the leading manufacturers of intelligent sensors and sensor solutions for industrial applications. A unique range of products and services creates the perfect basis for controlling processes securely and efficiently, protecting individuals from accidents and preventing damage to the environment.

We have extensive experience in a wide range of industries and understand their processes and requirements. With intelligent sensors, we can deliver exactly what our customers need. In application centers in Europe, Asia and North America, system solutions are tested and optimized in accordance with customer specifications. All this makes us a reliable supplier and development partner.

Comprehensive services complete our offering: SICK LifeTime Services provide support throughout the machine life cycle and ensure safety and productivity.

For us, that is “Sensor Intelligence.”

WORLDWIDE PRESENCE:

Contacts and other locations –www.sick.com