## Table of Contents

For high-performance sealing and strain relief, the perfect mate for a TE Connectivity molded part in a wiring application is a Raychem brand adapter.

TE offers a variety of adapters for applications in many industries, including aerospace, marine, and mass transit.

These adapters are:

- Available in many configurations to match applications
- Easy to install
- Ideal for high-reliability applications
- Kitted for customer convenience.

In this section we present Raychem brand spin-coupling adapters and Tinel-Lock adapters.

The Tinel-Lock adapter utilizes Raychem brand Tinel rings to terminate the overall shield to the adapter. The Tinel ring is a low-profile, high-strength, shape-memory-alloy shield-termination device available in many sizes to accommodate various entry sizes and shield configurations.

Tinel-Lock adapters are ideal for lightweight aerospace applications requiring repeated high-to-low temperature cycles.

**Note:** Users should independently evaluate the suitability of the product for their application. Before ordering, check with TE for most current data.


**Adapter Fundamentals**
Definitions . . . . . 6-2
Types of Adapters . . . . . 6-3, 6-4
Adapter Selection Process . . . . . 6-5

**Adapter Selection**
Adapter Code . . . . . 6-6 to 6-15
Adapter Family . . . . . 6-16
Part Number . . . . . 6-17, 6-18
Material and Finish . . . . . 6-19
Entry Size . . . . . 6-20 to 6-25
Tinel-Lock Ring . . . . . 6-26
CRES-Lock Bands/BND Adapters . . . . . 6-27

**Adapter Products**
Code 18 MIL-C-5015 (MS3100)
Braided Adapters . . . . . 6-28, 6-29
Solid Adapters . . . . . 6-30, 6-31
Spin-Coupling Adapters . . . . . 6-32, 6-33
Tinel-Lock Adapters . . . . . 6-34 to 6-36
Code 21 MIL-C-26482 Series 1
Braided Adapters . . . . . 6-37
Solid Adapters . . . . . 6-38
Spin-Coupling Adapters . . . . . 6-39
Tinel-Lock Adapters . . . . . 6-40, 6-41
CRES-Lock Adapters/BND Adapters . . . . . 6-42, 6-43
Code 32 MIL-C-22992
Braided Adapters . . . . . 6-44, 6-45
Spin-Coupling Adapters . . . . . 6-46
Tinel-Lock Adapters . . . . . 6-47
CRES-Lock Adapters/BND Adapters . . . . . 6-48, 6-49
Code 40 MIL-C-38999 Series III and IV
Braided Adapters . . . . . 6-50, 6-51
Solid Adapters . . . . . 6-52
Spin-Coupling Adapters . . . . . 6-53
Tinel-Lock Adapters . . . . . 6-54, 6-55
CRES-Lock Adapters/BND Adapters . . . . . 6-56, 6-57
Code 41 MIL-C-38999 Series I and II
Braided Adapters . . . . . 6-58, 6-59
Solid Adapters . . . . . 6-60
Spin-Coupling Adapters . . . . . 6-61
Tinel-Lock Adapters . . . . . 6-62, 6-63
CRES-Lock Adapters/BND Adapters . . . . . 6-64, 6-65
Code 54 MIL-C-5015 (MS3400), MIL-C-26482 Series 2, MIL-C-83723 Series I and III, MIL C-81703 Series III
Braided Adapters . . . . . 6-66, 6-67
Solid Adapters . . . . . 6-68
Spin-Coupling Adapters . . . . . 6-69
Tinel-Lock Adapters . . . . . 6-70, 6-71
CRES-Lock Adapters/BND Adapters . . . . . 6-72, 6-73
Code 76 BS 9522 F0017 (Pattern 105)
Spin-Coupling Adapters . . . . . 6-74
Tinel-Lock Adapters . . . . . 6-75, 6-76
Raychem FlexiScreen Backshells . . . . . 6-77, 6-78
HexaShield High-Performance EMC/EMI Adapters . . . . . 6-79 to 6-84
Raychem Spin Lock Variable Angle Backshell . . . . . 6-85, 6-86






Catalog 1654025
Revised 3-13

www.te.com

Dimensions are shown for reference purposes only. Specifications subject to change.

Dimensions are in millimeters unless otherwise specified.

USA: +1 800 522 6752
Asia Pacific: +86 0 400 820 6015
UK: +44 800 267 666

For additional support numbers please visit www.te.com

## Definitions

### Introduction

For high-performance sealing and strain relief, the perfect mate for a TE molded part in a wiring application is a Raychem brand adapter.

TE offers a variety of Raychem brand adapters for applications in many industries, including aerospace, marine, and mass transit.

These adapters are:

- Available in many configurations to match applications
- Easy to install
- Ideal for high-reliability applications
- Kitted for customer convenience.

In this section we present Raychem brand spin-coupling adapters and Tinel-Lock adapters.

The Tinel-Lock adapter utilizes TE Tinel ring to terminate the overall shield to the adapter. The Tinel ring is a low-profile, high-strength, shape-memory-alloy shield-termination device available in many sizes to accommodate various entry sizes and shield configurations.

Tinel-Lock adapters are ideal for lightweight aerospace applications requiring repeated high-to-low temperature cycles.

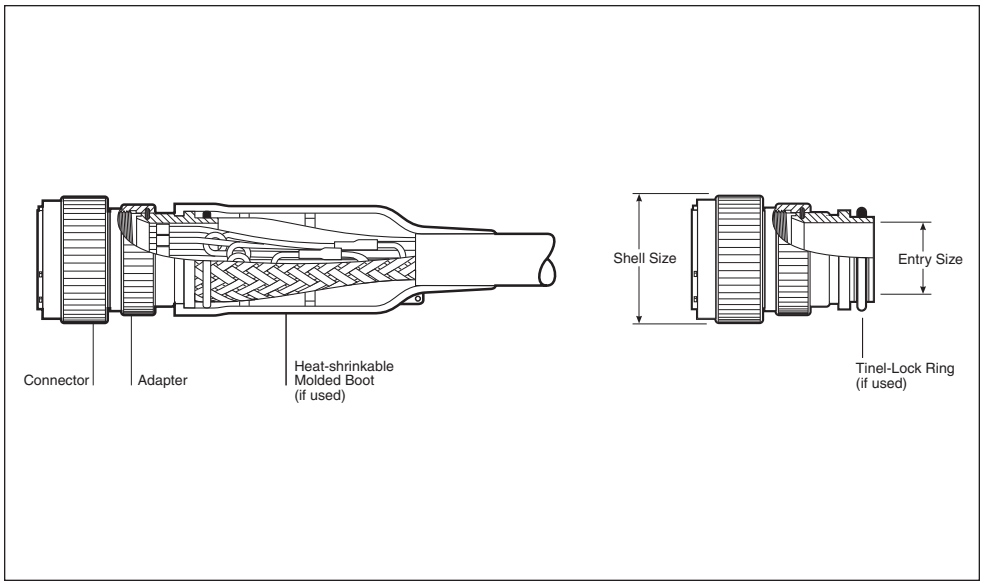


### Adapter Type

TE offers four adapter types: solid (sometimes called “fixed”), spin-coupling, braided, and Tinel-Lock. Each is designed to offer a suitable interface between a connector and a heat-shrinkable molded part.

### Adapter Code

A numerical code is used to identify connectors with similar adapter interfaces. This code is used to determine the adapter family and part number.

### Adapter Part Number

The part number is the sequence of numbers and letters that describes the adapter family (or series), size, material, finish, and modifications. The part numbering system is explained on pages 6-17 and 6-18.

### Adapter Family

TE offers several families (or series) of Raychem adapter products. Each Raychem adapter part number begins with an alphanumeric prefix denoting the Raychem product family.

### Entry Size

Entry size is the diameter of the hole through which the cable enters into the adapter. For example, the 08 entry is 12.7 [0.5]. Entry sizes are specified on braided and Tinel-Lock adapters only.

### Ring Designator

This is a two-letter code that is part of each Tinel-Lock adapter part number. It specifies the size of the Tinel-Lock ring suited to specific types of cable braid.

### Shell Size

This is the size of a connector as specified by the connector manufacturer. It is normally a two-digit number between 08 and 24, although certain connectors are obtainable in either larger or smaller sizes and some use letter codes.

### Order Number

This is a two-digit number that specifies the size of the adapter that will mate to the corresponding shell size of a connector. The order number is frequently the same as the connector shell size, but should be checked by reference to the appropriate product page(s) in this catalog.



Catalog 1654025
Revised 3-13

www.te.com

Dimensions are shown for reference purposes only. Specifications subject to change.

Dimensions are in millimeters unless otherwise specified.

USA: +1 800 522 6752
Asia Pacific: +86 0 400 820 6015
UK: +44 800 267 666

For additional support numbers please visit www.te.com

## Types of Adapters

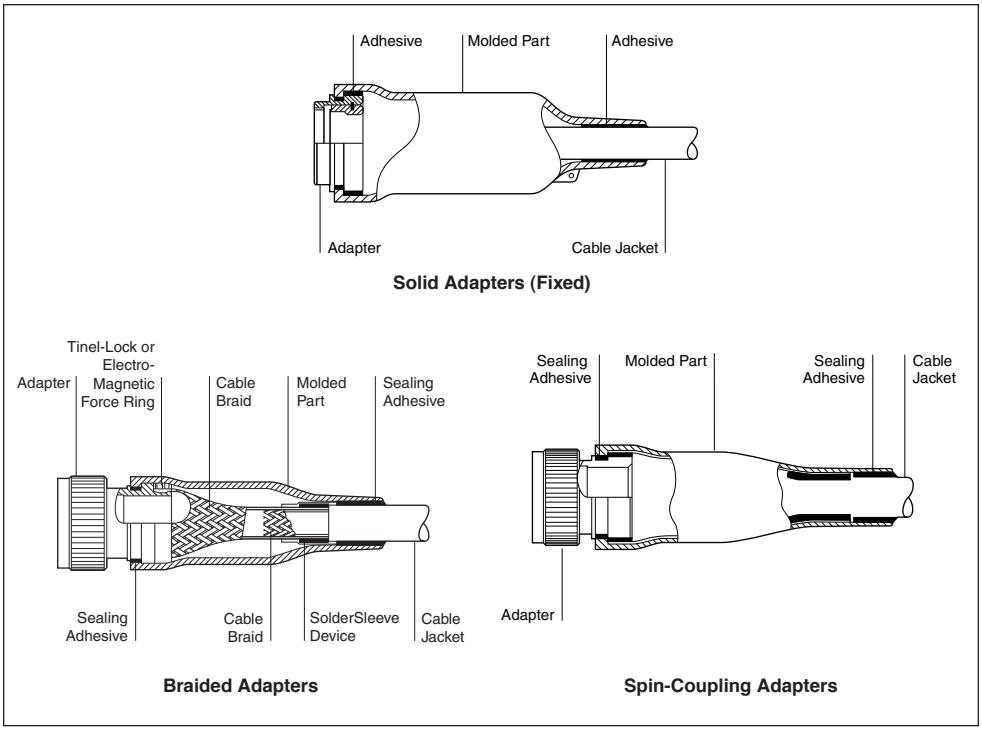


### Adapter Types

TE offers several types of Raychem brand adapters for unscreened and screened termination systems. The choice is largely dependent upon the screening level required and the braid termination method.

The four principal adapter types are:

- Solid (fixed)
- Spin-Coupling
- Braided
- Tinel-Lock

### Solid Adapters (Fixed)

Solid adapters are designed for use where no access is required; for example, when potting is necessary or a lower space profile is needed.

These adapters have a boot groove to accommodate a lipped heat-shrinkable boot. Repair cannot be made without removing the boot.

### Spin-Coupling Adapters

Spin-coupling adapters are two-part components that have a rotatable coupling nut and a grooved body designed to accommodate lipped-type heat-shrinkable boots.

Spin-couplings with an appropriate molded part are used for environmental protection and strain relief of unscreened cable terminations. Cable repairs can be made without damaging the boot.

### Braided Adapters

These are spin-coupling adapters that have a short length of tubular braided shield attached to the rear of the adapter. The braid is constructed from tinned copper wire and has a handling characteristic that enables it to be pulled down onto a wide range of cable diameters. This allows a standard entry size to be used with most cable sizes.

The shield is terminated to the cable braid using a SolderSleeve device, which provides screen continuity through to the connector. Straight, 45°, and 90° configurations are available.





Catalog 1654025
Revised 3-13

www.te.com

Dimensions are shown for reference purposes only. Specifications subject to change.

Dimensions are in millimeters unless otherwise specified.

USA: +1 800 522 6752
Asia Pacific: +86 0 400 820 6015
UK: +44 800 267 666

For additional support numbers please visit www.te.com

## Types of Adapters (Continued)

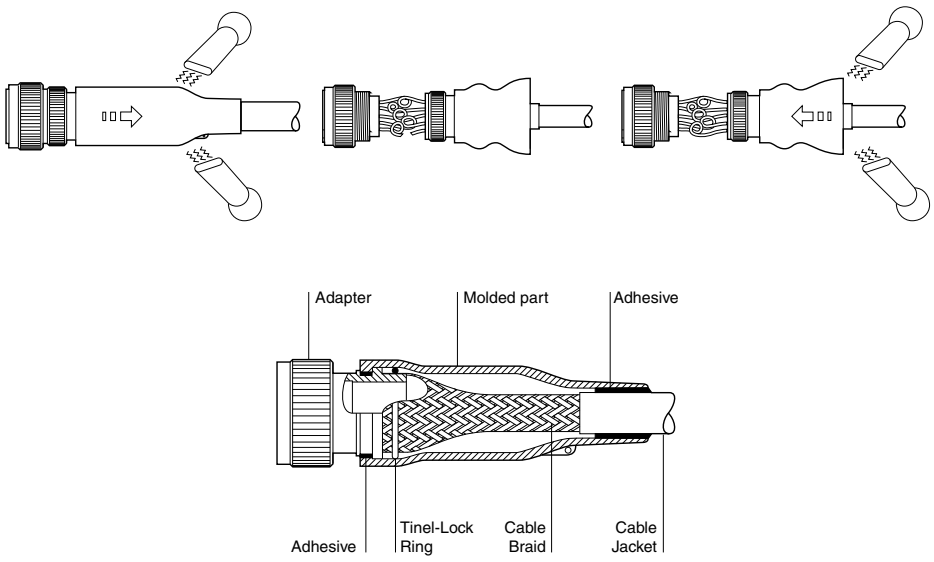


**Tinel-Lock Adapters**

### Tinel-Lock Adapters

This termination system consists of a modified spin-coupling adapter with a Tinel-Lock ring. The Tinel-Lock ring is made from a special shape memory metal that shrinks uniformly when heated (see Application Tooling, section 10).

The Tinel-Lock ring is used to terminate copper cable braid directly onto the rear of the adapter. The adapter entry size and ring designator must be selected to suit the cable diameter and braid type.

The resulting 360° termination withstands severe shock, vibration, temperature cycling, and corrosion. Straight, 45°, and 90° configurations are available.

### Roll-back Repair with Adapters

More than 85 percent of cable repairs are made within 75 mm [3.0] of the connectors—usually because of a broken pin or wire. By reheating the heat-shrinkable boot and unscrewing the adapter coupling nut, the boot can be “rolled back,” providing access to the rear of the connector for repair. This technique is applicable to spin-coupling, shielded, and Tinel-Lock adapters.



Catalog 1654025
Revised 3-13

www.te.com

Dimensions are shown for reference purposes only. Specifications subject to change.

Dimensions are in millimeters unless otherwise specified.

USA: +1 800 522 6752
Asia Pacific: +86 0 400 820 6015
UK: +44 800 267 666

For additional support numbers please visit www.te.com

## Adapter Selection Process

### Step-by-Step Selection Process

Selecting an adapter for your application involves a five-step process:

1. From the connector number, determine:
   - Order number (shell size)
   - Material
   - Plating
2. Decide what adapter type you need for the connector.
3. Determine the connector code for that adapter type. (Use Table A, B, or C on pages 6-6 to 6-15).
4. Determine the adapter family for that connector code. (Use Table D on page 6-16).
5. Build the adapter part number. (See page 6-17).

The chart below will lead you through these steps.

### Adapter Selection Flowchart

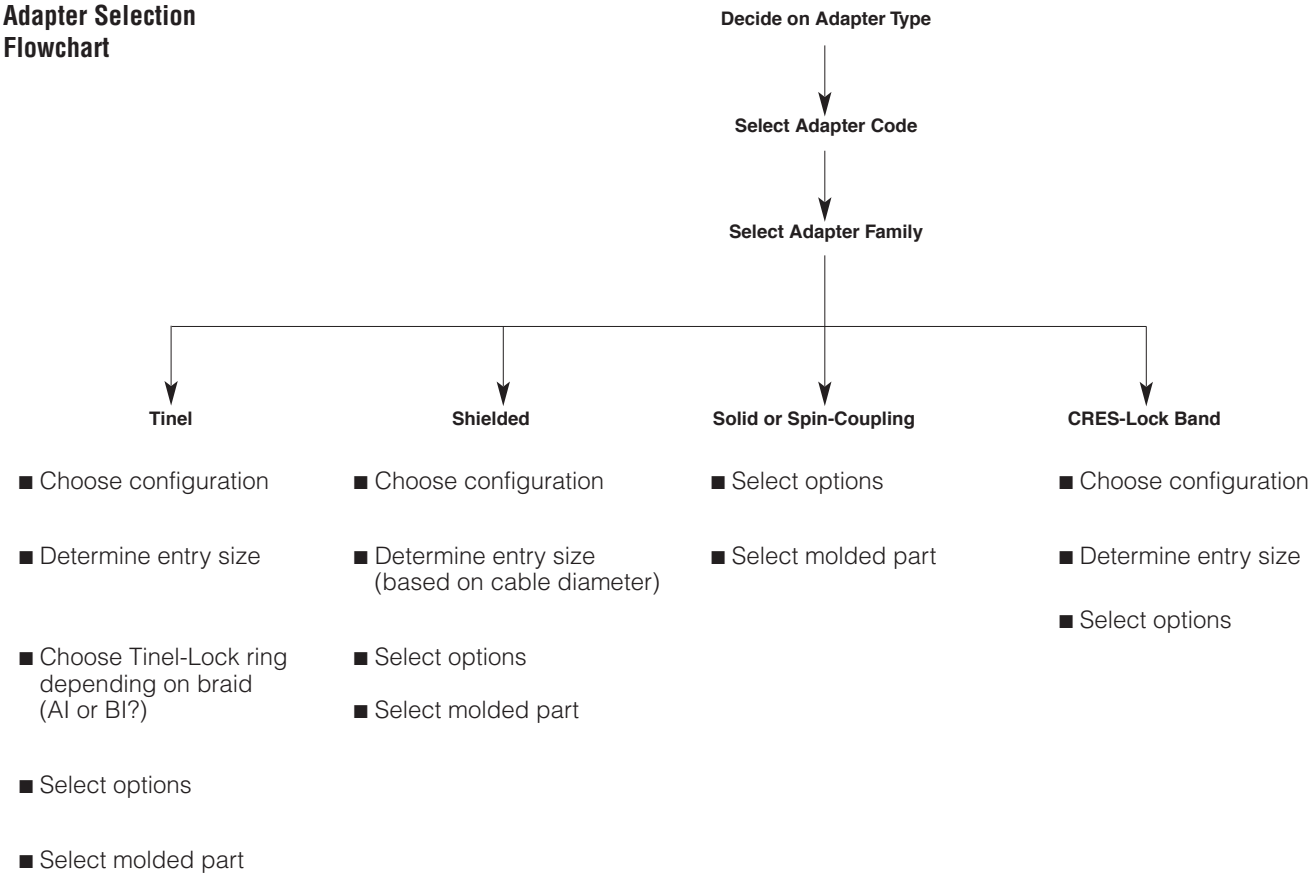






Catalog 1654025
Revised 3-13

www.te.com

Dimensions are shown for reference purposes only. Specifications subject to change.

Dimensions are in millimeters unless otherwise specified.

USA: +1 800 522 6752
Asia Pacific: +86 0 400 820 6015
UK: +44 800 267 666

For additional support numbers please visit www.te.com

## Adapter Code

### Table A. Adapter Code by Military Part Number

#### Selecting the Adapter Code

Tables A, B, and C that follow provide adapter codes for typical connectors.

If you know the military part number for the connector, you can obtain the adapter code from Table A that begins on this page.

If you know the manufacturer's prefix for the connector, you can obtain the adapter code from Table B that begins on page 6-10.

If you know the connector specification, you can obtain the adapter code from Table C on page 6-15

| Military Part No. | Connector Specification | Series/Class | Adapter Code |
|---|---|---|---|
| D38999/20 | MIL-C-38999 | Series III: Class C, F, K, W | 40 |
| D38999/24 | MIL-C-38999 | Series III: Class C, F, K, W | 40 |
| D38999/26 | MIL-C-38999 | Series III: Class C, F, K, W | 40 |
| D38999/40 | MIL-C-38999 | Series IV: Class C, F, W | 40 |
| D38999/42 | MIL-C-38999 | Series IV: Class C, F, W | 40 |
| D38999/44 | MIL-C-38999 | Series IV: Class C, F, W | Contact TE |
| D38999/46 | MIL-C-38999 | Series IV: Class F, W | 40 |
| D38999/47 | MIL-C-38999 | Series IV: Class C, W | 40 |
| M28840/10 | MIL-C-28840 | Class D, DS | 30 |
| M28840/11 | MIL-C-28840 | Class D, DS | 30 |
| M28840/14 | MIL-C-28840 | Class D, DS | 30 |
| M28840/16 | MIL-C-28840 | Class D, DS | 30 |
| M81511/01 | MIL-C-81511 | Series 2: Class A, E, F | 61 |
| M81511/03 | MIL-C-81511 | Series 2: Class A, E, F | 61 |
| M81511/05 | MIL-C-81511 | Series 2: Class A, E, F | 61 |
| M81511/06 | MIL-C-81511 | Series 2: Class A, E, F | 61 |
| M81511/21 | MIL-C-81511 | Series 1: Class A, E, F | 61 |
| M81511/23 | MIL-C-81511 | Series 1: Class A, E, F | 61 |
| M81511/25 | MIL-C-81511 | Series 1: Class A, E, F | 61 |
| M81511/26 | MIL-C-81511 | Series 1: Class A, E, F | 61 |
| M81511/31 | MIL-C-81511 | Series 2: Class C, P, T | 61 |
| M81511/32 | MIL-C-81511 | Series 2: Class C, P, T | 61 |
| M81511/33 | MIL-C-81511 | Series 2: Class C, P, T | 61 |
| M81511/34 | MIL-C-81511 | Series 2: Class C, P, T | 61 |
| M81511/35 | MIL-C-81511 | Series 1: Class C, P, T | 61 |
| M81511/36 | MIL-C-81511 | Series 1: Class C, P, T | 61 |
| M81511/37 | MIL-C-81511 | Series 1: Class C, P, T | 61 |
| M81511/38 | MIL-C-81511 | Series 1: Class C, P, T | 61 |
| M81511/41 | MIL-C-81511 | Series 3: Class A, E, F | 61 |
| M81511/45 | MIL-C-81511 | Series 3: Class A, E, F | 61 |
| M81511/46 | MIL-C-81511 | Series 3: Class A, E, F | 61 |
| M81511/49 | MIL-C-81511 | Series 3: Class A, E, F | 61 |
| M81511/51 | MIL-C-81511 | Series 4: Class A, E, F | 61 |
| M81511/53 | MIL-C-81511 | Series 4: Class A, E, F | 61 |
| M81511/55 | MIL-C-81511 | Series 4: Class A, E, F | 61 |
| M81511/56 | MIL-C-81511 | Series 4: Class A, E, F | 61 |
| M83723/01 | MIL-C-83723 | Series I: Class A, G, R | 54 |
| M83723/02 | MIL-C-83723 | Series I: Class A, G, R | 54 |
| M83723/03 | MIL-C-83723 | Series I: Class A, G, R | 54 |
| M83723/04 | MIL-C-83723 | Series I: Class A, G, R | 54 |
| M83723/05 | MIL-C-83723 | Series I: Class A, G, R | 54 |
| M83723/06 | MIL-C-83723 | Series I: Class A, G, R | 54 |
| M83723/07 | MIL-C-83723 | Series I: Class A, G, R | 54 |
| M83723/08 | MIL-C-83723 | Series I: Class A, G, R | 54 |
| M83723/13 | MIL-C-83723 | Series I: Class A, G, R | 54 |
| M83723/14 | MIL-C-83723 | Series I: Class A, G, R | 54 |
| M83723/17 | MIL-C-83723 | Series II: Class A, G, R | 19 |
| M83723/18 | MIL-C-83723 | Series II: Class A, G, R | 19 |
| M83723/19 | MIL-C-83723 | Series II: Class A, G, R | 19 |
| M83723/20 | MIL-C-83723 | Series II: Class A, G, R | 19 |
| M83723/23 | MIL-C-83723 | Series II: Class A, G, R | 19 |
| M83723/24 | MIL-C-83723 | Series II: Class A, G, R | 19 |
| M83723/27 | MIL-C-83723 | Series II, Class A, G, R | 19 |
| M83723/36 | MIL-C-83723 | Series I: Class A, G, R | 54 |
| M83723/37 | MIL-C-83723 | Series I: Class A, G, R | 54 |
| M83723/38 | MIL-C-83723 | Series I: Class A, G, R | 54 |
| M83723/39 | MIL-C-83723 | Series I: Class A, G, R | 54 |
| M83723/40 | MIL-C-83723 | Series I: Class A, G, R | 54 |
| M83723/41 | MIL-C-83723 | Series I: Class A, G, R | 54 |
| M83723/42 | MIL-C-83723 | Series I: Class G, R | 54 |
| M83723/43 | MIL-C-83723 | Series I: Class G, R | 54 |



Catalog 1654025
Revised 3-13

www.te.com

Dimensions are shown for reference purposes only. Specifications subject to change.

Dimensions are in millimeters unless otherwise specified.

USA: +1 800 522 6752
Asia Pacific: +86 0 400 820 6015
UK: +44 800 267 666

For additional support numbers please visit www.te.com

## Adapter Code (Continued)

### Table A. Adapter Code by Military Part Number
(Continued)

| Military Part No. | Connector Specification | Series/Class | Adapter Code |
|---|---|---|---|
| M83723/48 | MIL-C-83723 | Series I: Class G, R | 54 |
| M83723/49 | MIL-C-83723 | Series I: Class G, R | 54 |
| M83723/52 | MIL-C-83723 | Series II: Class K | 19 |
| M83723/53 | MIL-C-83723 | Series II: Class K | 19 |
| M83723/65 | MIL-C-83723 | Series III: Class H | 54 |
| M83723/66 | MIL-C-83723 | Series III: Class A, G, R | 54 |
| M83723/67 | MIL-C-83723 | Series III: Class A, G, R | 54 |
| M83723/68 | MIL-C-83723 | Series III: Class A, G, R | 54 |
| M83723/69 | MIL-C-83723 | Series III: Class A, G, R | 54 |
| M83723/71 | MIL-C-83723 | Series III: Class A, G, R | 54 |
| M83723/72 | MIL-C-83723 | Series III: Class A, G, R | 54 |
| M83723/73 | MIL-C-83723 | Series III: Class A, G, R | 54 |
| M83723/74 | MIL-C-83723 | Series III: Class A, G, R | 54 |
| M83723/75 | MIL-C-83723 | Series III: Class A, G, R | 54 |
| M83723/76 | MIL-C-83723 | Series III: Class A, G, R | 54 |
| M83723/77 | MIL-C-83723 | Series III: Class G, R | 54 |
| M83723/78 | MIL-C-83723 | Series III: Class G, R | 54 |
| M83723/82 | MIL-C-83723 | Series III: Class A, G, K, R, S | 54 |
| M83723/83 | MIL-C-83723 | Series III: Class A, G, K, R, S | 54 |
| M83723/84 | MIL-C-83723 | Series III: Class A, G, K, R, S | 54 |
| M83723/85 | MIL-C-83723 | Series III: Class A, G, K, R, S | 54 |
| M83723/86 | MIL-C-83723 | Series III: Class A, G, K, R | 54 |
| M83723/87 | MIL-C-83723 | Series III: Class A, G, K, R | 54 |
| M83723/91 | MIL-C-83723 | Series III: Class G, R, W | 54 |
| M83723/92 | MIL-C-83723 | Series III: Class G, R, W | 54 |
| M83723/95 | MIL-C-83723 | Series III: Class A, G, K, R | 54 |
| M83723/96 | MIL-C-83723 | Series III: Class A, G, K, R | 54 |
| M83723/97 | MIL-C-83723 | Series III: Class S | 54 |
| M83723/98 | MIL-C-83723 | Series III: Class S | 54 |
| MS17343 | MIL-C-22992 | Class C, J, R | 32 |
| MS17344 | MIL-C-22992 | Class C, J, R | 32 |
| MS17345 | MIL-C-22992 | Class C, J, R | 32 |
| MS17346 | MIL-C-22992 | Class C, R | 32 |
| MS17347 | MIL-C-22992 | Class C, J, R | 32 |
| MS17348 | MIL-C-22992 | Class C, R | 32 |
| MS24264 | MIL-C-26500 (AL) | Class F, G, R<br>Type B&T aluminum shell | 51 |
| MS24264 | MIL-C-26500 (SST) | Class E<br>Type B&T stainless steel shell | 52 |
| MS24265 | MIL-C-26500 (AL) | Class F, G, R<br>Type B&T aluminum shell | 51 |
| MS24265 | MIL-C-26500 (SST) | Class E<br>Type B&T stainless steel shell | 52 |
| MS24266 | MIL-C-26500 (SST) | Class E<br>Type B&T stainless steel shell | 52 |
| MS24266 | MIL-C-26500 (AL) | Class F, G, R<br>Type B&T aluminum shell | 51 |
| MS27466 | MIL-C-38999 | Series I: Class E, P, T | 41 |
| MS27467 | MIL-C-38999 | Series I: Class E, P, T | 41 |
| MS27468 | MIL-C-38999 | Series I: Class E, P, T | 41 |
| MS27469 | MIL-C-38999 | Series I: Class Y | Contact TE |
| MS27472 | MIL-C-38999 | Series II: Class T | 41 |
| MS27473 | MIL-C-38999 | Series II: Class E, P, T | 41 |
| MS27474 | MIL-C-38999 | Series II: Class T | 41 |
| MS27475 | MIL-C-38999 | Series II: Class Y | Contact TE |
| MS27479 | MIL-C-38999 | Series II: Class T | 41 |
| MS27480 | MIL-C-38999 | Series II: Class E, T | 41 |
| MS27481 | MIL-C-38999 | Series II: Class T | 41 |
| MS27482 | MIL-C-38999 | Series II: Class Y | Contact TE |
| MS27484 | MIL-C-38999 | Series II: Class E, T | 41 |
| MS27497 | MIL-C-38999 | Series II: Class T | 41 |





Catalog 1654025
Revised 3-13

www.te.com

Dimensions are shown for reference purposes only. Specifications subject to change.

Dimensions are in millimeters unless otherwise specified.

USA: +1 800 522 6752
Asia Pacific: +86 0 400 820 6015
UK: +44 800 267 666

For additional support numbers please visit www.te.com

## Adapter Code (Continued)

### Table A. Adapter Code by Military Part Number
(Continued)

| Military Part No. | Connector Specification | Series/Class | Adapter Code |
|---|---|---|---|
| MS27515 | MIL-C-38999 | Series I: Class E | Contact TE |
| MS27613 | MIL-C-26500 (SST) | Class K Type B&T stainless steel shell | 52 |
| MS27614 | MIL-C-26500 (SST) | Class K Type B&T stainless steel shell | 52 |
| MS27615 | MIL-C-26500 (SST) | Class K Type B&T stainless steel shell | 52 |
| MS27652 | MIL-C-38999 | Series I: Class E, T | 41 |
| MS27653 | MIL-C-38999 | Series I: Class E, T | 41 |
| MS27654 | MIL-C-38999 | Series I: Class E, T | Contact TE |
| MS27656 | MIL-C-38999 | Series I: Class E, T | 41 |
| MS27661 | MIL-C-38999 | Series I | 41 |
| MS27665 | MIL-C-38999 | Series I | 41 |
| MS3100 | MIL-C-5015 | Class A, E, F, R less endbell; solder contact | 18 |
| MS3101 | MIL-C-5015 | Class A, E, F, R less endbell; solder contact | 18 |
| MS3106 | MIL-C-5015 | Class A, E, F, R less endbell; solder contact | 18 |
| MS3107 | MIL-C-5015 | Class A, E, F, R less endbell; solder contact | 18 |
| MS3108 | MIL-C-5015 | Solder contact with endbell | 15 |
| MS3110 | MIL-C-26482 | Series 1: Class E, F, J, P | 21 |
| MS3111 | MIL-C-26482 | Series 1: Class E, F, J, P | 21 |
| MS3114 | MIL-C-26482 | Series 1: Class E, F, P | 24[1] |
| MS3116 | MIL-C-26482 | Series 1: Class E, F, J, P | 21 |
| MS3120 | MIL-C-26482 | Series 1: Class E, F, J, P | 21 |
| MS3121 | MIL-C-26482 | Series 1: Class E, F, J, P | 21 |
| MS3124 | MIL-C-26482 | Series 1: Class E, F, P | 24[1] |
| MS3126 | MIL-C-26482 | Series 1: Class E, F, J, P | 21 |
| MS3128 | MIL-C-26482 | Series 1: Class E, F, J, P | 21 |
| MS3130 | MIL-C-81703 | Series 1: Class E, P, J | 71 |
| MS3132 | MIL-C-81703 | Series 1: Class E | 71 |
| MS3134 | MIL-C-81703 | Series 1: Class E, P, J | 71 |
| MS3137 | MIL-C-81703 | Series 1: Class E, P, J | 71 |
| MS3138 | MIL-C-81703 | Series 1: Class E, P, J | 71 |
| MS3140 | MIL-C-81703 | Series 1: Class E, J | 71 |
| MS3144 | MIL-C-81703 | Series 1: Class E, J | 71 |
| MS3147 | MIL-C-81703 | Series 1: Class E, J | 71 |
| MS3148 | MIL-C-81703 | Series 1: Class E, J | 71 |
| MS3400 | MIL-C-5015 | Class D, L, U, W crimp contact | 54 |
| MS3401 | MIL-C-5015 | Class D, L, U, W crimp contact | 54 |
| MS3404 | MIL-C-5015 | Class D, L, U, W crimp contact | 54 |
| MS3406 | MIL-C-5015 | Class D, L, U, W crimp contact | 54 |
| MS3408 | MIL-C-5015 | Class D, L, U, W crimp contact | 54 |
| MS3409 | MIL-C-5015 | Crimp contact | 54 |
| MS3412 | MIL-C-5015 | Class D, L, U, W crimp contact less endbell | 54 |
| MS3424 | MIL-C-81703 | Series 3: Class E, L | 54 |
| MS3445 | MIL-C-81703 | Series 2: Class E | 71 |
| MS3446 | MIL-C-81703 | Series 3: Class E, L | 54 |
| MS3450 | MIL-C-5015 | Class D, L, U, W crimp contact | 54 |
| MS3451 | MIL-C-5015 | Class D, L, U, W crimp contact | 54 |
| MS3454 | MIL-C-5015 | Class D, L, U, W crimp contact | 54 |
| MS3456 | MIL-C-5015 | Class D, L, U, W crimp contact | 54 |
| MS3459 | MIL-C-5015 | Class L, W crimp contact | 54 |
| MS3464 | MIL-C-81703 | Series 3: Class E, L | 54 |
| MS3467 | MIL-C-81703 | Series 3: Class E, L | 54 |
| MS3468 | MIL-C-81703 | Series 3: Class E, L | 54 |
| MS3470 | MIL-C-26482 | Series 2: Class A, L | 54 |
| MS3471 | MIL-C-26482 | Series 2: Class A, L | 54 |
| MS3472 | MIL-C-26482 | Series 2: Class A, L | 54 |
| MS3474 | MIL-C-26482 | Series 2: Class A, L | 54 |
| MS3475 | MIL-C-26482 | Series 2: Class A, L | 54 |
| MS3476 | MIL-C-26482 | Series 2: Class A, L | 54 |
| NAS1599 | MIL-C-81703 | Series 3: | 54 |
| NAS1641 | MIL-C-81703 | Series 3: | 54 |
| NAS1642 | MIL-C-81703 | Series 3: | 54 |

[1]Code 24 connectors have an internal accessory thread.



Catalog 1654025
Revised 3-13

www.te.com

Dimensions are shown for reference purposes only. Specifications subject to change.

Dimensions are in millimeters unless otherwise specified.

USA: +1 800 522 6752
Asia Pacific: +86 0 400 820 6015
UK: +44 800 267 666

For additional support numbers please visit www.te.com

## Adapter Code (Continued)

### Table A. Adapter Code by Military Part Number
(Continued)

| Military Part No. | Connector Specification | Series/Class | Adapter Code |
|---|---|---|---|
| NAS1643 | MIL-C-81703 | Series 3: | 54 |
| NAS1650 | MIL-C-81703 | Series 3: | 54 |
| NAS1651 | MIL-C-81703 | Series 3: | 54 |
| NAS1652 | MIL-C-81703 | Series 3: | 54 |
| NAS1653 | MIL-C-81703 | Series 3: | 54 |
| NAS1692 | MIL-C-81703 | Series 3: | 54 |
| NAS1693 | MIL-C-81703 | Series 3: | 54 |
| NAS1694 | MIL-C-81703 | Series 3: | 54 |
| NAS1699 | MIL-C-81703 | Series 3: | 54 |
| NAS1700 | MIL-C-81703 | Series 3: | 54 |
| NAS1701 | MIL-C-81703 | Series 3: | 54 |
| NAS1702 | MIL-C-81703 | Series 3: | 54 |





Catalog 1654025
Revised 3-13

www.te.com

Dimensions are shown for reference purposes only. Specifications subject to change.

Dimensions are in millimeters unless otherwise specified.

USA: +1 800 522 6752
Asia Pacific: +86 0 400 820 6015
UK: +44 800 267 666

For additional support numbers please visit www.te.com

## Adapter Code (Continued)

### Table B. Adapter Code by Manufacturer's Prefix

| Manufacturer's Prefix | Manufacturer[6] | Connector Specification | Series/Class | Adapter Code |
|---|---|---|---|---|
| 10-214 | Bendix | MIL-C-5015 | MS3100 Class A, E, R | 18 |
| 10-475 | Bendix | 40M38277 | — | 41 |
| 10-720 | Bendix | MIL-C-5015 | MS3100 Class A, E, R | 18 |
| 118 | Amphenol | MIL-C-26482 | Series 2 | 54 |
| 149 | Deutsch | MIL-C-81703 | Series 1 | 71 |
| 162GB | Amphenol | MIL-C-26482 | Series 1 | 76, 77[4] |
| 164GB | Amphenol | BS9522 F0023 | — | Contact TE |
| 165 | Amphenol | None | — | Contact TE |
| 172 | Amphenol | MIL-C-5015 | — | Contact TE |
| 179 | Amphenol | MIL-C-5015 | — | Contact TE |
| 182 | Amphenol | None | — | Contact TE |
| 246 | Amphenol | MIL-C-5015 | MS3100 Class E, F, R | 18 |
| 251 | Cannon | MIL-C-26482 | Series 1 | 21 |
| 2PPN | Plessey | MIL-C-26482 | Series 1 | 21 |
| 2PPN-07 | Plessey | MIL-C-26482 | Series 1 | 24[3] |
| 2PSN | Plessey | BS9522 F0017 | Patt 105 | 76, 77[4] |
| 2PSN-07 | Plessey | MIL-C-26482 | Series 1 | 24[3] |
| 348 | Amphenol | MIL-C-81511 | Series 1 and 2 | 61 |
| 381 | Deutsch | 40M39569 | — | 54 |
| 418 | Amphenol | MIL-C-38999 | Series I and II | 41 |
| 45/PT | Socapex | MIL-C-26482 | Series 1 | 21 |
| 450 | Deutsch | MIL-C-26482 | Series 1 | 21 |
| 451 | Socapex | PRL 54125 | — | 21 or 24[3] |
| 460 | Deutsch | MIL-C-26482 | Series 1 | 21 |
| 48 | Amphenol | MIL-C-26500 | Alum Class F, G, R | 51 |
| 486 | Amphenol | MIL-C-26482 | Series 2 | 54 |
| 518 | Amphenol | MIL-C-83723 | Series III | 54 |
| 5MS | FKI[2] | Def. Stan. 59-35 | Patt 121A | 75 |
| 602 | Amphenol | Def. Stan. 59-56 | Patt 602 | 54 |
| 602GB | Amphenol | Def. Stan. 59-56 | Patt 602 | 54 |
| 62AB-14 | Amphenol | MIL-C-26482 | Series 1 | Contact TE |
| 62GB | Amphenol | Def. Stan. 59-35 | Patt 105 | 76, 77[4] |
| 650 | Schaltbau | VG 95329 | — | 61 |
| 652 | Amphenol | LN 29504 | — | 54 |
| 652 | UMD | PRL 54125 | — | 21 or 24[3] |
| 674 | Schaltbau | VG 95328 | — | Contact TE |
| 675 | Schaltbau | VG 95328 | — | Contact TE |
| 679 | Schaltbau | VG 95329 | — | 61 |
| 69 | Amphenol | MIL-C-5015 | MS3100 Class E, F, R | 18 |
| 71 | Bendix | MIL-C-5015 | MS3100 Class A, E, R | 18 |
| 711 | Amphenol | BS9522 F0042 | — | 54 |
| 801 | Amphenol | None | — | 54 |
| 837 | Deutsch | MIL-C-83723 | Series III | 54 |
| 83723 | Souriau | MIL-C-83723 | Series III | 54 |
| 83730 | Deutsch | MIL-C-83723 | Series III | 54 |
| 845 | Souriau | NFL 54120 | — | Contact TE |
| 847 | Souriau | NFL 54120 | — | Contact TE |
| 850 | Souriau | MIL-C-26482 | Series 1 | 21 |
| 851 | Souriau | MIL-C-26482 | Series 1 | 21 |
| 8520 | Souriau | MIL-C-26482 | Series 2 | 54 |
| 8525 | Souriau | NAS 1599 | — | 54 |
| 8526 | Souriau | PAN 6432-1 | — | 54 |
| 853 | Souriau | MIL-C-83723 | Series III | 54 |
| 857 | Souriau | LN 29728 | — | 54 |
| 89 | Souriau | NFL 54140 | — | 54 |

[2]FKI was previously Thorn.
[3]Code 24 connectors have an internal accessory thread.
[4]Code 77 braided version.



Catalog 1654025
Revised 3-13

www.te.com

Dimensions are shown for reference purposes only. Specifications subject to change.

Dimensions are in millimeters unless otherwise specified.

USA: +1 800 522 6752
Asia Pacific: +86 0 400 820 6015
UK: +44 800 267 666

For additional support numbers please visit www.te.com

## Adapter Code (Continued)

### Table B. Adapter Code by Manufacturer's Prefix
(Continued)

| Manufacturer's Prefix | Manufacturer[6] | Connector Specification | Series/Class | Adapter Code |
|---|---|---|---|---|
| 891 | Souriau | MIL-C-5015 | Class K | Contact TE |
| 892 | Souriau | MIL-C-5015 | Class K | Contact TE |
| 8LT | Souriau | MIL-C-38999 | Series I | 41 |
| 8ST | Souriau | VG 96912 | Series 1 | 47 |
| 8T | Souriau | MIL-C-38999 | Series II | 41 |
| 9-815 | Deutsch | MIL-C-81511 | Series 3 and 4 | 61 |
| 91-483 | Bendix | MIL-C-26482 | Series 2 | 54 |
| 944 | Matrix | MIL-C-5015 | MS3400 Class L, U, W | 54 |
| 951 | Deutsch | LN 29500 | — | Contact TE |
| 97 | Amphenol | MIL-C-5015 | MS3100 Class A | 18 |
| 981 | Matrix | MIL-C-5015 | MS3400 | 54 |
| A815 | Deutsch | MIL-C-81511 | Series 3 | 61 |
| AA70 | Deutsch | Not known | — | 71 |
| AB05 | AB Elec | Def. Stan. 59-35 | Patt 105 | 76, 77[4] |
| AB06 | AB Elec | Def. Stan. 59-35 | Patt 105 | 76, 77[4] |
| ABB | AB Elec | BS9522 F0032 | — | 78 |
| ABJ | AB Elec | MIL-C-38999 | Series I and II | 41 |
| ADS | Deutsch | MIL-C-81703 | — | 71 |
| AFD | Deutsch | MIL-C-83723 | Series I | 54 |
| AFD5 | Deutsch | MIL-C-26482 | Series 2 | 54 |
| B815 | Deutsch | MIL-C-81511 | Series 4 | 61 |
| BE | Pyle | MIL-C-83723 | Series III | 54 |
| BG | Bendix | MIL-C-26482 | Series I | 21 |
| BL | G&H Tech | MIL-C-38999 | Series IV | 40 |
| BL | TRW | MIL-C-38999 | Series IV | 40 |
| BT | Burndy | MIL-C-26482 | Series 1 | 21 |
| BT | Pyle | MIL-C-83723 | Series III | 54 |
| BTK | Deutsch | MIL-C-26482 | Series 1 | 21 |
| BY1 | Pyle | MIL-C-83723 | Series III | 54 |
| C48 | TRW | MIL-C-26500 | Aluminum | 51 |
| CA (Bayonet) | Cannon | VG 95234 | — | 58 |
| CA3101 | Cannon | MIL-C-5015 | MS3100 class E, F, R | 18 |
| CA3101 | Cannon | MIL-C-5015 | MS3100 Class A | 18 |
| CA3101KE | Cannon | MIL-C-5015 | Class K | Contact TE |
| CA3106 | Cannon | MS3106A | — | 58 |
| CIR | VEAM | VG 95234 | — | 64***, 66**, 78* |
| CN0930 | TRW | MIL-C-83723 | Series III | 54 |
| CT | Burndy | MIL-C-38999 | Series II | 41 |
| CT | Plessey | MIL-C-38999 | Series II | 41 |
| CV-R | Cannon | MIL-C-83723 | Series II | 19 |
| CV34 | Cannon | MIL-C-5015 | MS3400 Class L, U, W | 54 |
| CVA | Cannon | MIL-C-83723 | Series II | 19 |
| CWL | Cannon | None | — | 31 |
| CWLD | Cannon | MIL-C-22992 | Class C, J, R | 32 |
| D817 | Deutsch | MIL-C-81703 | Series 3 | 54 |
| DA | Deutsch | None | — | 71 |
| DBAD | Deutsch | MIL-C-81703 | — | Contact TE |
| DBAS | Deutsch | MIL-C-81703 | Series 3 | 54 |
| DD | Deutsch | MIL-C-81703 | Series 2 | 71 |
| DFE | Deutsch | MIL-C-26482 | Series 2 | 54 |
| DKM | Deutsch | VG 95328 | — | Contact TE |
| DL | Deutsch | MIL-C-83723 | Series III | 54 |
| DM | Deutsch | MIL-C-81703 | Series 1 | 71 |
| DPX | Cannon | | — | Contact TE |
| DS | Deutsch | None | — | 71 |
| DTS | Deutsch | MIL-C-38999 | Series III | 40 |

* AB connectors only
** VEAM standard
***VEAM panel mount
[4]Code 77 braided version.





Catalog 1654025
Revised 3-13

www.te.com

Dimensions are shown for reference purposes only. Specifications subject to change.

Dimensions are in millimeters unless otherwise specified.

USA: +1 800 522 6752
Asia Pacific: +86 0 400 820 6015
UK: +44 800 267 666

For additional support numbers please visit www.te.com

## Adapter Code (Continued)

### Table B. Adapter Code by Manufacturer's Prefix
(Continued)

| Manufacturer's Prefix | Manufacturer[6] | Connector Specification | Series/Class | Adapter Code |
|---|---|---|---|---|
| EA | Pyle | None | — | 54 |
| EB | Pyle | NAS 1599 | — | 54 |
| EEG | Pyle | MIL-C-83723 | Series I | 54 |
| ES | Pyle | None | — | 54 |
| ESC004 | Various | MIL-C-5015 | Class K | Contact TE |
| ET | Pyle | NAS 1599 | — | 54 |
| FC | Flight | MIL-C-5015 | Rev E only | Contact TE |
| FDBA | Deutsch | LN 29504 | — | 54 |
| FF | Flight | MIL-C-5015 | MS3400 Class D, L, U, W | 54 |
| FH | Flight | MIL-C-83723 | Series III | 54 |
| FPK | Pyle | MIL-C-26500 | Class K | 52 |
| FP5K | Pyle | MIL-C-26500 | Class K | Contact TE |
| FYL | Pyle | MIL-C-26500 | Class K | 52 |
| G | Burndy | None | — | 21 |
| GC-E | General | MIL-C-26482 | Series 1 | 21 |
| GTA | Hughes | MIL-C-28840 | — | 30 |
| GTC06 | Amphenol | — | — | 64 |
| HAN | Deutsch | MIL-C-5015 | MS3100 Class E, KE | Contact TE |
| HD | SAE | MIL-C-28840 | — | 30 |
| HTMAS | Cannon | MIL-C-5015 | Class K | Contact TE |
| HTMF | Cannon | MIL-C-83723 | Series III: Class K | 54 |
| HTMS | AB Elec | MVEE 695 | — | 75 |
| JT | Amphenol | MIL-C-38999 | Series II | 41 |
| JT | Bendix/FKI | MIL-C-38999 | Series II | 41 |
| JT | Socapex | MIL-C-38999 | Series II | 41 |
| JT-R | FKI[2] | PAN 6433-1 | — | 41 |
| JT-R | Teldix | PAN 6433-1 | — | 41 |
| KFS | Cannon | MIL-C-28840 | — | 30 |
| KJ | Cannon | MIL-C-38999 | Series II | 41 |
| KJA | Cannon | MIL-C-38999 | Series III | 40 |
| KJJ | Cannon | MIL-C-38999 | Series II | Contact TE |
| KJJL | Cannon | MIL-C-38999 | Series I | Contact TE |
| KJL | Cannon | MIL-C-38999 | Series I | 41 |
| KPSE | Cannon | MIL-C-26482 | Series 1 | 21 |
| KPT | Cannon | MIL-C-26482 | Series 1 | 21 |
| KV-R | Cannon | NAS 1599 | — | 54 |
| L | Burndy | MIL-C-26482 | Series 1 | 21 |
| LJT | Bendix | MIL-C-38999 | Series I | 41 |
| LJT | Socapex | MIL-C-38999 | Series I | 41 |
| LL3 | Deutsch | MIL-C-81511 | — | 61 |
| LL5/6 | Deutsch | BS9540 F0001 | Patt 602 | Contact TE |
| LMB | Litton-Veam | Def. Stan. 59-35 | Patt 121A | 75 |
| LPT | Deutsch | MIL-C-26482 | Series 1 | 21 |
| LS | Pyle | None | — | 54 |
| LTT | FKI[2] | BS9522 F0029 | Patt 616 | 41 |
| M-T | Burndy | MIL-C-26482 | Series 1 | 21 |
| M723 | Matrix | MIL-C-83723 | Series II | 19 |
| MB1 | Matrix | MIL-C-26482 | Series 2 | 54 |
| MB3 | Matrix | MIL-C-83723 | Series III | 54 |
| MB9 | Matrix | MIL-C-38999 | Series I and II | 41 |
| MD | Matrix | MIL-C-26482 | Series 2 | 54 |
| MDR | Deutsch | None | — | 71 |
| MF | Cannon | MIL-C-83723 | Series III | 54 |
| MK12 | Plessey | Def. Stan. 59-35 | Patt 603 | 76, 77[4] |
| MK18 | Plessey | Def. Stan. 59-35 | Patt 608 | 79[5] |
| MK38 | Plessey | MIL-C-38999 | Series I | 41 |

[2]FKI was previously Thorn.
[4]Code 77 braided version.
[5]Free connectors only.



Catalog 1654025
Revised 3-13

www.te.com

Dimensions are shown for reference purposes only. Specifications subject to change.

Dimensions are in millimeters unless otherwise specified.

USA: +1 800 522 6752
Asia Pacific: +86 0 400 820 6015
UK: +44 800 267 666

For additional support numbers please visit www.te.com

## Adapter Code (Continued)

### Table B. Adapter Code by Manufacturer's Prefix
(Continued)

| Manufacturer's Prefix | Manufacturer[6] | Connector Specification | Series/Class | Adapter Code |
|---|---|---|---|---|
| MK25 | Plessey | MIL-C-38999 | Series II | 41 |
| MK7 | Plessey | DEF 5325-2 | Patt 104 | Contact TE |
| MK8 | Plessey | Def. Stan. 59-35 | Patt 105 | 76, 77[4] |
| ML94 | Matrix | MIL-C-38999 | Series IV | 40 |
| MQ3 | Matrix | MIL-C-83723 | Series III | 54 |
| MT3 | Matrix | MIL-C-83723 | Series III | 54 |
| MT93 | Matrix | MIL-C-38999 | Series III | 40 |
| P5 | Plessey | NFL 54 125 | — | 76 or 24[3], 77[4] |
| PAT104D | AB Elec | Def. Stan. 59-35 | Patt 104 | Contact TE |
| PT | Socapex | MIL-C-26482 | Series 1 | 76, 77[4] |
| PT | Teldix | MIL-C-26482 | Series 1 | 76, 77[4] |
| PT-CE | Bendix | None | — | 22 |
| PT-G | Teldix | VG 95328 | — | Contact TE |
| PT-SE | Socapex | MIL-C-26482 | Series 1 | 76, 77[4] |
| PT-SE | Teldix | MIL-C-26482 | Series 1 | 76, 77[4] |
| PT07 | Bendix | MIL-C-26482 | Series 1 | 24[3] |
| PT07SE | FKI[2] | MIL-C-26482 | Series 1 | 24[3] |
| PT33 | FKI[2] | BS9522 F0017 | Patt 105 | 76, 77[4] |
| PT33SE | FKI[2] | BS9522 N0001 | Patt 603 | 76, 77[4] |
| PT44 | FKI[2] | BS9522 F0017 | Patt 105 | 76, 77[4] |
| PT44SE | FKI[2] | BS9522 N0001 | Patt 603 | 76, 77[4] |
| PT55 | FKI[2] | BS9522 F0017 | Patt 105 | 76, 77[4] |
| PT55SE | FKI[2] | BS9522 N0001 | Patt 603 | 76, 77[4] |
| PT77 | FKI[2] | BS9522 F0017 | Patt 105 | 76, 77[4] |
| PT77SE | FKI[2] | BS9522 N0001 | Patt 603 | 76, 77[4] |
| PTG55 | FKI[2] | BS9522 F0017 | Patt 105 | 76, 77[4] |
| PTG55SE | FKI[2] | BS9522 N0001 | Patt 603 | 76, 77[4] |
| PTS-DR | Bendix | MIL-C-26482 | Series 2 | 54 |
| PV7 | Cannon | MIL-C-26482 | Series 2 | 54 |
| PVJ | Cannon | MIL-C-26482 | Series 2 | 54 |
| PVW | Cannon | — | — | 54 |
| PVX | Cannon | Def. Stan. 59-56 | Patt 602 | 54 |
| QDP | Bendix | None | — | 32 |
| QRP | AB Elec | — | — | 78 |
| QWL | Bendix | None | — | 31 |
| QWLD | Bendix | MIL-C-22992 | Class C, J, R | 32 |
| RD1 | Raychem | MIS-20065 | — | 54 |
| RR | Deutsch | Def. Stan. 59-56 | Patt 602 | 54 |
| RR20 | Deutsch | PAN 6432-2 | — | 54 |
| RR50 | Deutsch | PAN 6432-1 | — | 54 |
| RR70 | Deutsch | PAN 6432-2 | — | 54 |
| RSM | Deutsch | None | — | 71 |
| RTK | Deutsch | None | — | 71 |
| SA | SAE | MIL-C-5015 | MS3400 | 54 |
| SB | Bendix | MIL-C-5015 | Class E | 18 |
| SB-104 | AB Elec | Def. Stan. 59-35 | Patt 104 | Contact TE |
| SB-M4 | AB Elec | Def. Stan. 59-35 | Patt 104 | Contact TE |
| SB-MS | AB | BS9522 F0030 | — | 75 |
| SC | Bendix | MIL-C-5015 | MS3100 Class A | 18 |
| SCB | SICEM | VG 95234 | — | Contact TE |
| SF | Bendix | MIL-C-5015 | MS3100 Class E | 18 |
| SG | Bendix | MIL-C-5015 | MS3100 Class E | 18 |
| SJT | Various | PAN 6433-2 | — | 47 |
| SJT07 | Various | PAN 6433-2 | — | Contact TE |
| SLPT | Deutsch | MIL-C-26482 | Series 1 | 76, 77[4] |

[2]FKI was previously Thorn.
[3]Code 24 connectors have an internal accessory thread.
[4]Code 77 braided version.





Catalog 1654025
Revised 3-13

www.te.com

Dimensions are shown for reference purposes only. Specifications subject to change.

Dimensions are in millimeters unless otherwise specified.

USA: +1 800 522 6752
Asia Pacific: +86 0 400 820 6015
UK: +44 800 267 666

For additional support numbers please visit www.te.com

## Adapter Code (Continued)

### Table B. Adapter Code by Manufacturer's Prefix
(Continued)

| Manufacturer's Prefix | Manufacturer[6] | Connector Specification | Series/Class | Adapter Code |
|---|---|---|---|---|
| SM | Bendix | MIL-C-5015 | MS3100 Class A, E, R | 18 |
| SPT | Bendix | MIL-C-26482 | Series 1 | 76, 77[4] |
| SPT | Socapex | MIL-C-26482 | Series 1 | 76, 77[4] |
| SPT07 | Various | MIL-C-26482 | Series 1 | 24[3] |
| STK | Deutsch | None | — | 71 |
| STT | FKI[2] | BS9522 F0012 | Patt 615 | 47 |
| STT07 | FKI[2] | BS9522 F0012 | Patt 615 | Contact TE |
| T3[1] | Pyle | MIL-C-38999 | Series III | 40 |
| TRIM TRIO | Burndy | None | — | Contact TE |
| TT | FKI[2] | BS9522 N0003 | Patt 614 | 41 |
| TV | FKI[2]/Bendix | MIL-C-38999 | Series III | 40 |
| TV-O-R | Bendix | MIL-C-38999 | Series III and IV | 40 |
| TVP | FKI[2]/Bendix | MIL-C-38999 | Series III | 40 |
| TVPS | FKI[2]/Bendix | MIL-C-38999 | Series III | Contact TE |
| TVS | FKI[2]/Bendix | MIL-C-38999 | Series III | Contact TE |
| Tri-Start | Bendix | MIL-C-38999 | Series III and IV | 40 |
| VPT | VEAM | MIL-C-26482 | Series 1 | 21 |
| VTT | FKI[2] | MIL-C-38999 | Series III | 40 |
| ZZY/ZZW | Pyle | MIL-C-26500 | Class R, G (AL) | 51 |
| ZZY/ZZW | Pyle | MIL-C-26500 | Class E (SST) | 52 |

[1]May be a number or letter depending upon connector style.
[2]FKI was previously Thorn.
[3]Code 24 connectors have an internal accessory thread.
[4]Code 77 braided version.
[5]Free connectors only.
[6]Some of the connector manufacturers names may have changed and may not exist. They are listed here to assist users who know them as listed names.



Catalog 1654025
Revised 3-13

www.te.com

Dimensions are shown for reference purposes only. Specifications subject to change.

Dimensions are in millimeters unless otherwise specified.

USA: +1 800 522 6752
Asia Pacific: +86 0 400 820 6015
UK: +44 800 267 666

For additional support numbers please visit www.te.com

## Adapter Code (Continued)

### Table C. Adapter Code by Connector Specification

| Connector Specification | Series/Class | Adapter Code |
|---|---|---|
| 40M38277 | — | 41 |
| 40M39569 | — | 54 |
| BS9520 | G0001 | 41 |
| BS9520 | G0002 | 41 |
| BS9520 | G0003 | 40 |
| BS9522 F0012 | Patt 615 | 47 |
| BS9522 F0014 | Patt 104 | Contact TE |
| BS9522 F0017 | Patt 105 | 76 |
| BS9522 F0020 | Patt 608 | 79[2] |
| BS9522 F0023 | — | Contact TE |
| BS9522 F0029 | Patt 616 | 41 |
| BS9522 F0030 | Patt 121A | 75 |
| BS9522 F0032 | Patt 121B | 78 |
| BS9522 F0042 | — | 54 |
| BS9522 N0001 | Patt 603 | 76 |
| BS9522 N0003 | Patt 614 | 41 |
| BS9540 F0001 | Patt 602 | 54 |
| LN 29500 | — | 21 |
| LN 29504 | — | 54 |
| LN 29728 | — | 54 |
| LN 29729 | — | 47 |
| MIL-C-22992 | Class C, J, R | 32 |
| MIL-C-26482 | Series 1 | 21, 24[1] |
| MIL-C-26482 | Series 2 | 54 |
| MIL-C-26500 | Aluminum, Class F, G, R | 51 |
| MIL-C-26500 | Stainless steel, Class E, K | 52 |
| MIL-C-28840 | Class D | 30 |
| MIL-C-38999 | Series I and II | 41 |
| MIL-C-38999 | Series III and IV | 40 |
| MIL-C-5015 | MS3400 | 54 |
| MIL-C-5015 | MS3100 | 18, 15 (with endbell) |
| MIL-C-5015 | 5MS | 75 |
| MIL-C-81511 | Series 1, 2, 3, and 4 | 61 |
| MIL-C-81703 | Series 1, 2 | 71 |
| MIL-C-81703 | Series 3 | 54 |
| MIL-C-83723 | Series II | 19 |
| MIL-C-83723 | Series I and III | 54 |
| MIL-C-85049/59 | — | 32 |
| MIL-C-85049/60 | — | 54 |
| MIL-C-85049/62 | — | 41 |
| MIL-C-85049/69 | — | 40 |
| MIS-20065 | — | 54 |
| MVEE | 5MS | 75 |
| NAS 1599 | — | 54 |
| NFL 54120 | — | Contact TE |
| NFL 54140 | — | 54 |
| PAN 6432-1 | — | 54 |
| PAN 6432-2 | — | 54 |
| PAN 6433-1 | — | 41 |
| PAN 6433-2 | — | 47 |
| PRL 54125 | — | 21, 24[1] |
| VG 95234 | — | 64***, 66**, 78* |
| VG 95328 | — | Contact TE |
| VG 95329 | — | 61 |
| VG 96912 | Series 2 | 41 |
| VG 96912 | Series 1 | 47 |

[1]Code 24 connectors have an internal accessory thread.
[2]Free connectors only.

* AB connectors only
** VEAM standard
***VEAM panel mount





Catalog 1654025
Revised 3-13

www.te.com

Dimensions are shown for reference purposes only. Specifications subject to change.

Dimensions are in millimeters unless otherwise specified.

USA: +1 800 522 6752
Asia Pacific: +86 0 400 820 6015
UK: +44 800 267 666

For additional support numbers please visit www.te.com

## Adapter Family

### Selecting the Adapter Family

Using Table D below and the adapter code you selected in Table A, B, or C, select the adapter family for the adapter type you chose (spin-coupling or Tinel-Lock).

With the alphanumeric prefix for that family you can then build the part number for your TE adapter.

### Table D. Identification of Adapter Family Prefix by Adapter Code

| TE Connector Code | Boot Adapter | | Shielded Adapter | | | Tinel-Lock Adapter Straight, 45°, and 90° | CRES-Lock Band Strap Adapter |
|---|---|---|---|---|---|---|---|
| | Solid (Fixed) | Spin-Coupling | Straight | 45° | 90° | | |
| 15 | 210M5 | 202M5 | 219M0 | 219M1 | 219M2 | TXR 15 | — |
| 18 | 218M5 | 218M6 | 218M7 | 218M8 | 218M9 | TXR 18 | BND 18 |
| 19 | 201M7 | 201M4 | — | — | — | — | — |
| 21 | 203M6 | 203M9 | 206M0 | 206M1 | 206M2zx | TXR 21 | BND 21 |
| 24 | 208M5 | 208M6 | 216M0 | 216M1 | 206M5 | — | — |
| 30 | 211M8 | 211M9 | 211M5 | 211M6 | 211M7 | TXR 30 | — |
| 32 | — | 204M3 | 207M3 | 212M4 | 212M5 | TXR 32 | BND 32 |
| 40 | 209M3 | 209M4 | 208M7 | 208M8 | 208M9 | TXR 40 | BND 40 |
| 41 | 202M1 | 202M2 | 204M0 | 204M1 | 204M2 | TXR 41 | BND 41 |
| 47 | 202M8 | 202M7 | 210M0 | 210M1 | 210M2 | TXR 47 | BND 47 |
| 51 | 207M4 | 205M5 | 207M0 | 207M1 | 207M2 | TXR 51 | — |
| 52 | 208M3 | 209M6 | 208M0 | 208M1 | 208M2 | TXR 52 | — |
| 54 | 201M9 | 201M1 | 203M0 | 203M1 | 203M2 | TXR 54 | BND 54 |
| 61 | 202M3 | 202M4 | 205M0 | 205M1 | 205M2 | TXR 61 | — |
| 71 | 203M5 | 202M9 | 217M0 | 217M1 | 217M2 | TXR 71 | — |
| 75 | 228M5 | 228M7 | 227M0 | 227M1 | 227M2 | TXR 75 | — |
| 76 | 225M6 | 225M5 | — | — | — | TXR 76 | — |
| 77 | 228M6 | 228M8 | 228M0 | 228M1 | 228M2 | — | — |
| 78 | 225M4 | 225M3 | 225M0 | 225M1 | 225M2 | TXR 78 | — |
| 79 | — | 229M3 | 229M1 | 229M2 | 229M0 | TXR 79 | — |
| 80 | 215M4 | 213M5 | 213M6 | 213M7 | 213M8 | TXR 80 | — |
| 81 | 214M3 | 214M4 | 214M5 | 214M6 | 214M7 | TXR 81 | — |



Catalog 1654025
Revised 3-13

www.te.com

Dimensions are shown for reference purposes only. Specifications subject to change.

Dimensions are in millimeters unless otherwise specified.

USA: +1 800 522 6752
Asia Pacific: +86 0 400 820 6015
UK: +44 800 267 666

For additional support numbers please visit www.te.com

## Part Number

**Having Selected the Right Adapter Type and Adapter Family, You Can Now Construct a Part Number for the Adapter.**

1. Start with the alphanumeric prefix you selected in Table D. This will be the basis of your part number.
2. Add to the prefix the codes and designators required for your adapter type and application. These may include several or all of the following:
   - Order number
   - Manufacturer's prefix
   - Material
   - Finish
   - Entry size
   - Ring designator
   - Option codes

Using the right codes and designators helps ensure that the adapter you select will meet the application requirements.

To determine which codes and designators you will need, use the Part numbering system shown below. To select the right codes and designators, turn to the pages that follow.

### Part Numbering System

201M1 16 - 19 B

**Spin-Coupling or Solid Adapter**

- Adapter family
- Order number
- Manufacturer's prefix (connector code 18 only)
- Material
- Finish
- Options*

*For full range of options, consult TE.

203M0 16 - 19 B 10

**Shielded Adapter**

- Adapter family
- Order number
- Manufacturer's prefix (connector code 18 only)
- Material
- Finish
- Entry size
- Options*

- Standard braid length (6") requires no modification code.
- Nonstandard braid length is stated in inches (12 = 12" length)

*For full range of options, consult TE.

TXR54 A B 00 - 16 10 AI

**Tinel-Lock Adapter**

- Adapter family
- Material (A - aluminium alloy; S = stainless steel)
- Finish
- Angle (00 = straight; 45 = 45˚; 90 = 90˚)
- Manufacturer's prefix (connector code 18 only)
- Order number
- Entry size
- Ring designator
- Options*

*For full range of options, consult TE.





Catalog 1654025
Revised 3-13

www.te.com

Dimensions are shown for reference purposes only. Specifications subject to change.

Dimensions are in millimeters unless otherwise specified.

USA: +1 800 522 6752
Asia Pacific: +86 0 400 820 6015
UK: +44 800 267 666

For additional support numbers please visit www.te.com

## Part Number (Continued)

### CRES-Lock Band Strap Adapters Part Numbering System

BND 54 A B 00 - 12 06 A

**Product Designator**
BND — Adapter and Band
BNX — Adapter only

**Adapter Code**

**Material[2]**
A — Aluminum alloy per QQ-A-225
B — Nickel aluminum bronze per ASTM B150
S — Stainless steel per QQ-S-763

**Finish** (See S-CH00-0157-002)

**Configuration**
00 = Straight 45 = 45° 90 = 90°
4W = 45° 9W = 90°

**For BND 18, dash may be replaced by a letter**

**Order Number**

**Entry Size[3]**

**Band Termination Device Code[1]**
A — BND-1225S (Standard Supply for Americas and Asia) CRES-Lock Banding Strap
B — BND-1425S (Standard Supply European Countries)

**Notes:**
1. See Drawings BND-1225S or BND-XX25S for information on bands. Adapter dimensions for "A" designation may be different than those listed in this catalog. Contact Tyco Electronics for Specification Control Drawing (SCD) for these adapters.
2. Alternative equivalent material specifications to those shown may be supplied at Tyco Electronics' discretion.
3. For standard entry sizes see relevant specification control drawing. For entry sizes larger than standard (Type II Adapters), see sheets 3 and 4.

### Band Strap Adapter Modification Option Field (Omit if not required)

BND54AB00-1206A D F H J L N P S

**D — Drain holes modification**

**F — Internal abrasion resistant coating**

**H — Helical conduit thread**

**J — Chain attachment assembly**

**L — Lock wire holes manufacturer's option**
Include mod if required
Standard on codes 40 and 54

**Optional O-Ring material**
Omit for standard silicone (ZZ-R-765, grade 70: S59)
C — Neoprene per AMS3209
U — Fluorosilicone per MIL-R-25988, class 1
N — Nitrile (Buna N) per AMS3215
V — Fluorocarbon per MIL-R-83248, class 1

**P — Pre-coiled bandstrap option**
(See drawings BND-1225P or BND-XX25P)

**S — Self-locking spin nut**



Catalog 1654025
Revised 3-13

www.te.com

Dimensions are shown for reference purposes only. Specifications subject to change.

Dimensions are in millimeters unless otherwise specified.

USA: +1 800 522 6752
Asia Pacific: +86 0 400 820 6015
UK: +44 800 267 666

For additional support numbers please visit www.te.com

## Material and Finish

### Selecting the Material and Finish

To ensure optimum compatibility, select the adapter material and finish to match those of the connector.

Most circular connectors are manufactured from aluminum with a cadmium finish.

### Material Codes

| Material* Description | Material Code Solid, Spin-Coupling, and Shielded Adapters | Tinel-Lock Adapters | Typical Applications |
|---|---|---|---|
| Aluminum alloy | 19 | A | Standard material for normal applications |
| Stainless steel | 62 | S | Corrosion-resistant and high-temperature (firewall) applications |
| Nickel aluminum bronze | 01 | B | Exposed marine environments |

*Other materials available upon request.



### Finish Codes

| Finish* Description | Color | Finish Code | Typical Applications |
|---|---|---|---|
| Cadmium, per QQ-P-416, Type II, Class 3 over electroless nickel (500-hour salt-spray–resistant finish) | Olive drab | B | Corrosion resistance for exposed environments |
| Electroless nickel, per AMS-C-26074, Class 4, Grade B | Bright Silver | C | High conductivity for optimum screening performance |
| Anodized, hard, per MIL-A-8625, Type III, Class 2 | Black | G | Nonconductive finish for aluminum adapters |
| Passivated, per QQ-P-35 or MIL-S-5002 | — | J | Surface treatment for corrosion-resistant steel |
| Unplated, shotblast | — | W | Nonreflective finish for nickel aluminum bronze adapters |
| Zinc Nickel | Black | Z | Cadmium free plating |

*Other finishes available upon request.



Catalog 1654025
Revised 3-13

www.te.com

Dimensions are shown for reference purposes only. Specifications subject to change.

Dimensions are in millimeters unless otherwise specified.

USA: +1 800 522 6752
Asia Pacific: +86 0 400 820 6015
UK: +44 800 267 666

For additional support numbers please visit www.te.com

## Entry Size

### Determining the Wire Bundle Size

The entry size of an adapter is based on the size of the wire bundle. If you don't know the size of the wire bundle, measure a prototype or calculate the size.

Calculation of the wire bundle size is based on three values:

- Cable outside diameter (COD)
- Cable jacket thickness
- Jacketed cable diameter

Instructions for calculating these values follow.

#### COD Calculation

To calculate the cable outside diameter, first determine whether the wires in the bundle are of the same size or of different sizes.

#### COD Calculation for Wires of the Same Size

For bundles with wires that are all of the same size, follow these steps:

1. Determine the number of wires in the wire bundle.
2. Find the multiplication factor for that number in Table E shown on the next page.
3. Find the wire diameter in the Wire and Cable section (Section 9) of this catalog.
4. Multiply the wire diameter (from Step 3) by the multiplication factor (from Step 2) as shown below.

Formula: D = Fd

Where:
D = Bundle diameter

F = Multiplication factor

d = Wire diameter

Example: A bundle of wires containing 27 x 44A0111-22

F = 6.00 (the multiplication factor for 27 wires from Table E)

d = 1.19 mm (.049 in)*

D = 6 x 1.19 mm (6 x .049 in)

D = 7.14 mm (.294 in)

*Diameter of 44A0111-22 wire obtained from the Wire and Cable Section 9 of this catalog.

#### COD Calculation for Wires of Different Sizes

To determine the wire bundle diameter when using wires of different sizes, follow these steps:

1. Determine the number of wires in the wire bundle.
2. Find the diameter of the wires in the Wire and Cable section of this catalog.
3. Calculate the cable outside diameter by using this formula:

$$D = 1.2\sqrt{N1d12 + N2d\,22 + N3d32}$$

Where:
D = Bundle diameter

N = Number of wires

d = Diameter of wires

Example: A bundle of wires containing

3 x 44A0111-221* (1.192-mm dia.)

5 x 44A0111-201* (1.42-mm dia.)

1 x 44A0111-181* (1.65-mm dia.)

$$D = 1.2\sqrt{3 \times 1.192^2 + 5 \times 1.42^2 + 1 \times 1.65^2}$$
$$D = 1.2\sqrt{3 \times 1.4 + 5 \times 2.02 + 1 \times 2.7}$$
$$D = 1.2\sqrt{4.2 + 10.1 + 2.7}$$
$$D = 1.2\sqrt{17}$$
$$D = 1.2 \times 4.12$$
$$D = 4.95 \text{ mm}$$

*For wire information see the Wire and Cable Section 9 of this catalog.



Catalog 1654025
Revised 3-13

www.te.com

Dimensions are shown for reference purposes only. Specifications subject to change.

Dimensions are in millimeters unless otherwise specified.

USA: +1 800 522 6752
Asia Pacific: +86 0 400 820 6015
UK: +44 800 267 666

For additional support numbers please visit www.te.com

## Entry Size (Continued)

### Table E. Multiplication Factors for Wire Bundles with Equal Size Wires

This table provides multiplication factors for wire bundles of 1 to 61 wires.

To determine the approximate diameter of a wire bundle when the wires are all the same size, find the factor for the number of wires in the bundle and multiply the wire diameter by that factor.

| Number of Wires | Multiplication Factor | Number of Wires | Multiplication Factor |
|---|---|---|---|
| 1 | 1.00 | 32 | 6.70 |
| 2 | 1.60 | 33 | 6.70 |
| 3 | 2.00 | 34 | 7.00 |
| 4 | 2.41 | 35 | 7.00 |
| 5 | 2.70 | 36 | 7.00 |
| 6 | 3.00 | 37 | 7.00 |
| 7 | 3.00 | 38 | 7.31 |
| 8 | 3.60 | 39 | 7.31 |
| 9 | 4.00 | 40 | 7.31 |
| 10 | 4.00 | 41 | 7.61 |
| 11 | 4.00 | 42 | 7.61 |
| 12 | 4.00 | 43 | 7.61 |
| 13 | 4.41 | 44 | 7.61 |
| 14 | 4.41 | 45 | 8.00 |
| 15 | 4.70 | 46 | 8.00 |
| 16 | 4.70 | 47 | 8.00 |
| 17 | 5.00 | 48 | 8.00 |
| 18 | 5.00 | 49 | 8.41 |
| 19 | 5.00 | 50 | 8.41 |
| 20 | 5.31 | 51 | 8.41 |
| 21 | 5.31 | 52 | 8.41 |
| 22 | 5.61 | 53 | 8.70 |
| 23 | 5.61 | 54 | 8.70 |
| 24 | 5.61 | 55 | 8.70 |
| 25 | 6.00 | 56 | 8.70 |
| 26 | 6.00 | 57 | 9.00 |
| 27 | 6.00 | 58 | 9.00 |
| 28 | 6.41 | 59 | 9.00 |
| 29 | 6.41 | 60 | 9.00 |
| 30 | 6.41 | 61 | 9.00 |
| 31 | 6.70 | — | — |





Catalog 1654025
Revised 3-13

www.te.com

Dimensions are shown for reference purposes only. Specifications subject to change.

Dimensions are in millimeters unless otherwise specified.

USA: +1 800 522 6752
Asia Pacific: +86 0 400 820 6015
UK: +44 800 267 666

For additional support numbers please visit www.te.com

## Entry Size (Continued)

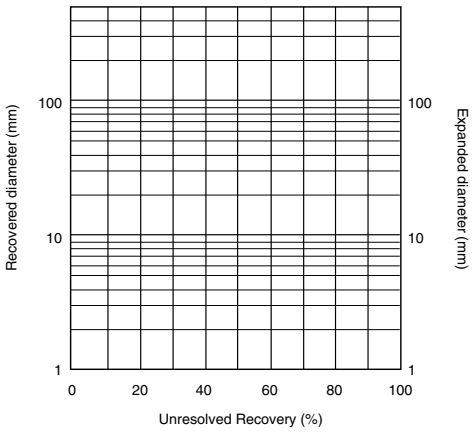


**Figure 1.**

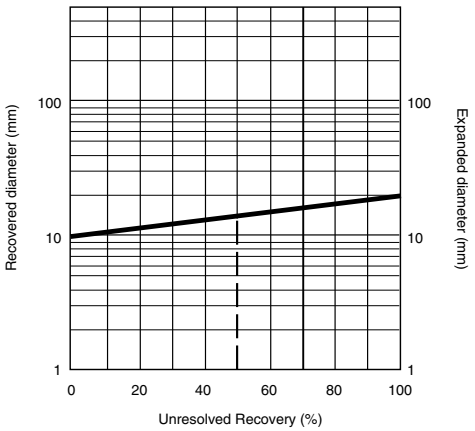


**Figure 2.**

### Cable Jacket Thickness Calculation

To determine the wall thickness of a jacket over a wire bundle:

1. Use the chart in Figure 1 to determine the unresolved recovery of the tubing jacket
2. Use the chart in Figure 3 to determine the wall thickness reduction factor.
3. Calculate the jacket wall thickness by multiplying the fully shrunk wall thickness (as detailed in the Tubing section — Section 3 — of this catalog) by the wall thickness reduction factor.

### Step 1. Determine the Unresolved Recovery of the Tubing Jacket.

1. Locate the recovered and expanded diameters of the chosen tubing size on the chart in Figure 1.
2. Lay a straight edge between the two values and pencil in a straight line connecting them.
3. Find the wire bundle diameter on the Expanded Diameter scale of the chart in Figure 1.
4. From the wire bundle diameter value, draw a straight horizontal line across the chart.
5. From the intersection of the line from step 3 and the line from step 2, read down vertically to the “Unresolved Recovery” for this combination.

Example (see Figure 2):

Recovered tubing diameter = 10 mm

Expanded tubing diameter = 20 mm

Wire bundle diameter =13 mm

Unresolved recovery = 50%



Catalog 1654025
Revised 3-13

www.te.com

Dimensions are shown for reference purposes only. Specifications subject to change.

Dimensions are in millimeters unless otherwise specified.

USA: +1 800 522 6752
Asia Pacific: +86 0 400 820 6015
UK: +44 800 267 666

For additional support numbers please visit www.te.com

## Entry Size (Continued)

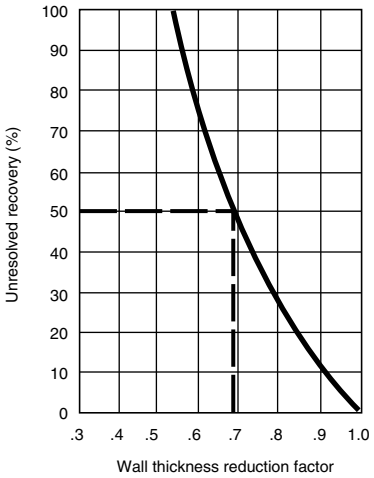


**Figure 3.**

### Step 2. Find the Wall Thickness Reduction Factor.

1. On the Unresolved Recovery scale of the chart in Figure 3 above, find the unresolved recovery value determined in Step 1.
2. From the unresolved recovery value, draw a straight line across the chart to the curved line.
3. At the point where that line intersects the chart's curved line, read vertically down to the wall thickness reduction factor.

Example shown:

Unresolved recovery = 50%

Reduction factor = 0.68

### Step 3. Calculate the Jacket Wall Thickness.

Multiply the fully shrunk wall thickness of the tubing by the reduction factor.

Example:

Fully shrunk wall thickness of tubing = 1.45 mm

Wall thickness reduction factor (from Figure 3) = 0.68

Jacket wall thickness = 1.4 x 0.68

= 0.99 mm

Note:
If the cable is to be shielded (screened), an addition must be made to the wire bundle diameter for the braid. In the example, 0.8 mm would be added to the wire bundle diameter for a single layer of RAY 101 (36 AWG) braid to make a total wire bundle diameter of 13.8 mm.





Catalog 1654025
Revised 3-13

www.te.com

Dimensions are shown for reference purposes only. Specifications subject to change.

Dimensions are in millimeters unless otherwise specified.

USA: +1 800 522 6752
Asia Pacific: +86 0 400 820 6015
UK: +44 800 267 666

For additional support numbers please visit www.te.com

## Entry Size (Continued)

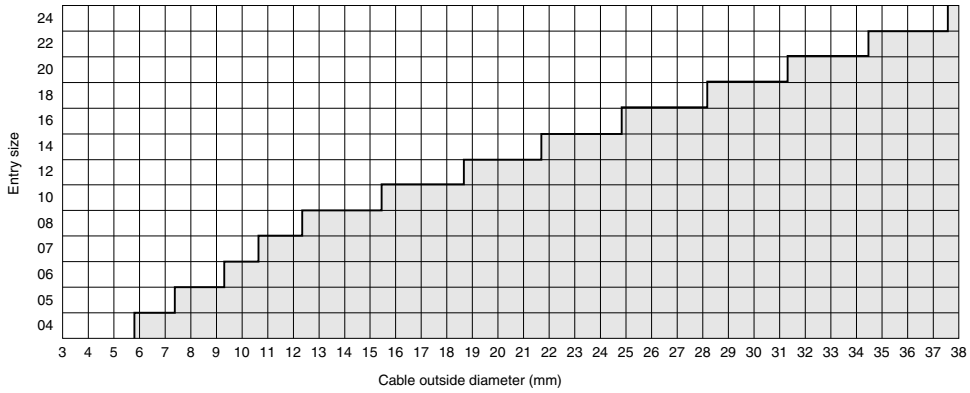


**Figure 4. Entry Size by Cable Outside Diameter (in millimeters)**

### Determining the Entry Size

Once you have the wire bundle size, you can use the chart in Figure 4 to select the entry size. This chart shows the minimum entry sizes for cables from 3 to 38 mm [.118 to 1.496 in] in diameter. In other words, the white spaces on the chart represent all of the cable outside diameters each entry size will fit.

Follow these steps:

1. Find the cable diameter on the chart.
2. Note the lowest entry size that will fit the cable diameter

### Braided Adapters

The extreme flexibility of the braid on these adapters accommodates a large range of cable diameters. It is therefore recommended that the standard entry size for any given adapter part number be specified as indicated on the relevant data sheet. Nonstandard entry sizes are available on special order.

Use the selection chart in Figure 4 to ensure that the standard entry size will pass over the jacketed cable diameter.

### Tinel-Lock Adapters

With Tinel-Lock adapters, the cable braid must be opened up to fit onto the outside diameter of the adapter entry. For optimum performance, select the smallest entry size that will pass over the jacketed cable diameter. Repair of the connector will be easier using the boot and shield rollback if a slightly larger than minimum entry size is used.

The selection chart in Figure 4 shows the minimum entry sizes for cable diameters in the range of 3 mm to 38 mm. This will ensure that the jacketed cable passes through the adapter for easy assembly.

It should be checked to be sure the braid will open sufficiently to fit the entry size selected and to ensure that the braid and boot can be rolled back.



Catalog 1654025
Revised 3-13

www.te.com

Dimensions are shown for reference purposes only. Specifications subject to change.

Dimensions are in millimeters unless otherwise specified.

USA: +1 800 522 6752
Asia Pacific: +86 0 400 820 6015
UK: +44 800 267 666

For additional support numbers please visit www.te.com

## Entry Size (Continued)

### Ray 101 Tinned-Copper Braid

TE manufactures a range of Raychem tubular braided shields (sometimes called "screens") that are used for shielding hand-built harnesses.

These braids are specially designed to have:

- Good surface transfer impedance
- Large opening ratio
- Good handling characteristics
- Compatibility with Tinel-Lock adapters

Sizes are available to cover wire bundle diameters from 2.5 to 38 [.10 to 1.50]. The table below shows the wire bundle diameter range for each braid size and also shows which adapter entry sizes are compatible with each of these braids and bundle diameters.

The entry sizes do not allow for the additional thickness of the braid and the heat-shrunk cable jacket.

### Ray 101 Data

| Part No. | Number of Carriers | Number of Ends/ Carrier | Individual Strand Size (mm/AWG) | Wire Bundle Diameter Range | | | Tinel Adapter Entry Size (Single-Layer Braid) |
|---|---|---|---|---|---|---|---|
| | | | | Min. | Max. | Wall Thickness (Nom.) | |
| RAY 101-3.0 | 16 | 10 | 0.1 [38] | 2.5 [.10] | 5.0 [.20] | N/A | N/A |
| RAY 101-4.0 | 24 | 7 | 0.13 [36] | 3.5 [.14] | 7.5 [.30] | 0.4 [.02] | 04* |
| RAY 101-6.0 | 24 | 9 | 0.13 [36] | 4.0 [.16] | 9.5 [.37] | 0.4 [.02] | 04, 05, 06*, 07 |
| RAY 101-7.5 | 24 | 14 | 0.13 [36] | 6.0 [.24] | 14.0 [.55] | 0.4 [.02] | 05, 06, 07, 10* |
| RAY 101-10.0 | 36 | 12 | 0.13 [36] | 8.0 [.31] | 22.0 [.87] | 0.4 [.02] | 07, 08, 10 12* |
| RAY 101-12.5 | 36 | 15 | 0.13 [36] | 10.0 [.39] | 24.0 [.94] | 0.4 [.02] | 08, 10, 12,14, 16* |
| RAY 101-20.0 | 48 | 16 | 0.13 (36] | 16.0 [.63] | 38.0 [1.50] | 0.4 [.02] | 12, 14, 16, 18, 20, 22 |

*Combination is not preferred; use only if absolutely necessary.





Catalog 1654025
Revised 3-13

www.te.com

Dimensions are shown for reference purposes only. Specifications subject to change.

Dimensions are in millimeters unless otherwise specified.

USA: +1 800 522 6752
Asia Pacific: +86 0 400 820 6015
UK: +44 800 267 666

For additional support numbers please visit www.te.com

## Tinel-Lock Ring

### Tinel-Lock Ring and Braid

The Tinel-Lock ring designator must be specified according to the type of cable braid used, and is added to the part number after the adapter entry size. There are two types of ring, AI and BI, for each entry size.

Tinel rings are marked with thermochromic paint, which changes color when the correct installation temperature is reached. BI-type rings are identified with a red spot.

Braid type, material, and construction are variable. Refer to drawing CH00-0250-008 for Tinel-Lock adapters.

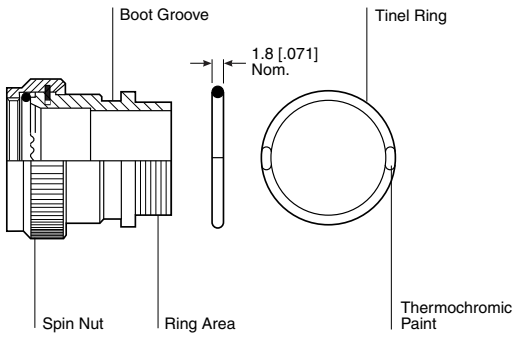


| Braid Type | Ring Designator |
|---|---|
| Single layer 36 AWG | AI |
| Single layer 34 AWG | AI |
| Single layer 32 AWG | BI |
| Single layer 30 AWG | BI |
| Double layer 36 AWG | BI |
| Double layer 34 AWG | BI |

A or B = Size of Braid  I = Insulating Layer

**Table F.**
**Wire Gauge (AWG) to Diameter Cross-Reference**

**Use this table to establish wire gauge if not known.**

| Wire Gauge (AWG) | Diameter |
|---|---|
| 40 | 0.079 [0.0031] |
| 39 | 0.089 [0.0035] |
| 38 | 0.102 [0.0040] |
| 37 | 0.114 [0.0045] |
| 36 | 0.127 [0.0050] |
| 35 | 0.142 [0.0056] |
| 34 | 0.160 [0.0063] |
| 33 | 0.180 [0.0071] |
| 32 | 0.203 [0.0080] |
| 31 | 0.226 [0.0089] |
| 30 | 0.254 [0.0100] |
| 29 | 0.287 [0.0113] |
| 28 | 0.320 [0.0126] |

*Note: It may be necessary to use an 'A' rather than a 'B" ring on entry sizes 04-07 when terminating a multicore cable with double layer machined braid. Braid applied by machine provides less size flexibility than pull-on braid at the smaller entry sizes. If disturbance during assembly causes loss of braid lay, grip of the tinel ring may be affected. Evaluation is recommended. Contact TE for more information.

| Available in: | Americas | Europe | Asia Pacific |
|---|---|---|---|
| | ■ | ■ | ■ |



Catalog 1654025
Revised 3-13

www.te.com

Dimensions are shown for reference purposes only. Specifications subject to change.

Dimensions are in millimeters unless otherwise specified.

USA: +1 800 522 6752
Asia Pacific: +86 0 400 820 6015
UK: +44 800 267 666

For additional support numbers please visit www.te.com

## CRES-Lock Bands

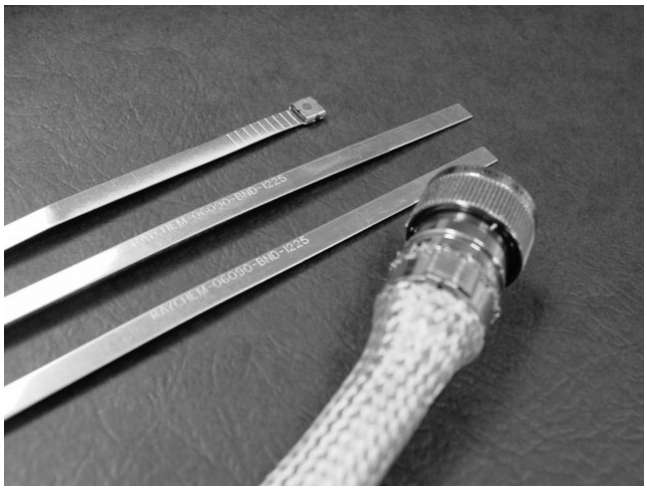

The CRES-Lock band strap designator must be specified when using a band adapter. There are two forms of band that are available — precoiled and straight. Straight is a standard configuration and does not require any notation. If precoiled bands are required, an option P must be used. Refer to CH00-0250-016 drawing for more detailed information. CRES-Lock band strap comes in 12 inch length. These fit all entry sizes for both the CRES-Lock adapter.



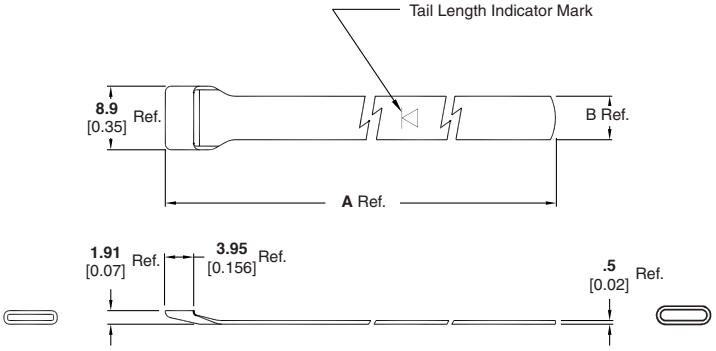


One Step Clamping Band — Straight

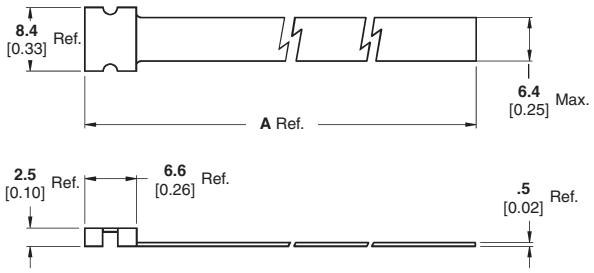


Two Step Clamping Band — Straight

| Part Number | Entry SIzes | A Ref. ±1.5 [±0.06] |
|---|---|---|
| BND-1225S | 03 to 24 | **305.0**<br>12.00 |
| BND-0812S | 04 to 14 | **304.8**<br>12.00 |

| Available in: | Americas | Europe | Asia Pacific |
|---|---|---|---|
| | ■ | ■ | ■ |



Catalog 1654025
Revised 3-13

www.te.com

Dimensions are shown for reference purposes only. Specifications subject to change.

Dimensions are in millimeters unless otherwise specified.

USA: +1 800 522 6752
Asia Pacific: +86 0 400 820 6015
UK: +44 800 267 666

For additional support numbers please visit www.te.com

## Code 18 MIL-C-5015 (MS3100)

### Braided Adapters

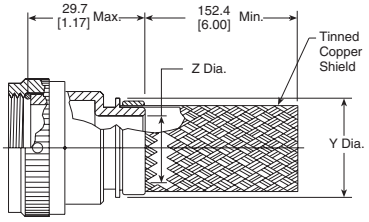


**218M7XX-XXXXX**

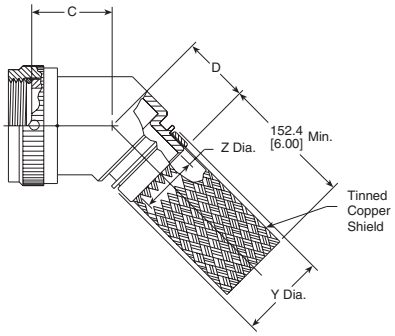


**218M8XX-XXXXX**

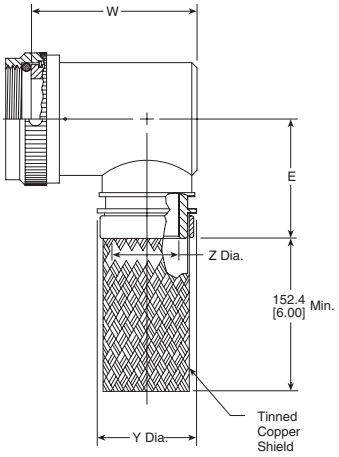


**218M9XX-XXXXX**

| Manufacturer Code | Connector Manufacturer MS3100/3101/3106 |
|---|---|
| A | Amphenol-Class A |
| B | Bendix-Class A/E/R |
| C | Cannon-Class A/E/R |
| D* | Unknown-Class A/E/R |
| R | Amphenol-Class R |
| — | Manufacturer code not required |

*Additional pieces supplied when manufacturer is unknown.
All thread sizes for order number apply.

| Available in: | Americas | Europe | Asia Pacific |
|---|---|---|---|
| | ■ | ■ | ■ |



Catalog 1654025
Revised 3-13

www.te.com

Dimensions are shown for reference purposes only. Specifications subject to change.

Dimensions are in millimeters unless otherwise specified.

USA: +1 800 522 6752
Asia Pacific: +86 0 400 820 6015
UK: +44 800 267 666

For additional support numbers please visit www.te.com

## Code 18 MIL-C-5015 (MS3100) (Continued)

### Braided Adapters
(continued)

#### Table of Dimensions

| Order No. | Shell Size | Manufacturer Code | Max. Entry Size, Type 1** | Thread | Dimensions | | |
|---|---|---|---|---|---|---|---|
| | | | | | C Max. | D Max. | E Max. |
| 08 | 8S | B | 04 | .375-32 UNEF | 20.3 [0.80] | 23.4 [0.92] | 31.2 [1.23] |
| 08 | 8S | C | 04 | .438-28 UNEF | 20.3 [0.80] | 23.4 [0.92] | 31.2 [1.23] |
| 08 | 8S | A, R | 04 | .438-27 UNS | 20.3 [0.80] | 23.4 [0.92] | 31.2 [1.23] |
| 08 | 8S | D | 04 | See * above. | 20.3 [0.80] | 23.4 [0.92] | 31.2 [1.23] |
| 10 | 10S | — | 06 | .500-28 UNEF | 21.1 [0.83] | 24.1 [0.95] | 31.2 [1.23] |
| 11 | 10SL | C | 07 | .562-24 UNEF | 21.1 [0.83] | 24.1 [0.83] | 31.2 [1.23] |
| 11 | 10SL | A, B, R | 07 | .625-24 UNEF | 21.1 [0.83] | 24.1 [0.95] | 31.2 [1.23] |
| 11 | 10SL | D | 07 | See * above. | 21.1 [0.83] | 24.1 [0.95] | 31.2 [1.23] |
| 12 | 12 & 12S | B, C | 08 | .625-24 UNEF | 21.1 [0.83] | 24.1 [0.95] | 31.2 [1.23] |
| 12 | 12 & 12S | A, R | 08 | .688-24 UNEF | 21.8 [0.86] | 24.9 [0.98] | 33.0 [1.30] |
| 12 | 12 & 12S | D | 08 | See * above. | 21.8 [0.86] | 24.9 [0.98] | 33.0 [1.30] |
| 14 | 14 & 14S | — | 10 | .750-20 UNEF | 21.8 [0.86] | 24.9 [0.98] | 33.0 [1.30] |
| 16 | 16 & 16S | — | 12 | .875-20 UNEF | 22.6 [0.89] | 25.9 [1.02] | 36.1 [1.42] |
| 18 | 18 | — | 12 | 1.000-20 UNEF | 23.4 [0.92] | 26.7 [1.05] | 37.6 [1.48] |
| 20 | 20 | A, B, C | 16 | 1.125-18 UNEF | 24.1 [0.95] | 27.4 [1.08] | 39.4 [1.55] |
| 20 | 20 | R | 16 | 1.125-24 UNS | 24.1 [0.95] | 27.4 [1.08] | 39.4 [1.55] |
| 20 | 20 | D | 16 | See * above. | 24.1 [0.95] | 27.4 [1.08] | 39.4 [1.55] |
| 22 | 22 | — | 18 | 1.250-18 UNEF | 24.9 [0.98] | 28.2 [1.11] | 40.9 [1.61] |
| 24 | 24 | — | 20 | 1.375-18 UNEF | 24.9 [0.98] | 28.2 [1.11] | 42.4 [1.67] |
| 28 | 28 | — | 24 | 1.625-18 UNEF | 27.4 [1.08] | 29.7 [1.17] | 47.2 [1.86] |
| 32 | 32 | B, C | 24 | 1.875-16 UN | 28.2 [1.11] | 31.2 [1.23] | 48.8 [1.92] |
| 32 | 32 | A, R | 24 | 1.906-18 UN | 28.2 [1.11] | 31.2 [1.23] | 48.8 [1.92] |
| 32 | 32 | D | 24 | See * above. | 28.2 [1.11] | 31.2 [1.23] | 48.8 [1.92] |
| 36 | 36 | B | 24 | 2.062-16 UNS | 31.2 [1.23] | 32.3 [1.27] | 52.1 [2.05] |
| 36 | 36 | R | 24 | 2.062-20 UNS | 31.2 [1.23] | 32.3 [1.27] | 52.1 [2.05] |
| 36 | 36 | C | 24 | 2.125-16 UN | 31.2 [1.23] | 32.3 [1.27] | 52.1 [2.05] |
| 36 | 36 | A | 24 | 2.125-18 UNS | 31.2 [1.23] | 32.3 [1.27] | 52.1 [2.05] |
| 36 | 36 | D | 24 | See * above. | 31.2 [1.23] | 32.3 [1.27] | 52.1 [2.05] |
| 40 | 40 | B | 24 | 2.312-16 UNS | 32.3 [1.27] | 33.0 [1.30] | 55.1 [2.17] |
| 40 | 40 | A, C, R | 24 | 2.375-16 UN | 32.3 [1.27] | 33.0 [1.30] | 55.1 [2.17] |
| 40 | 40 | D | 24 | See * above. | 32.3 [1.27] | 33.0 [1.30] | 55.1 [2.17] |
| 44 | 44 | – | 24 | 2.625-16 UN | 34.0 [1.34] | 34.5 [1.36] | 61.5 [2.42] |
| 48 | 48 | C | 24 | 2.812-18 UNS | 34.0 [1.34] | 34.5 [1.36] | 61.5 [2.42] |
| 48 | 48 | A, R | 24 | 2.875-16 UN | 34.0 [1.34] | 34.5 [1.36] | 61.5 [2.42] |
| 48 | 48 | D | 24 | See * above. | 34.0 [1.34] | 34.5 [1.36] | 61.5 [2.42] |

**For larger than maximum type 1 entry sizes, a two-piece adapter will be supplied. Contact TE for information.

#### Entry Size Dimensions

| Entry Size | Dimensions | | |
|---|---|---|---|
| | Z Dia. +0.25–0.5 | Y Dia. ±0.38 | W Max. |
| 04 | 6.35 [0.250] | 11.58 [0.456] | 31.2 [1.23] |
| 05 | 7.92 [0.312] | 13.08 [0.515] | 32.8 [1.29] |
| 06 | 9.53 [0.375] | 14.76 [0.581] | 34.3 [1.35] |
| 07 | 11.13 [0.438] | 16.33 [0.643] | 36.1 [1.42] |
| 08 | 12.70 [0.500] | 17.91 [0.705] | 37.6 [1.48] |
| 10 | 15.88 [0.625] | 21.11 [0.831] | 40.6 [1.60] |
| 12 | 19.05 [0.750] | 24.21 [0.953] | 43.9 [1.73] |
| 14 | 22.23 [0.875] | 27.46 [1.081] | 47.0 [1.85] |
| 16 | 25.40 [1.000] | 30.61 [1.205] | 50.8 [2.00] |
| 18 | 28.58 [1.125] | 35.08 [1.381] | 54.1 [2.13] |
| 20 | 31.75 [1.250] | 38.25 [1.506] | 57.2 [2.25] |
| 22 | 34.93 [1.375] | 41.43 [1.631] | — |
| 24 | 38.10 [1.500] | 44.60 [1.756] | — |





Catalog 1654025
Revised 3-13

www.te.com

Dimensions are shown for reference purposes only. Specifications subject to change.

Dimensions are in millimeters unless otherwise specified.

USA: +1 800 522 6752
Asia Pacific: +86 0 400 820 6015
UK: +44 800 267 666

For additional support numbers please visit www.te.com

## Code 18 MIL-C-5015 (MS3100) (Continued)

### Solid Adapters

| Manufacturer Code | Connector Manufacturer MS3100/3101/3106 |
|---|---|
| A | Amphenol-Class A |
| B | Bendix-Class A/E/R |
| C | Cannon-Class A/E/R |
| D* | Unknown-Class A/E/R |
| R | Amphenol-Class R |
| — | Manufacturer code not required |

*Additional pieces supplied when manufacturer is unknown.
All thread sizes for order number apply.

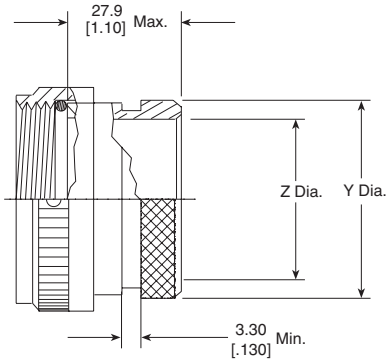


218M6XX-XXX

### Table of Dimensions

| Order No. | Shell Size | Manufacturer Code | Thread | Dimensions | |
|---|---|---|---|---|---|
| | | | | Y ±0.5 | Z Min. |
| 08 | 8S | B | .375–32 UNEF | 13.2 [0.52] | 6.22 [0.24] |
| 08 | 8S | C | .438–28 UNEF | 13.2 [0.52] | 7.80 [0.31] |
| 08 | 8S | A, R | .438–27 UNS | 13.2 [0.52] | 7.80 [0.31] |
| 08 | 8S | D | See * above. | 13.2 [0.52] | 7.80 [0.31] |
| 10 | 10S | — | .500–28 UNEF | 15.0 [0.59] | 9.40 [0.37] |
| 11 | 10SL | C | .562–24 UNEF | 15.0 [0.59] | 11.00 [0.43] |
| 11 | 10SL | A, B, R | .625–24 UNEF | 19.3 [0.76] | 12.57 [0.49] |
| 11 | 10SL | D | See * above. | 19.3 [0.76] | 11.00 [0.43] |
| 12 | 12 & 12S | B, C | .625–24 UNEF | 19.3 [0.76] | 12.57 [0.49] |
| 12 | 12 & 12S | A, R | .688–24 UNEF | 19.3 [0.76] | 14.15 [0.56] |
| 12 | 12 & 12S | D | See * above. | 19.3 [0.76] | 12.57 [0.49] |
| 14 | 14 & 14S | — | .750–20 UNEF | 20.9 [0.82] | 15.75 [0.62] |
| 16 | 16 & 16S | — | .875–20 UNEF | 24.1 [0.95] | 18.92 [0.74] |
| 18 | 18 | — | 1.000 - 20 UNEF | 26.1 [1.03] | 20.50 [0.81] |
| 20 | 20 | A, B, C | 1.125–18 UNEF | 34.0 [1.34] | 25.27 [0.99] |
| 20 | 20 | R | 1.125–24 UNS | 34.0 [1.34] | 25.27 [0.99] |
| 20 | 20 | D | See * above. | 34.0 [1.34] | 25.27 [0.99] |
| 22 | 22 | — | 1.250–18 UNEF | 36.3 [1.43] | 28.45 [1.12] |
| 24 | 24 | — | 1.375–18 UNEF | 40.5 [1.59] | 31.62 [1.24] |
| 28 | 28 | — | 1.625–18 UNEF | 43.0 [1.69] | 34.80 [1.37] |
| 32 | 32 | B, C | 1.875–16 UN | 48.4 [1.91] | 41.15 [1.62] |
| 32 | 32 | A, R | 1.906–18 UN | 48.4 [1.91] | 41.15 [1.62] |
| 32 | 32 | D | See * above. | 48.4 [1.91] | 41.15 [1.62] |
| 36 | 36 | B | 2.062–16 UNS | 54.7 [2.15] | 47.50 [1.87] |
| 36 | 36 | R | 2.062–20 UNS | 54.7 [2.15] | 47.50 [1.87] |
| 36 | 36 | C | 2.125–16 UN | 54.7 [2.15] | 47.50 [1.87] |
| 36 | 36 | A | 2.125–18 UNS | 54.7 [2.15] | 47.50 [1.87] |
| 36 | 36 | D | See * above. | 54.7 [2.15] | 47.50 [1.87] |
| 40 | 40 | B | 2.312–16 UNS | 60.6 [2.39] | 53.85 [2.12] |
| 40 | 40 | A, C, R | 2.375–16 UN | 60.6 [2.39] | 53.85 [2.12] |
| 40 | 40 | D | See * above. | 60.6 [2.39] | 53.85 [2.12] |
| 44 | 44 | – | 2.625–16 UN | 67.1 [2.64] | 60.20 [2.37] |
| 48 | 48 | C | 2.812–18 UNS | 73.5 [2.89] | 66.55 [2.62] |
| 48 | 48 | A, R | 2.875–16 UN | 73.5 [2.89] | 66.55 [2.62] |
| 48 | 48 | D | See * above. | 73.5 [2.89] | 66.55 [2.62] |

| Available in: | Americas | Europe | Asia Pacific |
|---|---|---|---|
| | ■ | ■ | ■ |



Catalog 1654025
Revised 3-13

www.te.com

Dimensions are shown for reference purposes only. Specifications subject to change.

Dimensions are in millimeters unless otherwise specified.

USA: +1 800 522 6752
Asia Pacific: +86 0 400 820 6015
UK: +44 800 267 666

For additional support numbers please visit www.te.com

## Code 18 MIL-C-5015 (MS3100) (Continued)

### Solid Adapters
(continued)

### Molded Part Selection Guide (Solid)

| Y Diameter | Standard K Parts | | | Low-Profile D Parts | | |
|---|---|---|---|---|---|---|
| | Straight Part No. | 90° Part No. | Cable OD (min.) | Straight Part No. | 90° Part No. | Cable OD (Min.) |
| 13.2 [0.52] | 202W232 | — | 4.3 [0.19] | — | — | — |
| 13.2 [0.52] | 202K121 | 222K121 | 5.6 [0.22] | 202D211 | 222D211 | 6.4 [0.25] |
| 15.0 [0.59] | 202K132 | 222K132 | 5.9 [0.23] | 202D221 | 222D221 | 7.4 [0.29] |
| 19.2 [0.76] | 202K142 | 222K142 | 7.1 [0.28] | 202D232 | 222D232 | 8.4 [0.33] |
| 20.9 [0.82] | 202K142 | 222K142 | 7.1 [0.28] | 202D232 | 222D232 | 8.4 [0.33] |
| 24.1 [0.95] | 202K153 | 222K152 | 8.4 [0.33] | 202D242 | 222D242 | 9.7 [0.38] |
| 26.1 [1.03] | 202K153 | 222K152 | 8.4 [0.33] | 202D242 | 222D242 | 9.7 [0.38] |
| 34.0 [1.34] | 202K163 | 222K163 | 9.9 [0.33] | 202D253 | 222D253 | 10.4 [0.41] |
| 36.2 [1.43] | 202K174 | 222K174 | 15.7 [0.62] | 202D263 | 222D263 | 12.2 [0.48] |
| 40.5 [1.59] | 202K174 | 222K174 | 15.7 [0.62] | 202D263 | 222D263 | 12.2 [0.48] |
| 43.0 [1.69] | 202K174 | 222K174 | 15.7 [0.62] | 202D263 | 222D263 | 12.2 [0.48] |
| 48.4 [1.91] | 202K185 | 222K185 | 16.8 [0.66] | 202D274 | 222D274 | 14.3 [0.56] |
| 54.7 [2.15] | 202K185 | 222K185 | 16.8 [0.66] | 202D274 | 222D274 | 14.3 [0.56] |
| 60.6 [2.39] | — | — | — | 202D285 | 222D285 | 17.5 [0.68] |
| 67.1 [2.64] | — | — | — | 202D296 | 222D296 | 19.6 [0.76] |
| 73.5 [2.89] | — | — | — | 202D299 | 222D299 | 22.9 [0.89] |

### Uniboot Parts

| Y Diameter | Part No. | Cable OD (Min.) |
|---|---|---|
| 13.2 [0.52] | 202C611 | 4.8 [0.19] |
| 15.0 [0.59] | 202C621 | 8.1 [0.32] |
| 19.3 [0.76] | 202C621 | 8.1 [0.32] |
| 20.9 [0.82] | 202C632 | 12.7 [0.50] |
| 24.1 [0.95] | 202C632 | 12.7 [0.50] |
| 26.1 [1.03] | 202C642 | 17.5 [0.69] |
| 34.0 [1.34] | 202C653 | 22.4 [0.88] |
| 36.3 [1.43] | 202C653 | 22.4 [0.88] |
| 40.5 [1.59] | 202C653 | 22.4 [0.88] |
| 43.0 [1.69] | 202C663 | 22.9 [0.90] |
| 48.4 [1.91] | 202C663 | 22.9 [0.90] |
| 54.7 [2.15] | 202C663 | 22.9 [0.90] |
| 60.6 [2.39] | 202C663 | 22.9 [0.90] |
| 67.1 [2.64] | 202C663 | 22.9 [0.90] |
| 73.5 [2.89] | 202C663 | 22.9 [0.90] |





Catalog 1654025
Revised 3-13

www.te.com

Dimensions are shown for reference purposes only. Specifications subject to change.

Dimensions are in millimeters unless otherwise specified.

USA: +1 800 522 6752
Asia Pacific: +86 0 400 820 6015
UK: +44 800 267 666

For additional support numbers please visit www.te.com

## Code 18 MIL-C-5015 (MS3100) (Continued)

### Spin-Coupling Adapters

| Manufacturer Code | Connector Manufacturer MS3100/3101/3106 |
|---|---|
| A | Amphenol-Class A |
| B | Bendix-Class A/E/R |
| C | Cannon-Class A/E/R |
| D* | Unknown-Class A/E/R |
| R | Amphenol-Class R |
| — | Manufacturer code not required |

*Additional pieces supplied when manufacturer is unknown.
All thread sizes for order number apply.

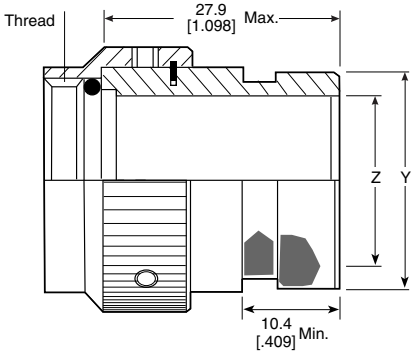


**218M6XX-XXX**

### Table of Dimensions

| Order No. | Shell Size | Manufacturer Code | Thread | Dimensions | |
|---|---|---|---|---|---|
| | | | | Y ±0.5 | Z Min. |
| 08 | 8S | B | .375–32 UNEF | 13.2 [0.52] | 6.22 [0.24] |
| 08 | 8S | C | .438–28 UNEF | 13.2 [0.52] | 7.80 [0.31] |
| 08 | 8S | A, R | .438–27 UNS | 13.2 [0.52] | 7.80 [0.31] |
| 08 | 8S | D | See * above. | 13.2 [0.52] | 7.80 [0.31] |
| 10 | 10S | — | .500–28 UNEF | 15.0 [0.59] | 9.40 [0.37] |
| 11 | 10SL | C | .562–24 UNEF | 15.0 [0.59] | 11.00 [0.43] |
| 11 | 10SL | A, B, R | .625–24 UNEF | 19.3 [0.76] | 12.57 [0.49] |
| 11 | 10SL | D | See * above. | 19.3 [0.76] | 11.00 [0.43] |
| 12 | 12 & 12S | B, C | .625–24 UNEF | 19.3 [0.76] | 12.57 [0.49] |
| 12 | 12 & 12S | A, R | .688–24 UNEF | 19.3 [0.76] | 14.15 [0.56] |
| 12 | 12 & 12S | D | See * above. | 19.3 [0.76] | 12.57 [0.49] |
| 14 | 14 & 14S | — | .750–20 UNEF | 20.9 [0.82] | 15.75 [0.62] |
| 16 | 16 & 16S | — | .875–20 UNEF | 24.1 [0.95] | 18.92 [0.74] |
| 18 | 18 | — | 1.000 - 20 UNEF | 26.1 [1.03] | 20.50 [0.81] |
| 20 | 20 | A, B, C | 1.125–18 UNEF | 34.0 [1.34] | 25.27 [0.99] |
| 20 | 20 | R | 1.125–24 UNS | 34.0 [1.34] | 25.27 [0.99] |
| 20 | 20 | D | See * above. | 34.0 [1.34] | 25.27 [0.99] |
| 22 | 22 | — | 1.250–18 UNEF | 36.3 [1.43] | 28.45 [1.12] |
| 24 | 24 | — | 1.375–18 UNEF | 40.5 [1.59] | 31.62 [1.24] |
| 28 | 28 | — | 1.625–18 UNEF | 43.0 [1.69] | 34.80 [1.37] |
| 32 | 32 | B, C | 1.875–16 UN | 48.4 [1.91] | 41.15 [1.62] |
| 32 | 32 | A, R | 1.906–18 UN | 48.4 [1.91] | 41.15 [1.62] |
| 32 | 32 | D | See * above. | 48.4 [1.91] | 41.15 [1.62] |
| 36 | 36 | B | 2.062–16 UNS | 54.7 [2.15] | 47.50 [1.87] |
| 36 | 36 | R | 2.062–20 UNS | 54.7 [2.15] | 47.50 [1.87] |
| 36 | 36 | C | 2.125–16 UN | 54.7 [2.15] | 47.50 [1.87] |
| 36 | 36 | A | 2.125–18 UNS | 54.7 [2.15] | 47.50 [1.87] |
| 36 | 36 | D | See * above. | 54.7 [2.15] | 47.50 [1.87] |
| 40 | 40 | B | 2.312–16 UNS | 60.6 [2.39] | 53.85 [2.12] |
| 40 | 40 | A, C, R | 2.375–16 UN | 60.6 [2.39] | 53.85 [2.12] |
| 40 | 40 | D | See * above | 60.6 [2.39] | 53.85 [2.12] |
| 44 | 44 | – | 2.625–16 UN | 67.1 [2.64] | 60.20 [2.37] |
| 48 | 48 | C | 2.812–18 UNS | 73.5 [2.89] | 66.55 [2.62] |
| 48 | 48 | A, R | 2.875–16 UN | 73.5 [2.89] | 66.55 [2.62] |
| 48 | 48 | D | See * above | 73.5 [2.89] | 66.55 [2.62] |

| Available in: | Americas | Europe | Asia Pacific |
|---|---|---|---|
| | ■ | ■ | ■ |



Catalog 1654025
Revised 3-13

www.te.com

Dimensions are shown for reference purposes only. Specifications subject to change.

Dimensions are in millimeters unless otherwise specified.

USA: +1 800 522 6752
Asia Pacific: +86 0 400 820 6015
UK: +44 800 267 666

For additional support numbers please visit www.te.com

## Code 18 MIL-C-5015 (MS3100) (Continued)

### Molded Part Selection Guide (Spin-Coupling)

| Y Diameter | Standard K Parts | | | Low-Profile D Parts | | |
|---|---|---|---|---|---|---|
| | Straight Part No. | 90° Part No. | Cable OD (Min.) | Straight Part No. | 90° Part No. | Cable OD (Min.) |
| 13.2 [0.52] | | 202W232 | 4.3 [0.19] | | | |
| 13.2 [0.52] | 202K121 | 222K121 | 5.6 [0.22] | 202D211 | 222D211 | 6.4 [0.25] |
| 15.0 [0.59] | 202K132 | 222K132 | 5.9 [0.23] | 202D221 | 222D221 | 7.4 [0.29] |
| 19.2 [0.76] | 202K142 | 222K142 | 7.1 [0.28] | 202D232 | 222D232 | 8.4 [0.33] |
| 20.9 [0.82] | 202K142 | 222K142 | 7.1 [0.28] | 202D232 | 222D232 | 8.4 [0.33] |
| 24.1 [0.95] | 202K153 | 222K152 | 8.4 [0.33] | 202D242 | 222D242 | 9.7 [0.38] |
| 26.1 [1.03] | 202K153 | 222K152 | 8.4 [0.33] | 202D242 | 222D242 | 9.7 [0.38] |
| 34.0 [1.34] | 202K163 | 222K163 | 9.9 [0.33] | 202D253 | 222D253 | 10.4 [0.41] |
| 36.2 [1.43] | 202K174 | 222K174 | 15.7 [0.62] | 202D263 | 222D263 | 12.2 [0.48] |
| 40.5 [1.59] | 202K174 | 222K174 | 15.7 [0.62] | 202D263 | 222D263 | 12.2 [0.48] |
| 43.0 [1.69] | 202K174 | 222K174 | 15.7 [0.62] | 202D263 | 222D263 | 12.2 [0.48] |
| 48.4 [1.91] | 202K185 | 222K185 | 16.8 [0.66] | 202D274 | 222D274 | 14.3 [0.56] |
| 54.7 [2.15] | 202K185 | 222K185 | 16.8 [0.66] | 202D274 | 222D274 | 14.3 [0.56] |

### Uniboot Parts

| Y Diameter | Part No. | Cable OD (Min.) |
|---|---|---|
| 13.2 [0.52] | 202C611 | 4.8 [0.19] |
| 15.0 [0.59] | 202C621 | 8.1 [0.32] |
| 19.3 [0.76] | 202C621 | 8.1 [0.32] |
| 20.9 [0.82] | 202C632 | 12.7 [0.50] |
| 24.1 [0.95] | 202C632 | 12.7 [0.50] |
| 26.1 [1.03] | 202C642 | 17.5 [0.69] |
| 34.0 [1.34] | 202C653 | 22.4 [0.88] |
| 36.3 [1.43] | 202C653 | 22.4 [0.88] |
| 40.5 [1.59] | 202C653 | 22.4 [0.88] |
| 43.0 [1.69] | 202C663 | 22.9 [0.90] |
| 48.4 [1.91] | 202C663 | 22.9 [0.90] |
| 54.7 [2.15] | 202C663 | 22.9 [0.90] |





Catalog 1654025
Revised 3-13

www.te.com

Dimensions are shown for reference purposes only. Specifications subject to change.

Dimensions are in millimeters unless otherwise specified.

USA: +1 800 522 6752
Asia Pacific: +86 0 400 820 6015
UK: +44 800 267 666

For additional support numbers please visit www.te.com

## Code 18 MIL-C-5015 (MS3100) (Continued)

### Tinel-Lock Adapters

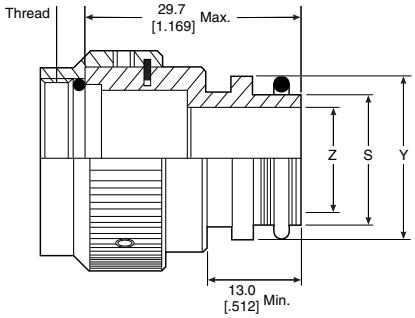


**TXR18XX00-XXXXXX**

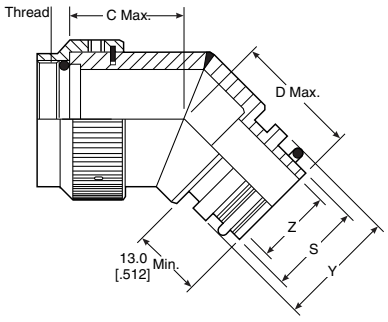


**TXR18XX45-XXXXXX**

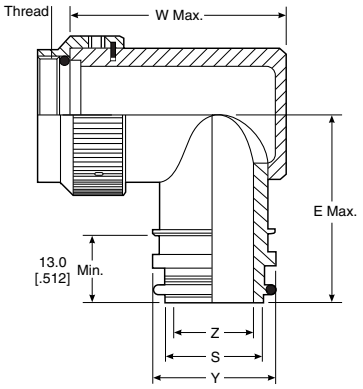


**TXR18XX90-XXXXXX**

| Manufacturer Code | Connector Manufacturer MS3100/3101/3106 |
|---|---|
| A | Amphenol-Class A |
| B | Bendix-Class A/E/R |
| C | Cannon-Class A/E/R |
| D* | Unknown-Class A/E/R |
| R | Amphenol-Class R |
| — | Manufacturer code not required |

*Additional pieces supplied when manufacturer is unknown.
All thread sizes for order number apply.

| Available in: | Americas | Europe | Asia Pacific |
|---|---|---|---|
| | ■ | ■ | ■ |



Catalog 1654025
Revised 3-13

www.te.com

Dimensions are shown for reference purposes only. Specifications subject to change.

Dimensions are in millimeters unless otherwise specified.

USA: +1 800 522 6752
Asia Pacific: +86 0 400 820 6015
UK: +44 800 267 666

For additional support numbers please visit www.te.com

## Code 18 MIL-C-5015 (MS3100) (Continued)

### Tinel-Lock Adapters
(continued)

### Table of Dimensions

| Order No. | Shell Size | Manufacturer Code | Max. Entry Size, Type 1** | Thread | Dimensions | | |
|---|---|---|---|---|---|---|---|
| | | | | | C Max. | D Max. | E Max. |
| 08 | 8S | B | 04 | .375-32 UNEF | 20.3 [0.80] | 23.4 [0.92] | 31.2 [1.23] |
| 08 | 8S | C | 04 | .438-28 UNEF | 20.3 [0.80] | 23.4 [0.92] | 31.2 [1.23] |
| 08 | 8S | A, R | 04 | .438-27 UNS | 20.3 [0.80] | 23.4 [0.92] | 31.2 [1.23] |
| 08 | 8S | D | 04 | * | 20.3 [0.80] | 23.4 [0.92] | 31.2 [1.23] |
| 10 | 10S | — | 06 | .500-28 UNEF | 21.1 [0.83] | 24.1 [0.95] | 31.2 [1.23] |
| 11 | 10SL | C | 07 | .562-24 UNEF | 21.1 [0.83] | 24.1 [0.83] | 31.2 [1.23] |
| 11 | 10SL | A, B, R | 07 | .625-24 UNEF | 21.1 [0.83] | 24.1 [0.95] | 31.2 [1.23] |
| 11 | 10SL | D | 07 | * | 21.1 [0.83] | 24.1 [0.95] | 31.2 [1.23] |
| 12 | 12 & 12S | B, C | 08 | .625-24 UNEF | 21.1 [0.83] | 24.1 [0.95] | 31.2 [1.23] |
| 12 | 12 & 12S | A, R | 08 | .688-24 UNEF | 21.8 [0.86] | 24.9 [0.98] | 33.0 [1.30] |
| 12 | 12 & 12S | D | 08 | * | 21.8 [0.86] | 24.9 [0.98] | 33.0 [1.30] |
| 14 | 14 & 14S | — | 10 | .750-20 UNEF | 21.8 [0.86] | 24.9 [0.98] | 33.0 [1.30] |
| 16 | 16 & 16S | — | 12 | .875-20 UNEF | 22.6 [0.89] | 25.9 [1.02] | 36.1 [1.42] |
| 18 | 18 | — | 12 | 1.000-20 UNEF | 23.4 [0.92] | 26.7 [1.05] | 37.6 [1.48] |
| 20 | 20 | A, B, C | 16 | 1.125-18 UNEF | 24.1 [0.95] | 27.4 [1.08] | 39.4 [1.55] |
| 20 | 20 | R | 16 | 1.125-24 UNS | 24.1 [0.95] | 27.4 [1.08] | 39.4 [1.55] |
| 20 | 20 | D | 16 | * | 24.1 [0.95] | 27.4 [1.08] | 39.4 [1.55] |
| 22 | 22 | — | 18 | 1.250-18 UNEF | 24.9 [0.98] | 28.2 [1.11] | 40.9 [1.61] |
| 24 | 24 | — | 20 | 1.375-18 UNEF | 24.9 [0.98] | 28.2 [1.11] | 42.4 [1.67] |
| 28 | 28 | — | 22 | 1.625-18 UNEF | 27.4 [1.08] | 29.7 [1.17] | 47.2 [1.86] |
| 32 | 32 | B, C | 24 | 1.875-16 UN | 28.2 [1.11] | 31.2 [1.23] | 48.8 [1.92] |
| 32 | 32 | A, R | 24 | 1.906-18 UN | 28.2 [1.11] | 31.2 [1.23] | 48.8 [1.92] |
| 32 | 32 | D | 24 | * | 28.2 [1.11] | 31.2 [1.23] | 48.8 [1.92] |
| 36 | 36 | B | 24 | 2.062-16 UNS | 31.2 [1.23] | 32.3 [1.27] | 52.1 [2.05] |
| 36 | 36 | R | 24 | 2.062-20 UNS | 31.2 [1.23] | 32.3 [1.27] | 52.1 [2.05] |
| 36 | 36 | C | 24 | 2.125-16 UN | 31.2 [1.23] | 32.3 [1.27] | 52.1 [2.05] |
| 36 | 36 | A | 24 | 2.125-18 UNS | 31.2 [1.23] | 32.3 [1.27] | 52.1 [2.05] |
| 36 | 36 | D | 24 | * | 31.2 [1.23] | 32.3 [1.27] | 52.1 [2.05] |
| 40 | 40 | B | 24 | 2.312-16 UNS | 32.3 [1.27] | 33.0 [1.30] | 55.1 [2.17] |
| 40 | 40 | A, C, R | 24 | 2.375-16 UN | 32.3 [1.27] | 33.0 [1.30] | 55.1 [2.17] |
| 40 | 40 | D | 24 | * | 32.3 [1.27] | 33.0 [1.30] | 55.1 [2.17] |
| 44 | 44 | — | 24 | 2.625-16 UN | 34.0 [1.34] | 34.5 [1.36] | 61.5 [2.42] |
| 48 | 48 | C | 24 | 2.812-18 UNS | 34.0 [1.34] | 34.5 [1.36] | 61.5 [2.42] |
| 48 | 48 | A, R | 24 | 2.875-16 UN | 34.0 [1.34] | 34.5 [1.36] | 61.5 [2.42] |
| 48 | 48 | D | 24 | * | 34.0 [1.34] | 34.5 [1.36] | 61.5 [2.42] |

* Additional pieces, etc. (from page 6-36)
**For larger than maximum type 1 entry sizes, a two-piece adapter will be supplied. Contact TE for information.





Catalog 1654025
Revised 3-13

www.te.com

Dimensions are shown for reference purposes only. Specifications subject to change.

Dimensions are in millimeters unless otherwise specified.

USA: +1 800 522 6752
Asia Pacific: +86 0 400 820 6015
UK: +44 800 267 666

For additional support numbers please visit www.te.com

## Code 18 MIL-C-5015 (MS3100) (Continued)

### Tinel-Lock Adapters
(continued)

#### Entry Size Dimensions

| Entry Size | Dimensions | | | |
|---|---|---|---|---|
| | Z Dia. +0.25–0.5 | S Diameter (min.–max.) | Y Dia. ±0.38 | W Max. |
| 04 | 6.35 [0.25] | 9.39–9.56 [0.37–0.38] | 13.97 [0.55] | 31.50 [1.24] |
| 05 | 7.92 [0.31] | 10.97–11.13 [0.43–0.44] | 15.54 [0.61] | 34.30 [1.35] |
| 06 | 9.52 [0.37] | 12.57–12.73 [0.49–0.50] | 17.14 [0.67] | 35.80 [1.41] |
| 07 | 11.09 [0.44] | 14.12–14.31 [0.55–0.56] | 18.71 [0.74] | 37.30 [1.47] |
| 08 | 12.70 [0.50] | 15.72–15.91 [0.62–0.63] | 20.32 [0.80] | 39.10 [1.54] |
| 10 | 15.87 [0.62] | 18.84–19.11 [0.74–0.75] | 23.49 [0.92] | 41.40 [1.63] |
| 12 | 19.05 [0.75] | 22.02–22.28 [0.87–0.88] | 26.67 [1.05] | 45.50 [1.79] |
| 14 | 22.23 [0.88] | 25.17–25.46 [0.99–1.00] | 29.84 [1.17] | 48.80 [1.92] |
| 16 | 25.40 [1.00] | 28.34–28.63 [1.12–1.13] | 33.02 [1.30] | 51.80 [2.04] |
| 18 | 28.57 [1.12] | 31.52–31.81 [1.24–1.25] | 36.19 [1.42] | 54.90 [2.16] |
| 20 | 31.75 [1.25] | 34.69–34.98 [1.37–1.38] | 39.37 [1.55] | 58.20 [2.29] |
| 22 | 34.93 [1.38] | 37.79–38.15 [1.49–1.50] | 42.55 [1.68] | 66.80 [2.63] |
| 24 | 38.10 [1.50] | 40.97–41.33 [1.61–1.63] | 45.72 [1.80] | 70.10 [2.76] |

#### Molded Part Selection Guide (Tinel)

| Tinel-Lock Entry Size | Standard K Parts | | | Low-Profile D Parts | | |
|---|---|---|---|---|---|---|
| | Straight Part No. | 90° Part No. | Cable OD (min.) | Straight Part No. | 90° Part No. | Cable OD (Min.) |
| 04 | 202K232 | — | 3.30 [0.13] | — | — | — |
| 04 | 202W232 | — | 4.30 [0.19] | — | — | — |
| 04 | 202K121 | 222K121 | 5.60 [0.22] | 202D211 | 222D211 | 6.40 [0.25] |
| 05, 06 | 202K132 | 222K132 | 5.90 [0.23] | 202D221 | 222D221 | 7.40 [0.29] |
| 07, 08 | 202K142 | 222K142 | 7.10 [0.28] | 202D232 | 222D232 | 8.40 [0.33] |
| 10, 12 | 202K153 | 222K152 | 8.40 [0.33] | 202D242 | 222D242 | 9.70 [0.38] |
| 14, 16 | 202K163 | 222K163 | 9.90 [0.39] | 202D253 | 222D253 | 10.50 [0.41] |
| 18, 20, 22 | 202K174 | 222K174 | 15.70 [0.62] | 202D263 | 222D263 | 12.20 [0.48] |
| 24 | 202K185 | 222K185 | 16.80 [0.66] | — | — | — |

#### Uniboot Parts

| Tinel-Lock Entry Size | Part No. | Cable OD (min.) |
|---|---|---|
| 04 | 202C611 | 4.8 [0.19] |
| 05, 06, 07 | 202C621 | 8.1 [0.32] |
| 08, 10, 12 | 202C632 | 12.7 [0.50] |
| 12, 14, 16 | 202C642 | 17.5 [0.69] |
| 16, 18, 20, 22 | 202C653 | 22.4 [0.88] |



Catalog 1654025
Revised 3-13

www.te.com

Dimensions are shown for reference purposes only. Specifications subject to change.

Dimensions are in millimeters unless otherwise specified.

USA: +1 800 522 6752
Asia Pacific: +86 0 400 820 6015
UK: +44 800 267 666

For additional support numbers please visit www.te.com

## Code 21 MIL-C-26482 Series 1

### Braided Adapters

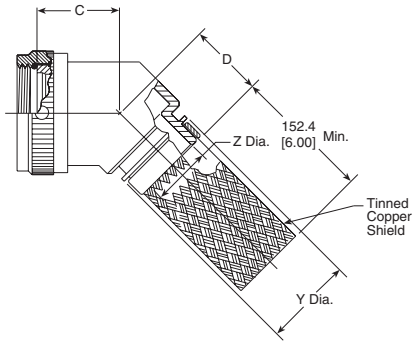


206M1XX-XXXXX

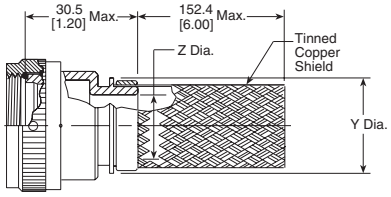


206M0XX-XXXXX

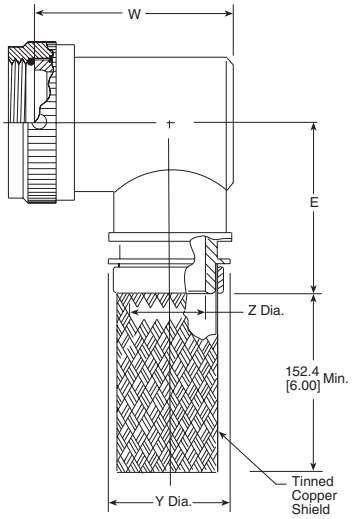


206M2XX-XXXXX

### Table of Dimensions

| Order No. | Shell Size | Max. Entry Size, Type 1* | Thread | Dimensions | | |
|---|---|---|---|---|---|---|
| | | | | C Max. | D Max. | E Max. |
| 08 | 8 | 04 | .438-28 UNEF | 21.6 [0.85] | 23.1 [0.91] | 29.0 [1.14] |
| 10 | 10 | 06 | .562-24 UNEF | 22.4 [0.88] | 23.9 [0.94] | 30.5 [1.20] |
| 12 | 12 | 08 | .688-24 UNEF | 23.1 [0.91] | 24.6 [0.97] | 32.3 [1.27] |
| 14 | 14 | 10 | .812-20 UNEF | 23.4 [0.92] | 24.9 [0.98] | 33.5 [1.32] |
| 16 | 16 | 12 | .938-20 UNEF | 24.1 [0.95] | 25.7 [1.01] | 34.8 [1.37] |
| 18 | 18 | 12 | 1.062-18 UNEF | 24.4 [0.96] | 25.9 [1.02] | 36.3 [1.43] |
| 20 | 20 | 14 | 1.188-18 UNEF | 25.1 [0.99] | 26.7 [1.05] | 38.1 [1.50] |
| 22 | 22 | 16 | 1.312-18 UNEF | 25.7 [1.01] | 27.4 [1.08] | 39.6 [1.56] |
| 24 | 24 | 18 | 1.438-18 UNEF | 26.2 [1.03] | 27.7 [1.09] | 40.9 [1.61] |

*For larger than maximum type 1 entry sizes, a two-piece adapter will be supplied. Contact TE for information.

### Entry Size Dimensions

| Entry Size | Dimensions | | |
|---|---|---|---|
| | Z +0.25–0.5 | Y Dia. | W Max. |
| 04 | 6.35 [0.25] | 13.97 [0.55] | 31.0 [1.22] |
| 05 | 7.92 [0.31] | 15.54 [0.61] | 32.8 [1.29] |
| 06 | 9.52 [0.37] | 17.14 [0.67] | 34.3 [1.35] |
| 07 | 11.09 [0.44] | 18.71 [0.74] | 35.8 [1.41] |
| 08 | 12.70 [0.50] | 20.32 [0.80] | 37.3 [1.47] |
| 10 | 15.87 [0.62] | 23.49 [0.92] | 40.6 [1.60] |
| 12 | 19.05 [0.75] | 26.67 [1.05] | 43.7 [1.72] |
| 14 | 22.23 [0.88] | 29.84 [1.17] | 47.0 [1.85] |
| 16 | 25.40 [1.00] | 33.02 [1.30] | 50.0 [1.97] |
| 18 | 28.57 [1.12] | 36.19 [1.42] | 53.3 [2.10] |

| Available in: | Americas | Europe | Asia Pacific |
|---|---|---|---|
| | ■ | ■ | ■ |





Catalog 1654025
Revised 3-13

www.te.com

Dimensions are shown for reference purposes only. Specifications subject to change.

Dimensions are in millimeters unless otherwise specified.

USA: +1 800 522 6752
Asia Pacific: +86 0 400 820 6015
UK: +44 800 267 666

For additional support numbers please visit www.te.com

## Code 21 MIL-C-26482 Series 1 (Continued)

### Solid Adapters

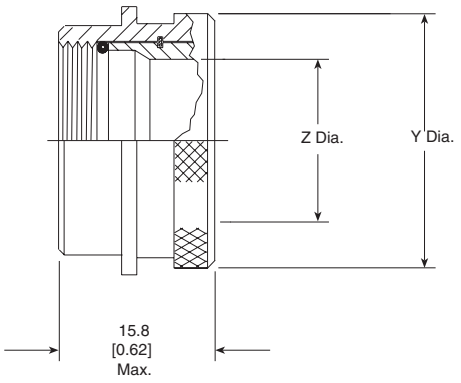


**203M6XX-XXX**

### Table of Dimensions

| Order Number | Shell Size | Thread | Dimensions | |
|---|---|---|---|---|
| | | | Y +0.000-0.030 (+0.00) (-0.76) Dia. | Z Min. |
| 08 | 8 | .438-28 UNEF | 17.88 [0.704] | 6.63 [0.26] |
| 10 | 10 | .562-24 UNEF | 21.06 [0.829] | 9.27 [0.36] |
| 12 | 12 | .688-24 UNEF | 24.23 [0.954] | 12.98 [0.51] |
| 14 | 14 | .812-20 UNEF | 27.41 [1.079] | 15.37 [0.61] |
| 16 | 16 | .938-20 UNEF | 31.85 [1.254] | 18.54 [0.73] |
| 18 | 18 | 1.062-18 UNEF | 33.03 [1.316] | 20.90 [0.82] |
| 20 | 20 | 1.188-18 UNEF | 36.63 [1.442] | 24.10 [0.95] |
| 22 | 22 | 1.312-18 UNEF | 39.78 [1.566] | 27.28 [1.07] |
| 24 | 24 | 1.438-18 UNEF | 42.98 [1.692] | 29.67 [1.17] |

### Molded Part Selection Guide (Solid)

| Order No. | Standard K Parts | | | Low-Profile D Parts | | |
|---|---|---|---|---|---|---|
| | Straight Part No. | 90° Part No. | Cable OD (Min.) | Straight Part No. | 90° Part No. | Cable OD (Min.) |
| 08 | 202K132 | 222K132 | 5.9 [0.23] | 202D221 | 222D221 | 7.4 [0.29] |
| 10 | 202K142 | 222K142 | 7.1 [0.28] | 202D232 | 222D232 | 8.4 [0.33] |
| 12, 14 | 202K153 | 222K152 | 8.4 [0.33] | 202D242 | 222D242 | 9.7 [0.38] |
| 16, 18 | 202K163 | 222K163 | 9.9 [0.39] | 202D253 | 222D253 | 10.5 [0.41] |
| 20, 22, 24 | 202K174 | 222K174 | 15.7 [0.62] | 202D263 | 222D263 | 12.2 [0.48] |

### Uniboot Parts

| Order No. | Part No. | Cable OD (Min.) |
|---|---|---|
| 08 | 202C621 | 8.1 [0.32] |
| 10 | 202C632 | 12.7 [0.50] |
| 12, 14 | 202C642 | 17.5 [0.69] |
| 16, 18, 20, 22, 24 | 202C653 | 22.4 [0.88] |

| Available in: | Americas | Europe | Asia Pacific |
|---|---|---|---|
| | ■ | ■ | ■ |



Catalog 1654025
Revised 3-13

www.te.com

Dimensions are shown for reference purposes only. Specifications subject to change.

Dimensions are in millimeters unless otherwise specified.

USA: +1 800 522 6752
Asia Pacific: +86 0 400 820 6015
UK: +44 800 267 666

For additional support numbers please visit www.te.com

## Code 21 MIL-C-26482 Series 1 (Continued)

### Spin-Coupling Adapters

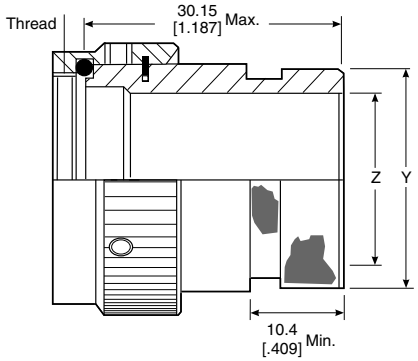


**203M9XX-XXX**

### Table of Dimensions

| Order No. | Shell Size | Thread | Dimensions | |
|---|---|---|---|---|
| | | | Y +0.00–0.76 Dia. | Z Min. |
| 08 | 8 | .438-28 UNEF | 13.54 [0.53] | 6.63 [0.26] |
| 10 | 10 | .562-24 UNEF | 15.37 [0.61] | 9.27 [0.36] |
| 12 | 12 | .688-24 UNEF | 19.66 [0.77] | 12.98 [0.51] |
| 14 | 14 | .812-20 UNEF | 21.29 [0.84] | 15.37 [0.61] |
| 16 | 16 | .938-20 UNEF | 24.46 [0.96] | 18.54 [0.73] |
| 18 | 18 | 1.062-18 UNEF | 26.47 [1.04] | 20.90 [0.82] |
| 20 | 20 | 1.188-18 UNEF | 30.91 [1.22] | 24.10 [0.95] |
| 22 | 22 | 1.312-18 UNEF | 34.42 [1.36] | 27.28 [1.07] |
| 24 | 24 | 1.438-18 UNEF | 36.65 [1.44] | 29.67 [1.17] |

### Molded Part Selection Guide (Spin-Coupling)

| Order No. | Standard K Parts | | | Low-profile D Parts | | |
|---|---|---|---|---|---|---|
| | Straight Part No. | 90° Part No. | Cable OD (Min.) | Straight Part No. | 90° Part No. | Cable OD (Min.) |
| 08 | 202W232 | — | 4.3 [0.19] | — | — | — |
| 08 | 202K121 | 222K121 | 5.6 [0.22] | 202D211 | 222D211 | 6.4 [0.25] |
| 10 | 202K132 | 222K132 | 5.9 [0.23] | 202D221 | 222D221 | 7.4 [0.29] |
| 12, 14 | 202K142 | 222K142 | 7.1 [0.28] | 202D232 | 222D232 | 8.4 [0.33] |
| 16, 18 | 202K153 | 222K152 | 8.4 [0.33] | 202D242 | 222D242 | 9.7 [0.38] |
| 20, 22 | 202K163 | 222K163 | 9.9 [0.39] | 202D253 | 222D253 | 10.5 [0.41] |
| 24 | 202K174 | 222K174 | 15.7 [0.62] | 202D263 | 222D263 | 12.2 [0.48] |

### Uniboot Parts

| Order No. | Part No. | Cable OD (Min.) |
|---|---|---|
| 08 | 202C611 | 4.8 [0.19] |
| 10, 12 | 202C621 | 8.1 [0.32] |
| 14, 16 | 202C632 | 12.7 [0.50] |
| 18, 20 | 202C642 | 17.5 [0.69] |
| 22, 24 | 202C653 | 22.4 [0.88] |

| Available in: | Americas | Europe | Asia Pacific |
|---|---|---|---|
| | ■ | ■ | ■ |





Catalog 1654025
Revised 3-13

www.te.com

Dimensions are shown for reference purposes only. Specifications subject to change.

Dimensions are in millimeters unless otherwise specified.

USA: +1 800 522 6752
Asia Pacific: +86 0 400 820 6015
UK: +44 800 267 666

For additional support numbers please visit www.te.com

## Code 21 MIL-C-26482 Series 1 (Continued)

### Tinel-Lock Adapters

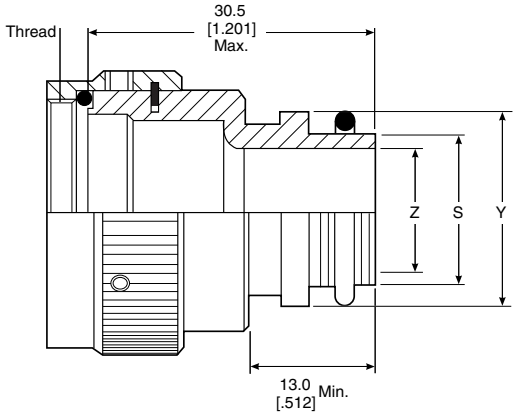


**TXR21XX00-XXXX XX**

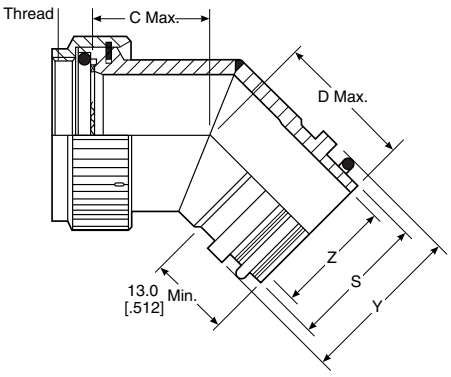


**TXR21XX45-XXXXXX**

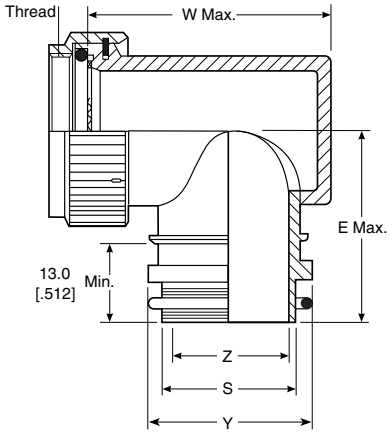


**TXR21XX90-XXXXXX**

| Available in: | Americas | Europe | Asia Pacific |
|---|---|---|---|
| | ■ | ■ | ■ |



Catalog 1654025
Revised 3-13

www.te.com

Dimensions are shown for reference purposes only. Specifications subject to change.

Dimensions are in millimeters unless otherwise specified.

USA: +1 800 522 6752
Asia Pacific: +86 0 400 820 6015
UK: +44 800 267 666

For additional support numbers please visit www.te.com

## Code 21 MIL-C-26482 Series 1 (Continued)

### Tinel-Lock Adapters
(continued)

### Table of Dimensions

| Order No. | Shell Size | Max. Entry Size, Type 1* | Thread | Dimensions | | |
|---|---|---|---|---|---|---|
| | | | | C Max. | D Max. | E Max. |
| 08 | 8 | 04 | .438-28 UNEF | 21.6 [0.85] | 23.1 [0.91] | 29.0 [1.14] |
| 10 | 10 | 06 | .562-24 UNEF | 22.4 [0.88] | 23.9 [0.94] | 30.5 [1.20] |
| 12 | 12 | 08 | .688-24 UNEF | 23.1 [0.91] | 24.6 [0.97] | 32.3 [1.27] |
| 14 | 14 | 10 | .812-20 UNEF | 23.4 [0.92] | 24.9 [0.98] | 33.5 [1.32] |
| 16 | 16 | 12 | .938-20 UNEF | 24.1 [0.95] | 25.7 [1.01] | 34.8 [1.37] |
| 18 | 18 | 12 | 1.062-18 UNEF | 24.4 [0.96] | 25.9 [1.02] | 36.3 [1.43] |
| 20 | 20 | 14 | 1.188-18 UNEF | 25.1 [0.99] | 26.7 [1.05] | 38.1 [1.50] |
| 22 | 22 | 16 | 1.312-18 UNEF | 25.7 [1.01] | 27.4 [1.08] | 39.6 [1.56] |
| 24 | 24 | 18 | 1.438-18 UNEF | 26.2 [1.03] | 27.7 [1.09] | 40.9 [1.61] |

*For larger than maximum type 1 entry sizes, a two-piece adapter will be supplied. Contact TE for information.

### Entry Size Dimensions

| Entry Size | Dimensions | | | |
|---|---|---|---|---|
| | Z +0.25–0.5 | S Diameter(Min.–Max.) | Y Dia. | W Max. |
| 04 | 6.35 [0.25] | 9.39–9.56 [0.37–0.38] | 13.97 [0.55] | 31.0 [1.22] |
| 05 | 7.92 [0.31] | 10.97–11.13 [0.43–0.44] | 15.54 [0.61] | 32.8 [1.29] |
| 06 | 9.52 [0.37] | 12.57–12.73 [0.49–0.50] | 17.14 [0.67] | 34.3 [1.35] |
| 07 | 11.09 [0.44] | 14.12–14.31 [0.55–0.56] | 18.71 [0.74] | 35.8 [1.41] |
| 08 | 12.7 [0.50] | 15.72–15.91 [0.62–0.63] | 20.32 [0.80] | 37.3 [1.47] |
| 10 | 15.87 [0.62] | 18.84–19.11 [0.74–0.75] | 23.49 [0.92] | 40.6 [1.60] |
| 12 | 19.05 [0.75] | 22.02–22.28 [0.87–0.88] | 26.67 [1.05] | 43.7 [1.72] |
| 14 | 22.23 [0.88] | 25.17–25.46 [0.99–1.00] | 29.84 [1.17] | 47.0 [1.85] |
| 16 | 25.4 [1.00] | 28.34–28.63 [1.12–1.13] | 33.02 [1.30] | 50.0 [1.97] |
| 18 | 28.57 [1.12] | 31.52–31.81 [1.24–1.25] | 36.19 [1.42] | 53.3 [2.10] |

### Molded Part Selection Guide (Tinel)

| Tinel-Lock Entry Size | Standard K Parts | | | Low-profile D Parts | | |
|---|---|---|---|---|---|---|
| | Straight Part No. | 90° Part No. | Cable OD (Min.) | Straight Part No. | 90° Part No. | Cable OD (Min.) |
| 04 | 202K232 | — | 3.3 [0.1] | — | — | — |
| 04 | 202W232 | — | 4.3 [0.2] | — | — | — |
| 04 | 202K121 | 222K121 | 5.6 [0.2] | 202D211 | 222D211 | 6.4 [0.3] |
| 05, 06 | 202K132 | 222K132 | 5.9 [0.2] | 202D221 | 222D221 | 7.4 [0.3] |
| 07, 08 | 202K142 | 222K142 | 7.1 [0.3] | 202D232 | 222D232 | 8.4 [0.3] |
| 10, 12 | 202K153 | 222K152 | 8.4 [0.3] | 202D242 | 222D242 | 9.7 [0.4] |
| 14, 16 | 202K163 | 222K163 | 9.9 [0.4] | 202D253 | 222D253 | 10.5 [0.4] |
| 18, 20, 22 | 202K174 | 222K174 | 15.7 [0.6] | 202D263 | 222D263 | 12.2 [0.5] |
| 24 | 202K185 | 222K185 | 16.8 [0.7] | — | — | — |

### Uniboot Parts

| Tinel-Lock Entry Size | Part No. | Cable OD (Min.) |
|---|---|---|
| 04 | 202C611 | 4.8 [0.19] |
| 05, 06, 07 | 202C621 | 8.1 [0.32] |
| 08, 10, 12 | 202C632 | 12.7 [0.50] |
| 12, 14, 16 | 202C642 | 17.5 [0.69] |
| 16, 18, 20, 22 | 202C653 | 22.4 [0.88] |
| 24 | 202C663 | 22.9 [0.90] |





Catalog 1654025
Revised 3-13

www.te.com

Dimensions are shown for reference purposes only. Specifications subject to change.

Dimensions are in millimeters unless otherwise specified.

USA: +1 800 522 6752
Asia Pacific: +86 0 400 820 6015
UK: +44 800 267 666

For additional support numbers please visit www.te.com

## Code 21 MIL-C-26482 Series 1 (Continued)

### CRES-Lock Adapters (USA)
### BND Adapters (Europe)

### Code 21 Band Strap Adapter

**Notes:**
1. This product is designed to terminate a braided cable shield by means of a band strap and a heat shrinkable lipped boot to a connector.
2. See CH00-0250-016 for ordering information, modifications and additional dimensions.
3. See drawing BND-XX25S for band strap dimensions and information.
4. Adapter to be permanently marked with code identification number and full part number (e.g. 06090-BND21AB00-1812). Band strap shall bear no part marking.
5. All entry sizes are shown in Table II. Maximum entry sizes are as shown in Table I. For larger entry sizes than the maximum, a Type II adapter may be supplied. See CH00-0250-016 for further details.
6. Adapter mates to: MIL-C-26482 Series I, MS3110, MS3116, MS3120 and MS3126 Class E and F Connectors.
7. Anti-rotational set screw, 3 threaded holes 120° ± 5° apart, single mating set screw supplied: AN565DC4H2. Not required for Type II adapters.

**For additional codes available, contact TE.**

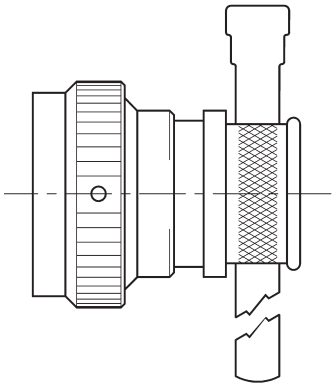

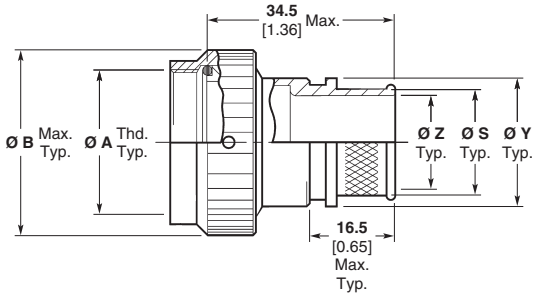


**Straight Adapter**
**Code 00**

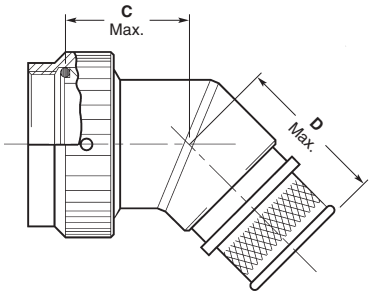


**45° Adapter**
**Code 45**

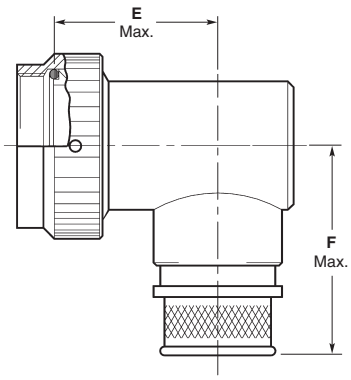


**90° Adapter**
**Code 90**

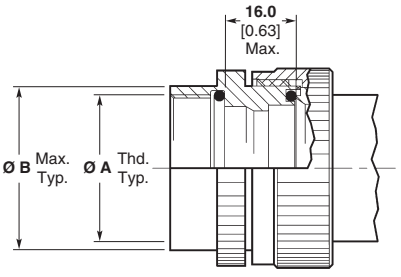


**Type II Modification**
**(See Note 5)**

| Available in: | Americas | Europe | Asia Pacific |
|---|---|---|---|
| | ■ | ■ | ■ |



Catalog 1654025
Revised 3-13

www.te.com

Dimensions are shown for reference purposes only. Specifications subject to change.

Dimensions are in millimeters unless otherwise specified.

USA: +1 800 522 6752
Asia Pacific: +86 0 400 820 6015
UK: +44 800 267 666

For additional support numbers please visit www.te.com

## Code 21 MIL-C-26482 Series 1 (Continued)

### CRES-Lock Adapters (USA) BND Adapters (Europe) (continued)

### Code 21 Band Strap Adapter (Continued)

**Table I**

| Order Number | Shell Size[2] | Entry Size Max. Type I[1] | Ø A Unified Thread UNEF Class 2B | Ø B Max. | C Max. | D Max. | F Max. |
|---|---|---|---|---|---|---|---|
| 08 | 08 | 04 | 0.4375–28 | **18.3** 0.72 | **21.6** 0.85 | **27.2** 1.07 | **33.0** 1.30 |
| 10 | 10 | 06 | 0.5625–24 | **21.6** 0.85 | **22.4** 0.88 | **27.9** 1.10 | **34.5** 1.36 |
| 12 | 12 | 08 | 0.6875–24 | **24.9** 0.98 | **23.1** 0.91 | **28.7** 1.13 | **36.3** 1.43 |
| 14 | 14 | 10 | 0.8125–20 | **28.2** 1.11 | **23.4** 0.92 | **29.0** 1.14 | **37.6** 1.48 |
| 16 | 16 | 12 | 0.9375–20 | **31.2** 1.23 | **24.1** 0.95 | **29.7** 1.17 | **38.9** 1.53 |
| 18 | 18 | 13 | 1.0625–18 | **34.5** 1.36 | **24.4** 0.96 | **30.0** 1.18 | **40.4** 1.59 |
| 20 | 20 | 15 | 1.1875–18 | **37.6** 1.48 | **25.1** 0.99 | **30.7** 1.21 | **42.2** 1.66 |
| 22 | 22 | 16 | 1.3125–18 | **40.6** 1.60 | **25.7** 1.01 | **31.5** 1.24 | **43.7** 1.72 |
| 24 | 24 | 18 | 1.4375–18 | **43.2** 1.70 | **26.2** 1.03 | **31.8** 1.25 | **45.0** 1.77 |

1. All entry sizes are shown in Table II. Maximum entry sizes are as shown in Table I. For larger entry sizes than the maximum, a Type II adapter may be supplied. See CH00-0250-016 for further details.
2. Adapter mates to: MIL-C-26482 Series I, MS3110, MS3116, MS3120 and MS3126 Class E and F Connectors.

**Table II**

| Entry Size | Ø Z +0.25/-0.50 [+0.010/-0.020] | Ø S ±0.51 [±0.020] | Ø Y ±0.38 [±0.015] | E Max. |
|---|---|---|---|---|
| 03 | **4.75** 0.188 | **7.92** 0.312 | **11.10** 0.438 | **19.0** 0.75 |
| 04 | **6.35** 0.250 | **9.52** 0.375 | **12.70** 0.500 | **19.8** 0.78 |
| 05 | **7.92** 0.312 | **11.12** 0.438 | **14.30** 0.563 | **20.1** 0.79 |
| 06 | **9.52** 0.375 | **12.70** 0.500 | **15.88** 0.625 | **21.1** 0.83 |
| 07 | **11.12** 0.438 | **14.30** 0.562 | **17.50** 0.689 | **21.6** 0.85 |
| 08 | **12.70** 0.500 | **15.88** 0.625 | **19.05** 0.750 | **22.6** 0.89 |
| 09 | **14.30** 0.562 | **17.50** 0.688 | **20.65** 0.813 | **23.6** 0.93 |
| 10 | **15.88** 0.625 | **19.05** 0.750 | **22.23** 0.875 | **24.4** 0.96 |
| 11 | **17.50** 0.688 | **20.65** 0.812 | **23.80** 0.938 | **24.9** 0.98 |
| 12 | **19.05** 0.750 | **22.23** 0.875 | **25.40** 1.000 | **25.9** 1.02 |
| 13 | **20.65** 0.812 | **23.83** 0.938 | **27.00** 1.063 | **26.7** 1.05 |
| 14 | **22.23** 0.875 | **25.40** 1.000 | **30.16** 1.189 | **27.4** 1.08 |

**Table II** (Continued)

| Entry Size | Ø Z +0.25/-0.50 [+0.010/-0.020] | Ø S ±0.51 [±0.020] | Ø Y ±0.38 [±0.015] | E Max. |
|---|---|---|---|---|
| 15 | **23.83** .0938 | **27.00** 1.062 | **31.75** 1.250 | **28.2** 1.11 |
| 16 | **25.40** 1.000 | **28.58** 1.125 | **33.34** 1.313 | **29.0** 1.14 |
| 18 | **28.58** 1.125 | **31.75** 1.250 | **36.51** 1.438 | **30.5** 1.20 |
| 20 | **31.75** 1.250 | **34.90** 1.375 | **39.69** 1.563 | N/A |
| 22 | **34.90** 1.375 | **38.10** 1.500 | **42.86** 1.688 | N/A |
| 24 | **38.10** 1.500 | **41.28** 1.625 | **46.83** 1.844 | N/A |
| 26 | **41.28** 1.625 | **44.45** 1.750 | **49.61** 1.953 | N/A |
| 28 | **44.45** 1.750 | **47.63** 1.875 | **52.78** 2.078 | N/A |
| 30 | **47.65** 1.875 | **50.80** 2.000 | **56.36** 2.219 | N/A |
| 32 | **50.80** 2.000 | **54.00** 2.125 | **59.53** 2.344 | N/A |
| 34 | **54.00** 2.125 | **57.15** 2.250 | **62.71** 2.469 | N/A |





Catalog 1654025
Revised 3-13

www.te.com

Dimensions are shown for reference purposes only. Specifications subject to change.

Dimensions are in millimeters unless otherwise specified.

USA: +1 800 522 6752
Asia Pacific: +86 0 400 820 6015
UK: +44 800 267 666

For additional support numbers please visit www.te.com

## Code 32 MIL-C-22992

### Braided Adapters

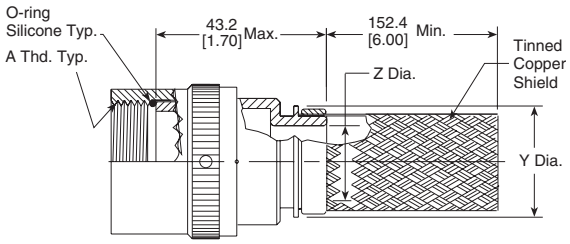


**207M3XX-XXXXX**

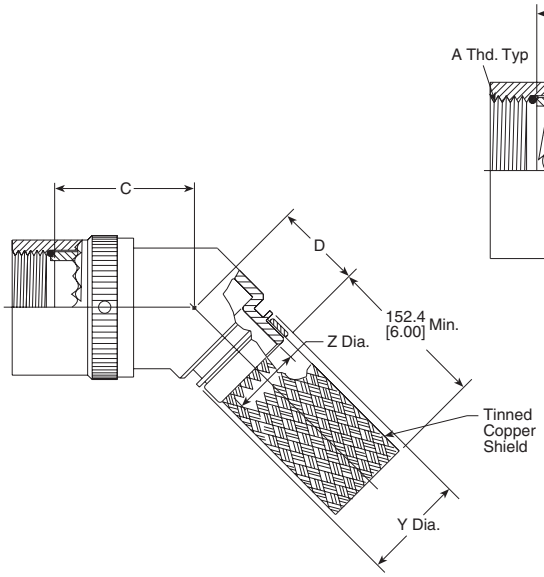


**212M4XX-XXXXX**

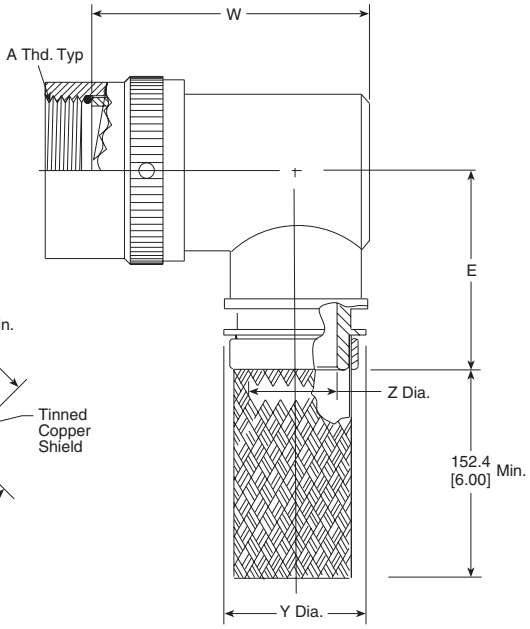


**212M5XX-XXXXX**

| Available in: | Americas | Europe | Asia Pacific |
|---|---|---|---|
| | ■ | ■ | ■ |



Catalog 1654025
Revised 3-13

www.te.com

Dimensions are shown for reference purposes only. Specifications subject to change.

Dimensions are in millimeters unless otherwise specified.

USA: +1 800 522 6752
Asia Pacific: +86 0 400 820 6015
UK: +44 800 267 666

For additional support numbers please visit www.te.com

## Code 32 MIL-C-22992 (Continued)

### Braided Adapters
(continued)

### Table of Dimensions

| Order No. | Shell Size | Max. Entry Size, Type 1* | A Left Hand Thd. Class 2B | Dimensions | | |
|---|---|---|---|---|---|---|
| | | | | C Max. | D Max. | E Max |
| 12 | 12 | 08 | .750-20 UNEF | 29.0 [1.14] | 25.4 [1.00] | 33.5 [1.32] |
| 14 | 14 | 10 | .875-20 UNEF | 29.7 [1.17] | 25.9 [1.02] | 35.3 [1.39] |
| 16 | 16 | 12 | 1.000-20 UNEF | 30.0 [1.18] | 26.2 [1.03] | 37.1 [1.46] |
| 18 | 18 | 14 | 1.125-18 UNEF | 30.7 [1.21] | 26.9 [1.06] | 38.6 [1.52] |
| 20 | 20 | 16 | 1.250-18 UNEF | 31.2 [1.23] | 27.7 [1.09] | 40.1 [1.58] |
| 22 | 22 | 18 | 1.375-18 UNEF | 32.0 [1.26] | 28.2 [1.11] | 41.7 [1.64] |
| 24 | 24 | 22 | 1.625-18 UNEF | 33.5 [1.32] | 30.0 [1.18] | 46.5 [1.83] |
| 28 | 28 | 24 | 1.875-16 UN | 34.8 [1.37] | 31.2 [1.23] | 49.8 [1.96] |
| 32 | 32 | 28 | 2.062-16 UNS | 36.3 [1.43] | 32.5 [1.28] | 52.8 [2.08] |
| 36 | 36 | 28 | 2.312-16 UNS | 37.6 [1.48] | 33.8 [1.33] | 56.1 [2.21] |
| 40 | 40 | 28 | 2.625-16 UN | 38.9 [1.53] | 35.3 [1.39] | 58.9 [2.32] |

*For larger than maximum type 1 entry sizes, a two-piece adapter will be supplied. Contact TE for information.

### Entry Size Dimensions

| Entry Size | Dimensions | | |
|---|---|---|---|
| | Z ± 0.20 (± 0.51) | Y Dia. Min. | W Max. |
| 03 | 4.75 [.187] | 9.98 [.393] | 39.6 [1.56] |
| 04 | 6.35 [.250] | 11.58 [.456] | 39.6 [1.56] |
| 05 | 7.92 [.312] | 13.08 [.515] | 42.9 [1.69] |
| 06 | 9.53 [.375] | 14.76 [.581] | 42.9 [1.69] |
| 07 | 11.13 [.438] | 16.33 [.643] | 46.0 [1.81] |
| 08 | 12.70 [.500] | 17.91 [.705] | — |
| 09 | 14.27 [.562] | 17.91 [.705] | 49.3 [1.94] |
| 10 | 15.88 [.625] | 21.11 [.831] | 49.3 [1.94] |
| 11 | 17.48 [.688] | 22.68 [.893] | 52.3 [2.06] |
| 12 | 19.05 [.750] | 24.21 [.953] | 52.3 [2.06] |
| 13 | 20.62 [.812] | 24.21 [.953] | 55.6 [2.19] |
| 14 | 22.23 [.875] | 27.46 [1.081] | 55.6 [2.19] |
| 15 | 23.83 [.938] | 29.03 [1.143] | 59.9 [2.36] |
| 16 | 25.40 [1.000] | 30.61 [1.205] | 59.9 [2.36] |
| 18 | 28.58 [1.125] | 35.08 [1.381] | 69.6 [2.74] |
| 20 | 31.75 [1.250] | 38.25 [1.506] | 72.6 [2.86] |
| 22 | 34.93 [1.375] | 41.43 [1.631] | 75.9 [2.99] |
| 24 | 38.10 [1.500] | 44.60 [1.756] | 79.0 [3.11] |
| 28 | 44.45 [1.750] | 50.90 [2.004] | 85.3 [3.36] |





Catalog 1654025
Revised 3-13

www.te.com

Dimensions are shown for reference purposes only. Specifications subject to change.

Dimensions are in millimeters unless otherwise specified.

USA: +1 800 522 6752
Asia Pacific: +86 0 400 820 6015
UK: +44 800 267 666

For additional support numbers please visit www.te.com

## Code 32 MIL-C-22992 (Continued)

### Spin-Coupling Adapters

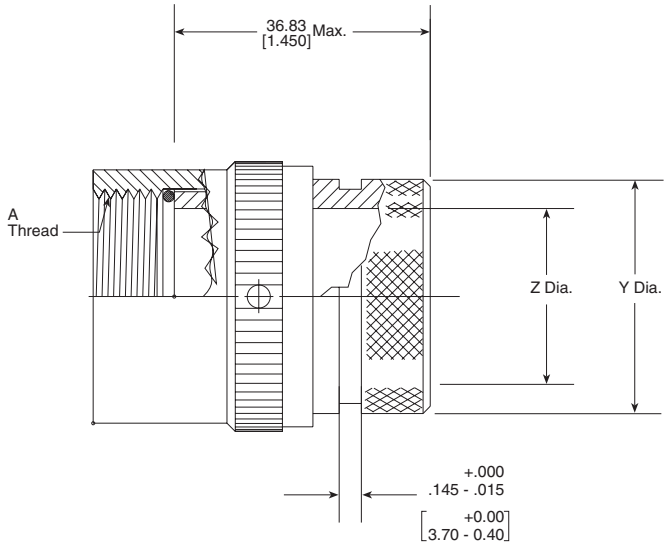


**204M3XX-XXX**

### Table of Dimensions

| Base Part Number | Shell Size | A L.H. Thread Class 2B | Dimensions Y ± .020 (±0.51) | Dimensions Z Min. |
|---|---|---|---|---|
| 12 | 12 | .750-20 UNEF | 20.24 [.797] | 12.47 [.491] |
| 14 | 14 | .875-20 UNEF | 23.44 [.923] | 14.35 [.565] |
| 16 | 16 | 1.000-20 UNEF | 26.42 [1.040] | 17.53 [.690] |
| 18 | 18 | 1.125-18 UNEF | 31.17 [1.227] | 18.19 [.716] |
| 20 | 20 | 1.250-18 UNEF | 34.49 [1.358] | 21.72 [.855] |
| 22 | 22 | 1.375-18 UNEF | 37.21 [1.465] | 25.02 [.985] |
| 24 | 24 | 1.625-18 UNEF | 42.82 [1.686] | 30.48 [1.200] |
| 28 | 28 | 1.875-16 UN | 50.06 [1.971] | 36.58 [1.440] |
| 32 | 32 | 2.062-16 UNS | 55.35 [2.179] | 40.77 [1.605] |
| 36 | 36 | 2.312-16 UNEF | 61.01 [2.402] | 52.96 [2.085] |
| 40 | 40 | 2.625-16 UNS | 67.46 [2.656] | 57.15 [2.250] |
| 44 | 44 | 2.875-16 UNS | 70.66 [2.782] | 62.46 [2.549] |

*For larger than maximum type 1 entry sizes, a two-piece adapter will be supplied. Contact TE for information.

### Molded Part Size Selection Guide (Spin-Coupling)

| Order No. | Standard K Parts Straight Part No. | Standard K Parts 90° Part No. | Standard K Parts Cable OD (Min.) | Low-profile D Parts Straight Part No. | Low-profile D Parts 90° Part No. | Low-profile D Parts Cable OD (Min.) |
|---|---|---|---|---|---|---|
| 12 | 202K142 | 222K142 | 7.1 [0.28] | 202D232 | 222D232 | 8.4 [0.33] |
| 14, 16 | 202K153 | 222K152 | 8.4 [0.33] | 202D242 | 222D242 | 9.7 [0.38] |
| 18, 20 | 202K163 | 222K163 | 9.9 [0.39] | 202D253 | 222D253 | 10.5 [0.41] |
| 22, 24 | 202K174 | 222K174 | 15.7 [0.62] | 202D263 | 222D263 | 12.2 [0.48] |
| 26, 32, 36 | 202K185 | 222K185 | 16.8 [0.66] | — | — | — |

### Uniboot Parts

| Order No. | Part No. | Cable OD (Min.) |
|---|---|---|
| 12 | 202C632 | 12.7 [0.50] |
| 14, 16 | 202C642 | 17.5 [0.69] |
| 18, 20, 22, 24 | 202C653 | 22.4 [0.88] |

| Available in: | Americas | Europe | Asia Pacific |
|---|---|---|---|
| | ■ | ■ | ■ |



Catalog 1654025
Revised 3-13

www.te.com

Dimensions are shown for reference purposes only. Specifications subject to change.

Dimensions are in millimeters unless otherwise specified.

USA: +1 800 522 6752
Asia Pacific: +86 0 400 820 6015
UK: +44 800 267 666

For additional support numbers please visit www.te.com

## Code 32 MIL-C-22992 (Continued)

### Tinel-Lock Adapters

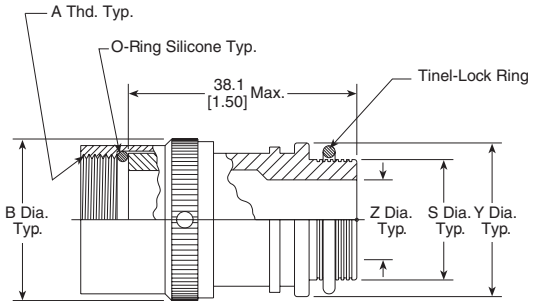


**TXR32XX00-XXXXXX**

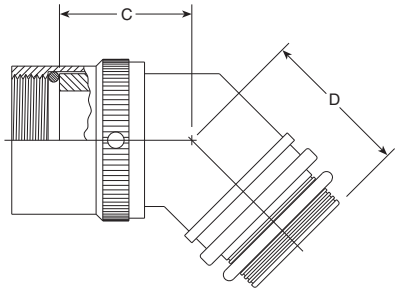


**TXR32XX45-XXXXXX**

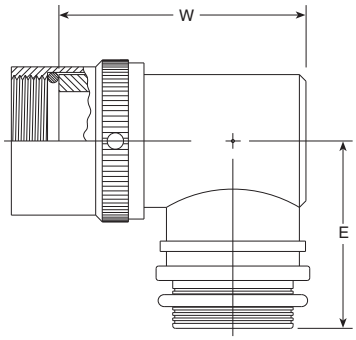


**TXR32XX90-XXXXXX**

| Order No. | Shell Size | Max. Entry Size Type I | Dimensions | | | | | | | |
|---|---|---|---|---|---|---|---|---|---|---|
| | | | A Left Hand Thd Class 2B | C Max. | D Max. | E Max. | Z +.010 -.020 | S Dia. | Y ± .015 (± 0.38) | W Max. |
| 12 | 12 | 08 | .750-20 UNEF | 29.0 [1.14] | 25.4 [1.00] | 33.5 [1.32] | 19.05 [.750] | 22.28 [.877] / 22.02 [.867] | 26.67 [1.050] | 52.3 [2.06] |
| 14 | 14 | 10 | .875-20 UNEF | 29.7 [1.17] | 25.9 [1.02] | 35.3 [1.39] | 22.23 [.875] | 25.46 [1.002] / 25.17 [.991] | 29.84 [1.175] | 55.6 [2.19] |
| 16 | 16 | 12 | 1.000-20 UNEF | 30.0 [1.18] | 26.2 [1.03] | 37.1 [1.46] | 25.40 [1.000] | 28.63 [1.127] / 28.34 [1.116] | 33.02 [1.300] | 59.01 [2.36] |
| 18 | 18 | 14 | 1.125-18 UNEF | 30.7 [1.21] | 26.9 [1.06] | 38.6 [1.52] | 28.57 [1.125] | 31.81 [1.252] / 31.52 [1.241] | 36.19 [1.425] | 69.6 [2.74] |
| 20 | 20 | 16 | 1.250-18 UNEF | 31.2 [1.23] | 27.7 [1.09] | 40.1 [1.58] | 31.75 [1.250] | 34.98 [1.377] / 34.69 [1.366] | 39..37 [1.550] | 72.6 [2.86] |
| 22 | 22 | 18 | 1.375-18 UNEF | 32.0 [1.26] | 28.2 [1.11] | 41.7 [1.64] | 34.93 [1.375] | 38.15 [1.502] / 37.79 [1.488] | 42.55 [1.675] | 75.9 [2.99] |
| 24 | 24 | 22 | 1.625-18 UNEF | 33.5 [1.32] | 30.0 [1.18] | 46.5 [1.83] | 38.10 [1.500] | 41.33 [1.627] / 40.97 [1.613] | 45.72 [1.800] | 79.0 [3.11] |
| 28 | 28 | 24 | 1.875-16 UN | 34.8 [1.37] | 31.2 [1.23] | 49.8 [1.96] | — | — | — | — |
| 32 | 32 | 24 | 2.062-16 UNS | 36.3 [1.43] | 32.5 [1.28] | 52.8 [2.08] | — | — | — | — |
| 36 | 36 | 24 | 2.312-16 UNS | 37.6 [1.48] | 33.8 [1.33] | 56.1 [2.21] | — | — | — | — |
| 40 | 40 | 24 | 2.625-16 UN | 38.9 [1.53] | 35.3 [1.39] | 58.9 [2.32] | — | — | — | — |

**For larger than maximum type 1 entry sizes, a two-piece adapter will be supplied. Contact TE for information.

| Available in: | Americas | Europe | Asia Pacific |
|---|---|---|---|
| | ■ | ■ | ■ |





Catalog 1654025
Revised 3-13

www.te.com

Dimensions are shown for reference purposes only. Specifications subject to change.

Dimensions are in millimeters unless otherwise specified.

USA: +1 800 522 6752
Asia Pacific: +86 0 400 820 6015
UK: +44 800 267 666

For additional support numbers please visit www.te.com

## Code 32 MIL-C-22992 (Continued)

### CRES-Lock Adapters (USA)
### BND Adapters (Europe)

### Code 32 Band Strap Adapter

**Notes:**
1. This product is designed to terminate a braided cable shield by means of a band strap and a heat shrinkable lipped boot to a connector.
2. See CH00-0250-016 for ordering information, modifications and additional dimensions.
3. See drawing BND-XX25S for band strap dimensions and information.
4. Adapter to be permanently marked with code identification number and full part number (e.g. 06090-BND32AB00-1812). Band strap shall bear no part marking.
5. All entry sizes are shown in Table II. Maximum entry sizes are as shown in Table I. For larger entry sizes than the maximum, a Type II adapter may be supplied. See CH00-0250-016 for further details.
6. Adapter mates to: MIL-C-22992, Class C and R, MS17343, 44, 45 and 47 Connectors.
7. Anti-rotational set screw, 3 threaded holes 120° ± 5° apart, single mating set screw supplied: AN565DC4H2. Not required for Type II adapters.

**For additional codes available, contact TE.**

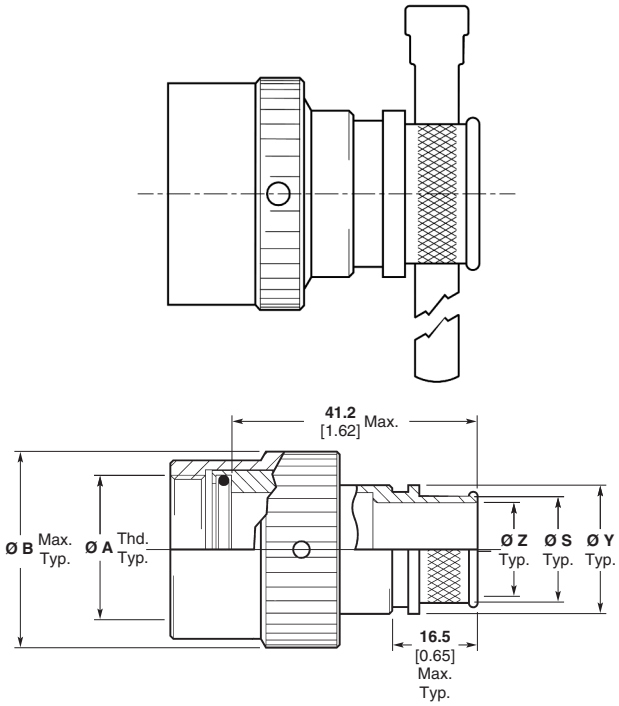


**Straight Adapter**
**Code 00**

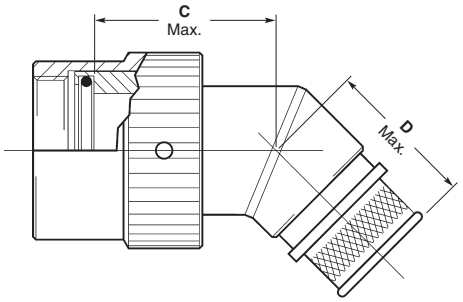


**45° Adapter**
**Code 45**

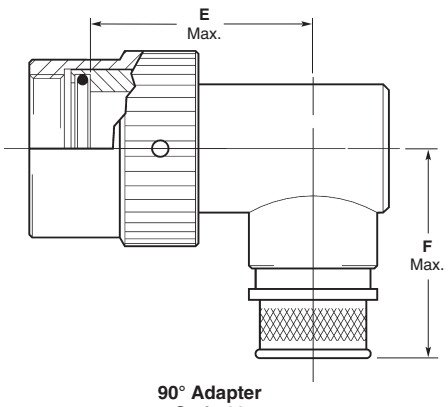


**90° Adapter**
**Code 90**

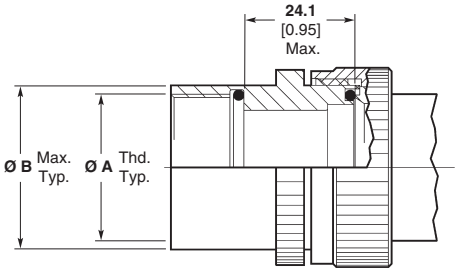


**Type II Modification**
**(See Note 5)**

| Available in: | Americas | Europe | Asia Pacific |
|---|---|---|---|
| | ■ | ■ | ■ |



Catalog 1654025
Revised 3-13

www.te.com

Dimensions are shown for reference purposes only. Specifications subject to change.

Dimensions are in millimeters unless otherwise specified.

USA: +1 800 522 6752
Asia Pacific: +86 0 400 820 6015
UK: +44 800 267 666

For additional support numbers please visit www.te.com

## Code 32 MIL-C-22992 (Continued)

### CRES-Lock Adapters (USA) BND Adapters (Europe) (continued)

### Code 32 Band Strap Adapter (Continued)

**Table I**

| Order Number | Shell Size[2] | Entry Size Max. Type I[1] | Ø A Unified Thread Class 2B | Ø B Max. | C Max. | D Max. | F Max. |
|---|---|---|---|---|---|---|---|
| 12 | 12 | 08 | 0.7500–20 UNEF | **27.2** 1.07 | **29.0** 1.14 | **28.4** 1.12 | **36.6** 1.44 |
| 14 | 14 | 10 | 0.8750–20 UNEF | **30.2** 1.19 | **29.7** 1.17 | **28.9** 1.14 | **38.4** 1.51 |
| 16 | 16 | 12 | 1.0000–20 UNEF | **33.5** 1.32 | **30.0** 1.18 | **29.2** 1.15 | **40.1** 1.58 |
| 18 | 18 | 14 | 1.1250–18 UNEF | **36.6** 1.44 | **30.7** 1.21 | **30.0** 1.18 | **41.7** 1.64 |
| 20 | 20 | 16 | 1.2500–18 UNEF | **39.9** 1.57 | **31.2** 1.23 | **30.7** 1.21 | **43.2** 1.70 |
| 22 | 22 | 18 | 1.3750–18 UNEF | **42.9** 1.69 | **32.0** 1.26 | **31.2** 1.23 | **44.7** 1.76 |
| 24 | 24 | 22 | 1.6250–18 UNEF | **52.6** 2.07 | **33.5** 1.32 | **33.0** 1.30 | **49.5** 1.95 |
| 28 | 28 | 26 | 1.8750–16 UN | **58.9** 2.32 | **34.8** 1.37 | **34.3** 1.35 | **52.8** 2.08 |
| 32 | 32 | 30 | 2.0625–16 UNS | **65.3** 2.57 | **36.3** 1.43 | **35.6** 1.40 | **55.9** 2.20 |
| 36 | 36 | 34 | 2.3125–16 UNS | **71.6** 2.82 | **37.6** 1.48 | **36.8** 1.45 | **59.2** 2.33 |
| 40 | 40 | 34 | 2.6250–16 UN | **78.0** 3.07 | **38.9** 1.53 | **38.4** 1.51 | **62.0** 2.44 |

1. All entry sizes are shown in Table II. Maximum entry sizes are as shown in Table I. For larger entry sizes than the maximum, a Type II adapter may be supplied. See CH00-0250-016 for further details.
2. Adapter mates to: MIL-C-22992, Class C and R, MS17343, 44, 45 and 47 Connectors.

**Table II**

| Entry Size | Ø Z +0.25/-0.50 [+0.010/-0.020] | Ø S ±0.51 [±0.020] | Ø Y ±0.38 [±0.015] | E Max. |
|---|---|---|---|---|
| 03 | **4.75** 0.188 | **7.92** 0.312 | **11.10** 0.438 | **28.3** 1.12 |
| 04 | **6.35** 0.250 | **9.52** 0.375 | **12.70** 0.500 | **29.3** 1.15 |
| 05 | **7.92** 0.312 | **11.12** 0.438 | **14.30** 0.563 | **30.0** 1.18 |
| 06 | **9.52** 0.375 | **12.70** 0.500 | **15.88** 0.625 | **30.8** 1.21 |
| 07 | **11.12** 0.438 | **14.30** 0.562 | **17.50** 0.689 | **31.5** 1.24 |
| 08 | **12.70** 0.500 | **15.88** 0.625 | **19.05** 0.750 | **32.3** 1.27 |
| 09 | **14.30** 0.562 | **17.50** 0.688 | **20.65** 0.813 | **33.3** 1.31 |
| 10 | **15.88** 0.625 | **19.05** 0.750 | **22.23** 0.875 | **34.0** 1.34 |
| 11 | **17.50** 0.688 | **20.65** 0.812 | **23.80** 0.938 | **35.0** 1.38 |
| 12 | **19.05** 0.750 | **22.23** 0.875 | **25.40** 1.000 | **35.8** 1.41 |
| 13 | **20.65** 0.812 | **23.83** 0.938 | **27.00** 1.063 | **36.0** 1.42 |
| 14 | **22.23** 0.875 | **25.40** 1.000 | **30.16** 1.189 | **37.5** 1.48 |

**Table II** (Continued)

| Entry Size | Ø Z +0.25/-0.50 [+0.010/-0.020] | Ø S ±0.51 [±0.020] | Ø Y ±0.38 [±0.015] | E Max. |
|---|---|---|---|---|
| 15 | **23.83** .0938 | **27.00** 1.062 | **31.75** 1.250 | **37.8** 1.49 |
| 16 | **25.40** 1.000 | **28.58** 1.125 | **33.34** 1.313 | **38.3** 1.51 |
| 18 | **28.58** 1.125 | **31.75** 1.250 | **36.51** 1.438 | **39.8** 1.57 |
| 20 | **31.75** 1.250 | **34.90** 1.375 | **39.69** 1.563 | **41.3** 1.63 |
| 22 | **34.90** 1.375 | **38.10** 1.500 | **42.86** 1.688 | **43.0** 1.69 |
| 24 | **38.10** 1.500 | **41.28** 1.625 | **46.83** 1.844 | **44.5** 1.75 |
| 26 | **41.28** 1.625 | **44.45** 1.750 | **49.61** 1.953 | **46.3** 1.82 |
| 28 | **44.45** 1.750 | **47.63** 1.875 | **52.78** 2.078 | **48.3** 1.90 |
| 30 | **47.65** 1.875 | **50.80** 2.000 | **56.36** 2.219 | **50.0** 1.97 |
| 32 | **50.80** 2.000 | **54.00** 2.125 | **59.53** 2.344 | **51.5** 2.03 |
| 34 | **54.00** 2.125 | **57.15** 2.250 | **62.71** 2.469 | **53.3** 2.10 |





Catalog 1654025
Revised 3-13

www.te.com

Dimensions are shown for reference purposes only. Specifications subject to change.

Dimensions are in millimeters unless otherwise specified.

USA: +1 800 522 6752
Asia Pacific: +86 0 400 820 6015
UK: +44 800 267 666

For additional support numbers please visit www.te.com

## Code 40 MIL-C-38999 Series III and IV

### Braided Adapters

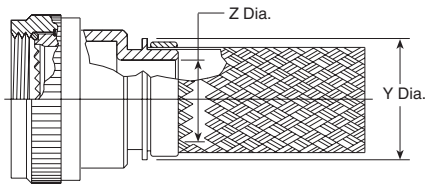


**208M7XX-XXXXX**

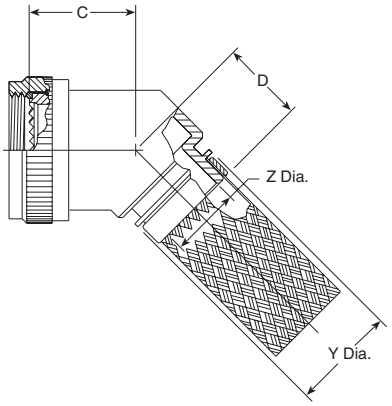


**208M8XX-XXXXX**

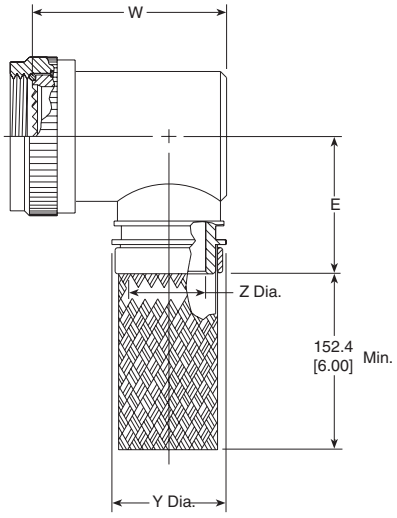


**208M9XX-XXXXX**

### Table of Dimensions

| Order No. | Shell Size Commercial | Military | Max. Entry* Size Type 1 | Thread | Dimensions | | |
|---|---|---|---|---|---|---|---|
| | | | | | C Max. | D Max. | E Max. |
| 08 | 9 | A | 04 | M12 x 1.0 | 20.8 [0.82] | 22.6 [0.89] | 29.2 [1.15] |
| 10 | 11 | B | 07 | M15 x 1.0 | 21.3 [0.84] | 23.4 [0.92] | 30.7 [1.21] |
| 12 | 13 | C | 09 | M18 x 1.0 | 22.1 [0.87] | 24.1 [0.95] | 32.5 [1.28] |
| 14 | 15 | D | 10 | M2 x 1.0 | 22.6 [0.89] | 24.1 [0.95] | 34.0 [1.34] |
| 16 | 17 | E | 12 | M25 x 1.0 | 23.4 [0.92] | 24.9 [0.98] | 35.6 [1.40] |
| 18 | 19 | F | 14 | M28 x 1.0 | 24.1 [0.95] | 25.7 [1.01] | 37.1 [1.46] |
| 20 | 21 | G | 16 | M31 x 1.0 | 24.6 [0.97] | 26.4 [1.04] | 38.9 [1.53] |
| 22 | 23 | H | 18 | M34 x 1.0 | 25.4 [1.00] | 27.2 [1.07] | 40.4 [1.59] |
| 24 | 25 | J | 20 | M37 x 1.0 | 25.9 [1.02] | 27.2 [1.07] | 42.4 [1.67] |

*For larger than maximum type 1 entry sizes, a two-piece adapter will be supplied. Contact TE for information.

| Available in: | Americas | Europe | Asia Pacific |
|---|---|---|---|
| | ■ | ■ | ■ |



Catalog 1654025
Revised 3-13

www.te.com

Dimensions are shown for reference purposes only. Specifications subject to change.

Dimensions are in millimeters unless otherwise specified.

USA: +1 800 522 6752
Asia Pacific: +86 0 400 820 6015
UK: +44 800 267 666

For additional support numbers please visit www.te.com

## Code 40 MIL-C-38999 Series III and IV (Continued)

### Braided Adapters
(continued)

### Entry Size Dimensions

| Entry Size | Dimensions | | |
|---|---|---|---|
| | Z +0.25–0.5 | Y Dia. | W Max. |
| 04 | 6.35 [0.25] | 13.97 [0.55] | 31.2 [1.23] |
| 05 | 7.92 [0.31] | 15.54 [0.61] | 32.8 [1.29] |
| 06 | 9.52 [0.37] | 17.14 [0.67] | 34.3 [1.35] |
| 07 | 11.09 [0.44] | 18.71 [0.74] | 36.1 [1.42] |
| 08 | 12.7 [0.50] | 20.32 [0.80] | 37.6 [1.48] |
| 10 | 15.87 [0.62] | 23.49 [0.92] | 40.6 [1.60] |
| 12 | 19.05 [0.75] | 26.67 [1.05] | 43.9 [1.73] |
| 14 | 22.23 [0.88] | 29.84 [1.17] | 47.0 [1.85] |
| 16 | 25.4 [1.00] | 33.02 [1.30] | 50.8 [2.00] |
| 18 | 28.57 [1.12] | 36.19 [1.42] | 54.1 [2.13] |
| 20 | 31.75 [1.25] | 39.37 [1.55] | 57.21 [2.25] |

### Molded Part Selection Guide (Braided)

| Tinel-Lock Entry Size | Standard K Parts | | | Low-Profile D Parts | | |
|---|---|---|---|---|---|---|
| | Straight Part No. | 90° Part No. | Cable OD (Min.) | Straight Part No. | 90° Part No. | Cable OD (Min.) |
| 04 | 202K232 | — | 3.3 [0.1] | — | — | — |
| 04 | 202W232 | — | 4.3 [0.2] | — | — | — |
| 04 | 202K121 | 222K121 | 5.6 [0.2] | 202D211 | 222D211 | 6.4 [0.3] |
| 05, 06 | 202K132 | 222K132 | 5.9 [0.2] | 202D221 | 222D221 | 7.4 [0.3] |
| 07, 08 | 202K142 | 222K142 | 7.1 [0.3] | 202D232 | 222D232 | 8.4 [0.3] |
| 10, 12 | 202K153 | 222K152 | 8.4 [0.3] | 202D242 | 222D242 | 9.7 [0.4] |
| 14, 16 | 202K163 | 222K163 | 9.9 [0.4] | 202D253 | 222D253 | 10.5 [0.4] |
| 18, 20, 22 | 202K174 | 222K174 | 15.7 [0.6] | 202D263 | 222D263 | 12.2 [0.5] |
| 24 | 202K185 | 222K185 | 16.8 [0.7] | — | — | — |

### Uniboot Parts

| Tinel- Lock Entry Size | Part No. | Cable OD (Min.) |
|---|---|---|
| 04 | 202C611 | 4.8 [0.19] |
| 05, 06, 07 | 202C621 | 8.1 [0.32] |
| 08, 10, 12 | 202C632 | 12.7 [0.50] |
| 12, 14, 16 | 202C642 | 17.5 [0.69] |
| 16, 18, 20, 22 | 202C653 | 22.4 [0.88] |
| 24 | 202C663 | 22.9 [0.90] |





Catalog 1654025
Revised 3-13

www.te.com

Dimensions are shown for reference purposes only. Specifications subject to change.

Dimensions are in millimeters unless otherwise specified.

USA: +1 800 522 6752
Asia Pacific: +86 0 400 820 6015
UK: +44 800 267 666

For additional support numbers please visit www.te.com

## Code 40 MIL-C-38999 Series III and IV (Continued)

### Solid Adapters

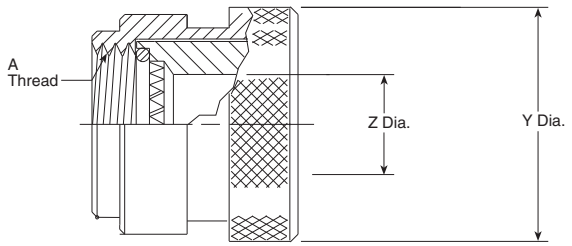


209M3XX-XXX

### Table of Dimensions

| Order No. | Shell Size Commercial | Military | A Thread | Dimensions | |
|---|---|---|---|---|---|
| | | | | Y +.000- .030 (+0.00) (–0.76) | Z Dia. Min. |
| 08 | 9 | A | M12 x 1.0 | 18.26 [.719] | 6.35 [.250] |
| 10 | 11 | B | M15 x 1.0 | 21.44 [.844] | 9.52 [.375] |
| 12 | 13 | C | M18 x 1.0 | 24.61 [.969] | 12.70 [.500] |
| 14 | 15 | D | M22 x 1.0 | 30.91 [1.217] | 15.88 [.625] |
| 16 | 17 | E | M25 x 1.0 | 34.40 [1.354] | 19.05 [.750] |
| 18 | 19 | F | M28 x 1.0 | 37.50 [1.476] | 20.62 [.812] |
| 20 | 21 | G | M31 x 1.0 | 38.89 [1.531] | 23.80 [.937] |
| 22 | 23 | H | M34 x 1.0 | 42.06 [1.656] | 26.97 [1.062] |
| 24 | 25 | J | M37 x 1.0 | 45.24 [1.781] | 30.18 [1.188] |

### Molded Part Selection Guide (Solid)

| Order No. | Standard K Parts | | | Low-Profile D Parts | | |
|---|---|---|---|---|---|---|
| | Straight Part No. | 90° Part No. | Cable OD (Min.) | Straight Part No. | 90° Part No. | Cable OD (Min.) |
| 08 | 202K132 | 222K132 | 5.9 [0.23] | 202D221 | 222D221 | 7.4 [0.29] |
| 10 | 202K142 | 222K142 | 7.1 [0.28] | 202D232 | 222D232 | 8.4 [0.33] |
| 12, 14 | 202K153 | 222K152 | 8.4 [0.33] | 202D242 | 222D242 | 9.7 [0.38] |
| 16, 18 | 202K163 | 222K163 | 9.9 [0.39] | 202D253 | 222D253 | 10.5 [0.41] |
| 20, 22, 24 | 202K174 | 222K174 | 15.7 [0.62] | 202D263 | 222D263 | 12.2 [0.48] |

### Uniboot Parts

| Order No. | Part No. | Cable OD (Min.) |
|---|---|---|
| 08 | 202C621 | 8.1 [0.32] |
| 10 | 202C632 | 12.7 [0.50] |
| 12, 14 | 202C642 | 17.5 [0.69] |
| 16, 18, 20, 22 | 202C653 | 22.4 [0.88] |

| Available in: | Americas | Europe | Asia Pacific |
|---|---|---|---|
| | ■ | ■ | ■ |



Catalog 1654025
Revised 3-13

www.te.com

Dimensions are shown for reference purposes only. Specifications subject to change.

Dimensions are in millimeters unless otherwise specified.

USA: +1 800 522 6752
Asia Pacific: +86 0 400 820 6015
UK: +44 800 267 666

For additional support numbers please visit www.te.com

## Code 40 MIL-C-38999 Series III and IV (Continued)

### Spin-Coupling Adapters

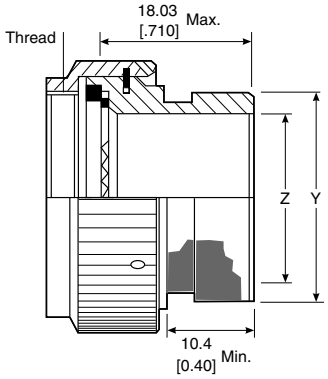


**209M4XX-XXX**

### Table of Dimensions

| Order No. | Shell Size Commercial | Military | Thread | Dimensions | |
|---|---|---|---|---|---|
| | | | | Y Dia. Max. | Z Dia. Max. |
| 08 | 9 | A | M12 x 1.0 | 13.54 [0.53] | 6.35 [0.25] |
| 10 | 11 | B | M15 x 1.0 | 15.37 [0.61] | 9.52 [0.37] |
| 12 | 13 | C | M18 x 1.0 | 19.66 [0.77] | 12.7 [0.50] |
| 14 | 15 | D | M22 x 1.0 | 21.29 [0.84] | 15.75 [0.62] |
| 16 | 17 | E | M25 x 1.0 | 24.46 [0.96] | 18.92 [0.74] |
| 18 | 19 | F | M28 x 1.0 | 26.47 [1.04] | 20.62 [0.81] |
| 20 | 21 | G | M31 x 1.0 | 30.91 [1.22] | 23.8 [0.94] |
| 22 | 23 | H | M34 x 1.0 | 34.42 [1.36] | 26.97 [1.06] |
| 24 | 25 | J | M37 x 1.0 | 36.65 [1.44] | 29.85 [1.18] |

### Molded Part Selection Guide (Spin-Coupling)

| Order No. | Standard K Parts | | | Low-Profile D Parts | | |
|---|---|---|---|---|---|---|
| | Straight Part No. | 90° Part No. | Cable OD (Min.) | Straight Part No. | 90° Part No. | Cable OD (Min.) |
| 03, 08 | 202W232 | — | 4.3 [0.19] | — | — | — |
| 03, 08 | 202K121 | 222K121 | 5.6 [0.22] | 202D211 | 222D211 | 6.4 [0.25] |
| 10, 11 | 202K132 | 222K132 | 5.9 [0.23] | 202D221 | 222D221 | 7.4 [0.29] |
| 12, 14 | 202K142 | 222K142 | 7.1 [0.28] | 202D232 | 222D232 | 8.4 [0.33] |
| 16, 18 | 202K153 | 222K152 | 8.4 [0.33] | 202D242 | 222D242 | 9.7 [0.38] |
| 20, 22 | 202K163 | 222K163 | 9.9 [0.39] | 202D253 | 222D253 | 10.5 [0.41] |
| 24, 28 | 202K174 | 222K174 | 15.7 [0.62] | 202D263 | 222D263 | 12.2 [0.48] |
| 32, 36 | 202K185 | 222K185 | 16.8 [0.66] | — | — | — |

### Uniboot Parts

| Order No. | Part No. | Cable OD (Min.) |
|---|---|---|
| 03, 08 | 202C611 | 4.8 [0.19] |
| 10, 11, 12 | 202C621 | 8.1 [0.32] |
| 14, 16 | 202C632 | 12.7 [0.50] |
| 18, 20 | 202C642 | 17.5 [0.69] |
| 22, 24 | 202C653 | 22.4 [0.88] |

| Available in: | Americas | Europe | Asia Pacific |
|---|---|---|---|
| | ■ | ■ | ■ |





Catalog 1654025
Revised 3-13

www.te.com

Dimensions are shown for reference purposes only. Specifications subject to change.

Dimensions are in millimeters unless otherwise specified.

USA: +1 800 522 6752
Asia Pacific: +86 0 400 820 6015
UK: +44 800 267 666

For additional support numbers please visit www.te.com

## Code 40 MIL-C-38999 Series III and IV (Continued)

### Tinel-Lock Adapters

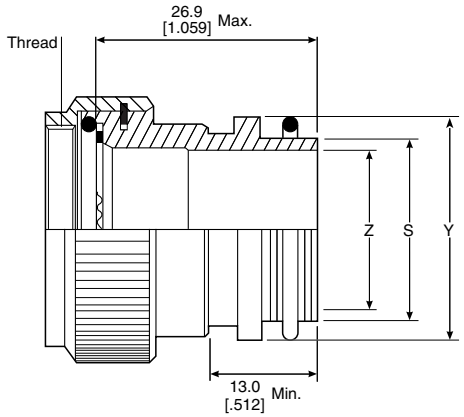


**TXR40XX00-XXXXXX**

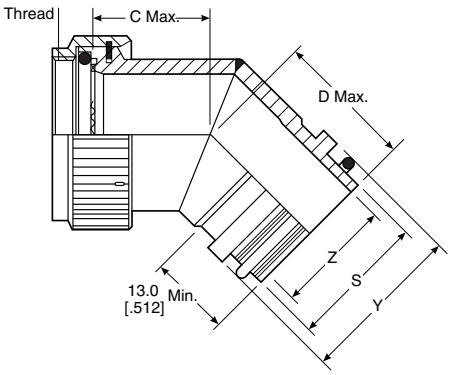


**TXR40XX45-XXXXXX**

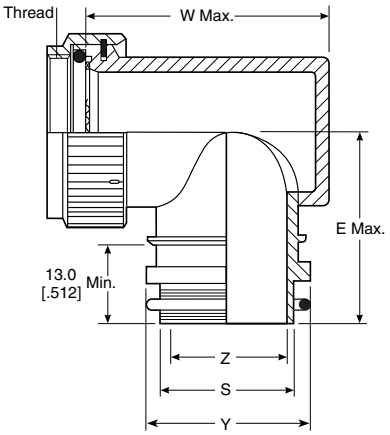


**TXR40XX90-XXXXXX**

### Table of Dimensions

| Order No. | Shell Size Commercial | Military | Max. Entry* Size Type 1 | Thread | Dimensions | | |
|---|---|---|---|---|---|---|---|
| | | | | | C Max. | D Max. | E Max. |
| 08 | 9 | A | 04 | M12 x 1.0 | 20.8 [0.82] | 22.6 [0.89] | 27.9 [1.10] |
| 10 | 11 | B | 07 | M15 x 1.0 | 21.3 [0.84] | 23.4 [0.92] | 30.5 [1.20] |
| 12 | 13 | C | 08 | M18 x 1.0 | 22.1 [0.87] | 24.1 [0.95] | 32.0 [1.26] |
| 14 | 15 | D | 10 | M2 x 1.0 | 22.6 [0.89] | 24.1 [0.95] | 34.0 [1.34] |
| 16 | 17 | E | 12 | M25 x 1.0 | 23.4 [0.92] | 24.9 [0.98] | 35.6 [1.40] |
| 18 | 19 | F | 14 | M28 x 1.0 | 24.1 [0.95] | 25.7 [1.01] | 36.8 [1.45] |
| 20 | 21 | G | 16 | M31 x 1.0 | 24.6 [0.97] | 26.4 [1.04] | 38.4 [1.51] |
| 22 | 23 | H | 18 | M34 x 1.0 | 25.4 [1.00] | 27.2 [1.07] | 39.9 [1.57] |
| 24 | 25 | J | 20 | M37 x 1.0 | 25.9 [1.02] | 27.2 [1.07] | 42.4 [1.67] |

*For larger than maximum type 1 entry sizes, a two-piece adapter will be supplied. Contact TE for information.

| Available in: | Americas | Europe | Asia Pacific |
|---|---|---|---|
| | ■ | ■ | ■ |



Catalog 1654025
Revised 3-13

www.te.com

Dimensions are shown for reference purposes only. Specifications subject to change.

Dimensions are in millimeters unless otherwise specified.

USA: +1 800 522 6752
Asia Pacific: +86 0 400 820 6015
UK: +44 800 267 666

For additional support numbers please visit www.te.com

## Code 40 MIL-C-38999 Series III and IV (Continued)

### Tinel-Lock Adapters
(continued)

### Entry Size Dimensions

| Entry Size | Dimensions | | | |
|---|---|---|---|---|
| | Z +0.25–0.5 | S Diameter (Min.–Max.) | Y Dia. | W Max. |
| 04 | 6.35 [0.25] | 9.39–9.56 [0.37–0.38] | 13.97 [0.55] | 31.2 [1.23] |
| 05 | 7.92 [0.31] | 10.97–11.13 [0.43–0.44] | 15.54 [0.61] | 32.8 [1.29] |
| 06 | 9.52 [0.37] | 12.57–12.73 [0.49–0.50] | 17.14 [0.67] | 34.3 [1.35] |
| 07 | 11.09 [0.44] | 14.12–14.31 [0.55–0.56] | 18.71 [0.74] | 36.1 [1.42] |
| 08 | 12.7 [0.50] | 15.72–15.91 [0.62–0.63] | 20.32 [0.80] | 37.6 [1.48] |
| 10 | 15.87 [0.62] | 18.84–19.11 [0.74–0.75] | 23.49 [0.92] | 40.6 [1.60] |
| 12 | 19.05 [0.75] | 22.02–22.28 [0.87–0.88] | 26.67 [1.05] | 43.9 [1.73] |
| 14 | 22.23 [0.88] | 25.17–25.46 [0.99–1.00] | 29.84 [1.17] | 47.0 [1.85] |
| 16 | 25.4 [1.00] | 28.34–28.63 [1.12–1.13] | 33.02 [1.30] | 50.8 [2.00] |
| 18 | 28.57 [1.12] | 31.52–31.81 [1.24–1.25] | 36.19 [1.42] | 54.1 [2.13] |
| 20 | 31.75 [1.25] | 34.69–34.98 [1.37–1.38] | 39.37 [1.55] | 57.21 [2.25] |

### Molded Part Selection Guide (Tinel)

| Tinel-Lock Entry Size | Standard K Parts | | | Low-Profile D Parts | | |
|---|---|---|---|---|---|---|
| | Straight Part No. | 90° Part No. | Cable OD (Min.) | Straight Part No. | 90° Part No. | Cable OD (Min.) |
| 04 | 202K232 | — | 3.3 [0.1] | — | — | — |
| 04 | 202W232 | — | 4.3 [0.2] | — | — | — |
| 04 | 202K121 | 222K121 | 5.6 [0.2] | 202D211 | 222D211 | 6.4 [0.3] |
| 05, 06 | 202K132 | 222K132 | 5.9 [0.2] | 202D221 | 222D221 | 7.4 [0.3] |
| 07, 08 | 202K142 | 222K142 | 7.1 [0.3] | 202D232 | 222D232 | 8.4 [0.3] |
| 10, 12 | 202K153 | 222K152 | 8.4 [0.3] | 202D242 | 222D242 | 9.7 [0.4] |
| 14, 16 | 202K163 | 222K163 | 9.9 [0.4] | 202D253 | 222D253 | 10.5 [0.4] |
| 18, 20, 22 | 202K174 | 222K174 | 15.7 [0.6] | 202D263 | 222D263 | 12.2 [0.5] |
| 24 | 202K185 | 222K185 | 16.8 [0.7] | — | — | — |

### Uniboot Parts

| Tinel-Lock Entry Size | Part No. | Cable OD (Min.) |
|---|---|---|
| 04 | 202C611 | 4.8 [0.19] |
| 05, 06, 07 | 202C621 | 8.1 [0.32] |
| 08, 10, 12 | 202C632 | 12.7 [0.50] |
| 12, 14, 16 | 202C642 | 17.5 [0.69] |
| 16, 18, 20, 22 | 202C653 | 22.4 [0.88] |
| 24 | 202C663 | 22.9 [0.90] |





Catalog 1654025
Revised 3-13

www.te.com

Dimensions are shown for reference purposes only. Specifications subject to change.

Dimensions are in millimeters unless otherwise specified.

USA: +1 800 522 6752
Asia Pacific: +86 0 400 820 6015
UK: +44 800 267 666

For additional support numbers please visit www.te.com

## Code 40 MIL-C-38999 Series III and IV (Continued)

### CRES-Lock Adapters (USA)
### BND Adapters (Europe)

### Code 40 Band Strap Adapter

**Notes:**
1. This product is designed to terminate a braided cable shield by means of a band strap and a heat shrinkable lipped boot to a connector.
2. See CH00-0250-016 for ordering information, modifications and additional dimensions.
3. See drawing BND-XX25S for band strap dimensions and information.
4. Adapter to be permanently marked with code identification number and full part number (e.g. 06090-BND40AB00-1814). Band strap shall bear no part marking.
5. All entry sizes are shown in Table II. Maximum entry sizes are as shown in Table I. For larger entry sizes than the maximum, a Type II adapter may be supplied. See CH00-0250-016 for further details.
6. Adapter mates to: MIL-C-38999 Series III and IV, Class C, F, K and W, D38999/20, /24, /26, /40, /46 and /47 Connectors. When so mated it shall provide a water-tight seal meeting the requirements of MIL-C-85049, paragraph 3.5.7.
7. Coupling nut shall have 3 lock wire holes 120° apart.

**For additional codes available, contact TE.**

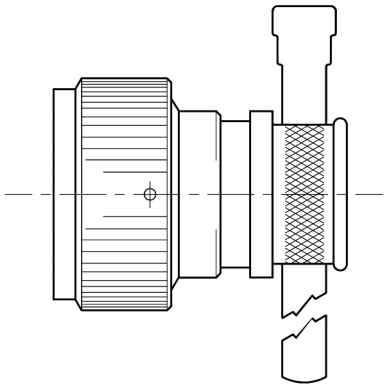


**Straight Adapter**
**Code 00**

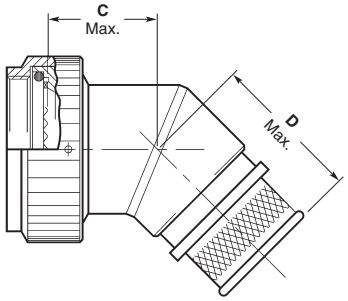


**45° Adapter**
**Code 45**

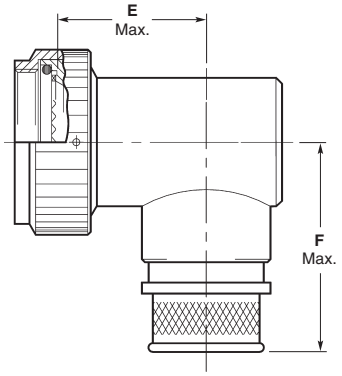


**90° Adapter**
**Code 90**

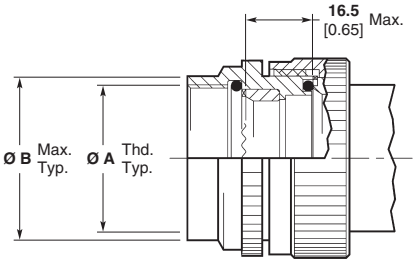


**Type II Modification**
**(See Note 5)**

| Available in: | Americas | Europe | Asia Pacific |
|---|---|---|---|
| | ■ | ■ | ■ |



Catalog 1654025
Revised 3-13

www.te.com

Dimensions are shown for reference purposes only. Specifications subject to change.

Dimensions are in millimeters unless otherwise specified.

USA: +1 800 522 6752
Asia Pacific: +86 0 400 820 6015
UK: +44 800 267 666

For additional support numbers please visit www.te.com

## Code 40 MIL-C-38999 Series III and IV (Continued)

### CRES-Lock Adapters (USA) BND Adapters (Europe) (continued)

### Code 40 Band Strap Adapter (Continued)

**Table I**

| Order Number | Shell Size[2] Com. | Shell Size[2] MIL | Entry Size Max. Type I[1] | Ø A Metric Thread Class 2B | Ø B Max. | Ø B Max.[3] | C Max. | D Max. | F Max. |
|---|---|---|---|---|---|---|---|---|---|
| 8 | 9 | A | 04 | M12 x 1.0 | **19.1** 0.75 | **24.6** 0.97 | **20.8** 0.82 | **26.7** 1.05 | **32.0** 1.26 |
| 10 | 11 | B | 07 | M15 x 1.0 | **21.6** 0.85 | **27.0** 1.06 | **21.3** 0.84 | **27.4** 1.08 | **34.5** 1.36 |
| 12 | 13 | C | 09 | M18 x 1.0 | **25.4** 1.00 | **31.0** 1.22 | **22.1** 0.87 | **28.2** 1.11 | **36.1** 1.42 |
| 14 | 15 | D | 10 | M22 x 1.0 | **29.2** 1.15 | **35.8** 1.41 | **22.6** 0.89 | **28.2** 1.11 | **38.1** 1.50 |
| 16 | 17 | E | 12 | M25 x 1.0 | **31.8** 1.25 | **37.3** 1.47 | **23.4** 0.92 | **29.0** 1.14 | **39.6** 1.56 |
| 18 | 19 | F | 14 | M28 x 1.0 | **35.6** 1.40 | **40.6** 1.60 | **24.1** 0.95 | **29.7** 1.17 | **40.9** 1.61 |
| 20 | 21 | G | 16 | M31 x 1.0 | **38.1** 1.50 | **44.5** 1.75 | **24.6** 0.97 | **30.5** 1.20 | **42.4** 1.67 |
| 22 | 23 | H | 18 | M34 x 1.0 | **41.9** 1.65 | **47.0** 1.85 | **25.4** 1.00 | **31.3** 1.23 | **43.9** 1.73 |
| 24 | 25 | J | 20 | M37 x 1.0 | **44.5** 1.75 | **51.6** 2.03 | **25.9** 1.02 | **31.3** 1.23 | **46.5** 1.83 |

1. All entry sizes are shown in Table II. Maximum entry sizes are as shown in Table I. For larger entry sizes than the maximum, a Type II adapter may be supplied. See CH00-0250-016 for further details.
2. Adapter mates to: MIL-C-38999 Series III and IV, Class C, F, K and W, D38999/20, /24, /26, /40, /46 and /47 Connectors. When so mated it shall provide a water-tight seal meeting the requirements of MIL-C-85049, paragraph 3.5.7.
3. These dimensions apply if a self-locking coupling nut is used, modification code "S".

**Table II**

| Entry Size | Ø Z +0.25/-0.50 [+0.010/-0.020] | Ø S ±0.51 [±0.020] | Ø Y ±0.38 [±0.015] | E Max. |
|---|---|---|---|---|
| 03 | **4.75** 0.188 | **7.92** 0.312 | **11.10** 0.438 | **15.8** 0.62 |
| 04 | **6.35** 0.250 | **9.52** 0.375 | **12.70** 0.500 | **16.3** 0.64 |
| 05 | **7.92** 0.312 | **11.12** 0.438 | **14.30** 0.563 | **16.8** 0.66 |
| 06 | **9.52** 0.375 | **12.70** 0.500 | **15.88** 0.625 | **17.8** 0.70 |
| 07 | **11.12** 0.438 | **14.30** 0.562 | **17.50** 0.689 | **18.3** 0.72 |
| 08 | **12.70** 0.500 | **15.88** 0.625 | **19.05** 0.750 | **19.8** 0.78 |
| 09 | **14.30** 0.562 | **17.50** 0.688 | **20.65** 0.813 | **21.3** 0.84 |
| 10 | **15.88** 0.625 | **19.05** 0.750 | **22.23** 0.875 | **22.4** 0.88 |
| 11 | **17.50** 0.688 | **20.65** 0.812 | **23.80** 0.938 | **22.9** 0.90 |
| 12 | **19.05** 0.750 | **22.23** 0.875 | **25.40** 1.000 | **23.4** 0.92 |
| 13 | **20.65** 0.812 | **23.83** 0.938 | **27.00** 1.063 | **24.4** 0.96 |
| 14 | **22.23** 0.875 | **25.40** 1.000 | **30.16** 1.189 | **25.4** 1.00 |

**Table II** (Continued)

| Entry Size | Ø Z +0.25/-0.50 [+0.010/-0.020] | Ø S ±0.51 [±0.020] | Ø Y ±0.38 [±0.015] | E Max. |
|---|---|---|---|---|
| 15 | **23.83** .0938 | **27.00** 1.062 | **31.75** 1.250 | **25.4** 1.00 |
| 16 | **25.40** 1.000 | **28.58** 1.125 | **33.34** 1.313 | **26.4** 1.04 |
| 18 | **28.58** 1.125 | **31.75** 1.250 | **36.51** 1.438 | **27.7** 1.09 |
| 20 | **31.75** 1.250 | **34.90** 1.375 | **39.69** 1.563 | **29.2** 1.15 |
| 22 | **34.90** 1.375 | **38.10** 1.500 | **42.86** 1.688 | N/A |
| 24 | **38.10** 1.500 | **41.28** 1.625 | **46.83** 1.844 | N/A |
| 26 | **41.28** 1.625 | **44.45** 1.750 | **49.61** 1.953 | N/A |
| 28 | **44.45** 1.750 | **47.63** 1.875 | **52.78** 2.078 | N/A |
| 30 | **47.65** 1.875 | **50.80** 2.000 | **56.36** 2.219 | N/A |
| 32 | **50.80** 2.000 | **54.00** 2.125 | **59.53** 2.344 | N/A |
| 34 | **54.00** 2.125 | **57.15** 2.250 | **62.71** 2.469 | N/A |





Catalog 1654025
Revised 3-13

www.te.com

Dimensions are shown for reference purposes only. Specifications subject to change.

Dimensions are in millimeters unless otherwise specified.

USA: +1 800 522 6752
Asia Pacific: +86 0 400 820 6015
UK: +44 800 267 666

For additional support numbers please visit www.te.com

## Code 41 MIL-C-38999 Series I and II

### Braided Adapters

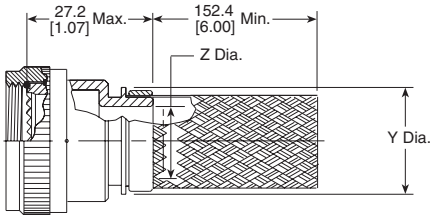


**204M0XX-XXXXX**

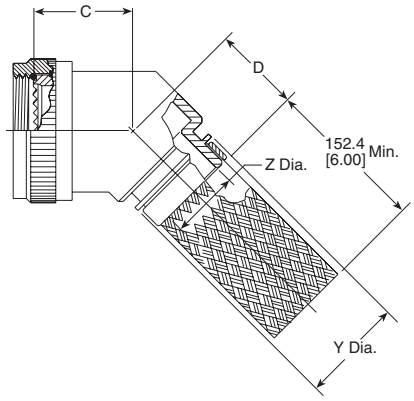


**204M1XX-XXXXX**

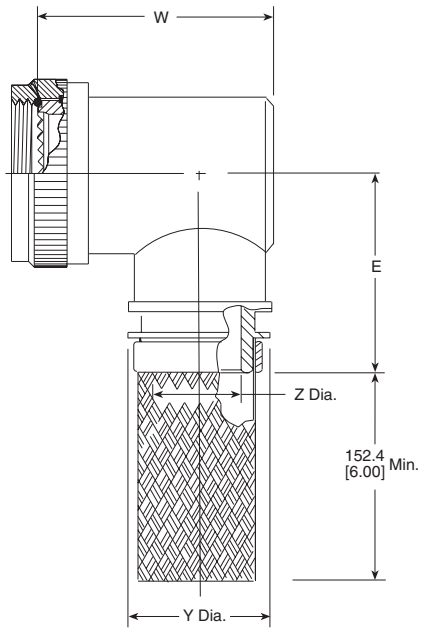


**204M2XX-XXXXX**

### Table of Dimensions

| Order No. | Shell Size | | Max. Entry* Size Type 1 | A Unified Thread Class 2B | Dimensions | | |
|---|---|---|---|---|---|---|---|
| | Series I | Series II | | | C Max. | D Max. | E Max. |
| 08 | 9 | 8 | 04 | .438-28 UNEF | 19.8 [0.78] | 23.1 [0.91] | 29.2 [1.15] |
| 10 | 11 | 10 | 06 | .562-24 UNEF | 20.3 [0.80] | 23.6 [0.93] | 30.7 [1.21] |
| 12 | 13 | 12 | 08 | .688-24 UNEF | 21.1 [0.83] | 24.4 [0.96] | 32.5 [1.28] |
| 14 | 15 | 14 | 10 | .812-20 UNEF | 21.6 [0.85] | 24.9 [0.98] | 34.0 [1.34] |
| 16 | 17 | 16 | 12 | .938-20 UNEF | 22.4 [0.88] | 25.4 [1.00] | 35.6 [1.40] |
| 18 | 19 | 18 | 13 | 1.062-18 UNEF | 22.9 [0.90] | 26.2 [1.03] | 37.1 [1.46] |
| 20 | 21 | 20 | 15 | 1.188-18 UNEF | 23.6 [0.93] | 26.9 [1.06] | 38.9 [1.53] |
| 22 | 23 | 22 | 16 | 1.312-18 UNEF | 24.4 [0.96] | 27.4 [1.08] | 40.4 [1.59] |
| 24 | 25 | 24 | 18 | 1.438-18 UNEF | 24.9 [0.98] | 28.2 [1.11] | 41.9 [1.65] |

*For larger than maximum type 1 entry sizes, a two-piece adapter will be supplied.
Contact TE for information.

| Available in: | Americas | Europe | Asia Pacific |
|---|---|---|---|
| | ■ | ■ | ■ |



Catalog 1654025
Revised 3-13

www.te.com

Dimensions are shown for reference purposes only. Specifications subject to change.

Dimensions are in millimeters unless otherwise specified.

USA: +1 800 522 6752
Asia Pacific: +86 0 400 820 6015
UK: +44 800 267 666

For additional support numbers please visit www.te.com

## Code 41 MIL-C-38999 Series I and II (Continued)

### Braided Adapters
(continued)

### Entry Size Dimensions

| Entry Size | Dimensions | | |
|---|---|---|---|
| | Z ±0.020 (±0.51) | Y Dia. Min. | W Max. |
| 03 | 4.75 [.187] | 9.98 [.393] | 27.2 [1.07] |
| 04 | 6.35 [.250] | 11.58 [.456] | 27.2 [1.07] |
| 05 | 7.92 [.312] | 13.08 [.515] | 28.7 [1.13] |
| 06 | 9.53 [.375] | 14.76 [.581] | 30.2 [1.19] |
| 07 | 11.13 [.438] | 16.33 [.643] | 31.8 [1.25] |
| 08 | 12.70 [.500] | 17.91 [.705] | 33.5 [1.32] |
| 09 | 14.27 [.562] | 17.91 [.705] | 36.6 [1.44] |
| 10 | 15.88 [.625] | 21.11 [.831] | 36.6 [1.44] |
| 11 | 17.48 [.688] | 22.68 [.893] | 39.9 [1.57] |
| 12 | 19.05 [.750] | 24.21 [.953] | 39.9 [1.57] |
| 13 | 20.62 [.812] | 24.21 [.953] | 42.9 [1.69] |
| 14 | 22.23 [.875] | 27.46 [1.081] | 42.9 [1.69] |
| 15 | 23.83 [.938] | 29.03 [1.143] | 46.2 [1.82] |
| 16 | 25.40 [1.000] | 30.61 [1.205] | 46.2 [1.82] |
| 18 | 28.58 [1.125] | 35.08 [1.381] | 49.3 [1.94] |
| 20 | 31.75 [1.250] | 38.25 [1.506] | — |
| 22 | 34.93 [1.375] | 41.43 [1.631] | — |
| 24 | 38.10 [1.500] | 44.60 [1.756] | — |
| 28 | 44.45 [1.750] | 50.90 [2.004] | — |

### Molded Part Selection Guide (Braided)

| Tinel-Lock Entry Size | Standard K Parts | | | Low-Profile D Parts | | |
|---|---|---|---|---|---|---|
| | Straight Part No. | 90° Part No. | Cable OD (Min.) | Straight Part No. | 90° Part No. | Cable OD (Min.) |
| 04 | 202K232 | — | 3.3 [0.1] | — | — | — |
| 04 | 202W232 | — | 4.3 [0.2] | — | — | — |
| 04 | 202K121 | 222K121 | 5.6 [0.2] | 202D211 | 222D211 | 6.4 [0.3] |
| 05, 06 | 202K132 | 222K132 | 5.9 [0.2] | 202D221 | 222D221 | 7.4 [0.3] |
| 07, 08 | 202K142 | 222K142 | 7.1 [0.3] | 202D232 | 222D232 | 8.4 [0.3] |
| 10, 12 | 202K153 | 222K152 | 8.4 [0.3] | 202D242 | 222D242 | 9.7 [0.4] |
| 14, 16 | 202K163 | 222K163 | 9.9 [0.4] | 202D253 | 222D253 | 10.5 [0.4] |
| 18, 20, 22 | 202K174 | 222K174 | 15.7 [0.6] | 202D263 | 222D263 | 12.2 [0.5] |
| 24 | 202K185 | 222K185 | 16.8 [0.7] | — | — | — |

### Uniboot Parts

| Order No. | Part No. | Cable OD (Min.) |
|---|---|---|
| 04 | 202C611 | 4.8 [0.19] |
| 05, 06, 07 | 202C621 | 8.1 [0.32] |
| 08, 10, 12 | 202C632 | 12.7 [0.50] |
| 12, 14, 16 | 202C642 | 17.5 [0.69] |
| 16, 18, 20, 22 | 202C653 | 22.4 [0.88] |
| 24 | 202C663 | 22.9 [0.90] |





Catalog 1654025
Revised 3-13

www.te.com

Dimensions are shown for reference purposes only. Specifications subject to change.

Dimensions are in millimeters unless otherwise specified.

USA: +1 800 522 6752
Asia Pacific: +86 0 400 820 6015
UK: +44 800 267 666

For additional support numbers please visit www.te.com

## Code 41 MIL-C-38999 Series I and II (Continued)

### Solid Adapters

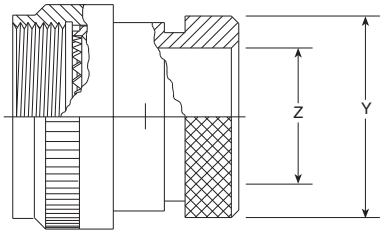


202M1XX-XXX

### Table of Dimensions

| Order No. | Shell Size Series I | Series II | Thread | Dimensions | |
|---|---|---|---|---|---|
| | | | | Y +0.00-0.30 (+0.00) (-0.76) dia. | Z min. |
| 08 | 9 | 8 | .438-28 UNEF | 18.26 [.719] | 6.71 [.264] |
| 10 | 11 | 10 | .562-24 UNEF | 21.44 [.844] | 9.96 [.392] |
| 12 | 13 | 12 | .688-24 UNEF | 24.61 [.969] | 12.85 [.506] |
| 14 | 15 | 14 | .812-20 UNEF | 27.79 [1.094] | 16.03 [.631] |
| 16 | 17 | 16 | .938-20 UNEF | 32.54 [1.281] | 19.20 [.756] |
| 18 | 19 | 18 | 1.062-18 UNEF | 35.71 [1.406] | 21.44 [.844] |
| 20 | 21 | 20 | 1.188-18 UNEF | 38.89 [1.531] | 24.64 [.970] |
| 22 | 23 | 22 | 1.312-18 UNEF | 42.06 [1.656] | 27.79 [1.094] |
| 24 | 25 | 24 | 1.438-18 UNEF | 45.24 [1.781] | 30.71 [1.209] |

### Molded Part Selection Guide (Solid)

| Order No. | Standard K Parts | | | Low-Profile D Parts | | |
|---|---|---|---|---|---|---|
| | Straight Part No. | 90° Part No. | Cable OD (Min.) | Straight Part No. | 90° Part No. | Cable OD (Min.) |
| 08 | 202K132 | 222K132 | 5.9 [0.23] | 202D221 | 222D221 | 7.4 [0.29] |
| 10 | 202K142 | 222K142 | 7.1 [0.28] | 202D232 | 222D232 | 8.4 [0.33] |
| 12, 14 | 202K153 | 222K152 | 8.4 [0.33] | 202D242 | 222D242 | 9.7 [0.38] |
| 16, 18 | 202K163 | 222K163 | 9.9 [0.39] | 202D253 | 222D253 | 10.5 [0.41] |
| 20, 22, 24 | 202K174 | 222K174 | 15.7 [0.62] | 202D263 | 222D263 | 12.2 [0.48] |

### Uniboot Parts

| Order No. | Part No. | Cable OD (Min.) |
|---|---|---|
| 08 | 202C621 | 8.1 [0.32] |
| 10 | 202C632 | 12.7 [0.50] |
| 12, 14 | 202C642 | 17.5 [0.69] |
| 16, 18, 20, 22 | 202C653 | 22.4 [0.88] |

| Available in: | Americas | Europe | Asia Pacific |
|---|---|---|---|
| | ■ | ■ | ■ |



Catalog 1654025
Revised 3-13

www.te.com

Dimensions are shown for reference purposes only. Specifications subject to change.

Dimensions are in millimeters unless otherwise specified.

USA: +1 800 522 6752
Asia Pacific: +86 0 400 820 6015
UK: +44 800 267 666

For additional support numbers please visit www.te.com

## Code 41 MIL-C-38999 Series I and II (Continued)

### Spin-Coupling Adapters

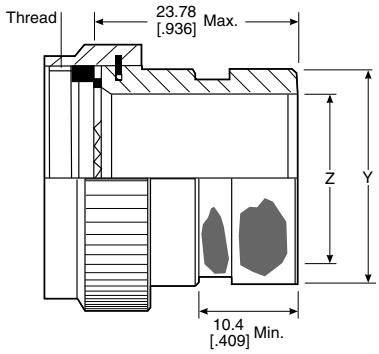


**202M2XX-XXX**

### Table of Dimensions

| Order No. | Shell Size Series I | Series II | Thread | Dimensions | |
|---|---|---|---|---|---|
| | | | | Y +0.00-0.76 Dia. | Z Min. |
| 08 | 9 | 8 | .438-28 UNEF | 13.54 [0.53] | 6.35 [0.25] |
| 10 | 11 | 10 | .562-24 UNEF | 15.37 [0.61] | 9.53 [0.38] |
| 12 | 13 | 12 | .688-24 UNEF | 19.66 [0.77] | 12.70 [0.50] |
| 14 | 15 | 14 | .812-20 UNEF | 21.29 [0.84] | 15.88 [0.63] |
| 16 | 17 | 16 | .938-20 UNEF | 24.46 [0.96] | 19.05 [0.75] |
| 18 | 19 | 18 | 1.062-18 UNEF | 26.47 [1.04] | 20.62 [0.81] |
| 20 | 21 | 20 | 1.188-18 UNEF | 30.91 [1.22] | 23.80 [0.94] |
| 22 | 23 | 22 | 1.312-18 UNEF | 34.42 [1.36] | 26.97 [1.06] |
| 24 | 25 | 24 | 1.438-18 UNEF | 36.65 [1.44] | 30.18 [1.19] |

### Molded Part Selection Guide (Spin-Coupling)

| Order No. | Standard K Parts | | | Low-Profile D Parts | | |
|---|---|---|---|---|---|---|
| | Straight Part No. | 90° Part No. | Cable OD (Min.) | Straight Part No. | 90° Part No. | Cable OD (Min.) |
| 08 | 202W232 | — | 4.3 [0.19] | — | — | — |
| 08 | 202K121 | 222K121 | 5.6 [0.22] | 202D211 | 222D211 | 6.4 [0.25] |
| 10 | 202K132 | 222K132 | 5.9 [0.23] | 202D221 | 222D221 | 7.4 [0.29] |
| 12, 14 | 202K142 | 222K142 | 7.1 [0.28] | 202D232 | 222D232 | 8.4 [0.33] |
| 16, 18 | 202K153 | 222K152 | 8.4 [0.33] | 202D242 | 222D242 | 9.7 [0.38] |
| 20, 22 | 202K163 | 222K163 | 9.9 [0.39] | 202D253 | 222D253 | 10.5 [0.41] |
| 24, 28 | 202K174 | 222K174 | 15.7 [0.62] | 202D263 | 222D263 | 12.2 [0.48] |

### Uniboot Parts

| Order No. | Part No. | Cable OD (Min.) |
|---|---|---|
| 08 | 202C611 | 4.8 [0.19] |
| 10, 12 | 202C621 | 8.1 [0.32] |
| 14, 16 | 202C632 | 12.7 [0.50] |
| 18, 20 | 202C642 | 17.5 [0.69] |
| 22, 24 | 202C653 | 22.4 [0.88] |

| Available in: | Americas | Europe | Asia Pacific |
|---|---|---|---|
| | ■ | ■ | ■ |





Catalog 1654025
Revised 3-13

www.te.com

Dimensions are shown for reference purposes only. Specifications subject to change.

Dimensions are in millimeters unless otherwise specified.

USA: +1 800 522 6752
Asia Pacific: +86 0 400 820 6015
UK: +44 800 267 666

For additional support numbers please visit www.te.com

## Code 41 MIL-C-38999 Series I and II (Continued)

### Tinel-Lock Adapters

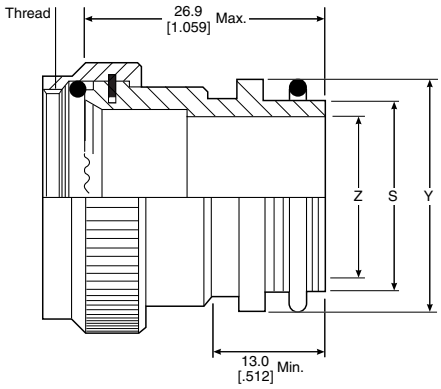


**TXR41XX00-XXXXXX**

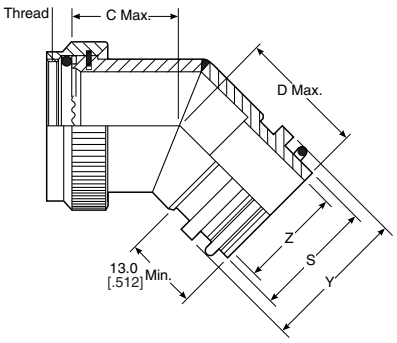


**TXR41XX45-XXXXXX**

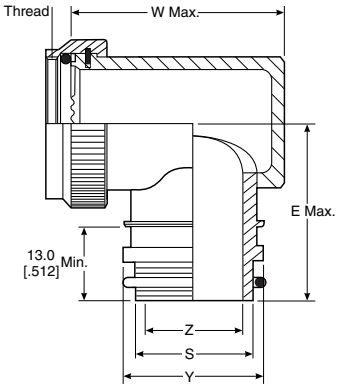


**TXR41XX90-XXXXXX**

### Table of Dimensions

| Order No. | Shell Size Series I | Series II | Max. Entry* Size Type 1 | A Unified Thread Class 2B | Dimensions | | |
|---|---|---|---|---|---|---|---|
| | | | | | C Max. | D Max. | E Max. |
| 08 | 9 | 8 | — | .438-28 UNEF | 17.5 [0.69] | 23.1 [0.91] | 29.2 [1.15] |
| 10 | 11 | 10 | — | .562-24 UNEF | 18.3 [0.72] | 23.6 [0.93] | 30.7 [1.21] |
| 12 | 13 | 12 | 08 | .688-24 UNEF | 18.8 [0.74] | 24.4 [0.96] | 32.5 [1.28] |
| 14 | 15 | 14 | 10 | .812-20 UNEF | 19.3 [0.76] | 24.9 [0.98] | 34.0 [1.34] |
| 16 | 17 | 16 | 12 | .938-20 UNEF | 20.1 [0.79] | 25.4 [1.00] | 35.6 [1.40] |
| 18 | 19 | 18 | 13 | 1.062-18 UNEF | 20.6 [0.81] | 26.2 [1.03] | 37.1 [1.46] |
| 20 | 21 | 20 | 15 | 1.188-18 UNEF | 21.3 [0.84] | 26.9 [1.06] | 38.9 [1.53] |
| 22 | 23 | 22 | 16 | 1.312-18 UNEF | 22.1 [0.87] | 27.4 [1.08] | 40.4 [1.59] |
| 24 | 25 | 24 | 18 | 1.438-18 UNEF | 22.6 [0.89] | 28.2 [1.11] | 41.9 [1.65] |

*For larger than maximum type 1 entry sizes, a two-piece adapter will be supplied. Contact TE for information.

| Available in: | Americas | Europe | Asia Pacific |
|---|---|---|---|
| | ■ | ■ | ■ |



Catalog 1654025
Revised 3-13

www.te.com

Dimensions are shown for reference purposes only. Specifications subject to change.

Dimensions are in millimeters unless otherwise specified.

USA: +1 800 522 6752
Asia Pacific: +86 0 400 820 6015
UK: +44 800 267 666

For additional support numbers please visit www.te.com

## Code 41 MIL-C-38999 Series I and II (Continued)

### Tinel-Lock Adapters
(continued)

### Entry Size Dimensions

| Entry Size | Dimensions | | | |
|---|---|---|---|---|
| | Z +0.25–0.5 | S Diameter (Min.–Max.) | Y ±0.38 | W Max. |
| 04 | 6.35 [0.25] | 9.39–9.56 [0.37–0.38] | 13.97 [0.55] | 27.2 [1.07] |
| 05 | 7.92 [0.31] | 10.97–11.13 [0.43–0.44] | 15.54 [0.61] | 28.7 [1.13] |
| 06 | 9.52 [0.37] | 12.57–12.73 [0.49–0.50] | 17.14 [0.67] | 30.2 [1.19] |
| 07 | 11.09 [0.44] | 14.12–14.31 [0.55–0.56] | 18.71 [0.74] | 31.8 [1.25] |
| 08 | 12.70 [0.50] | 15.72–15.91 [0.62–0.63] | 20.32 [0.80] | 33.5 [1.32] |
| 10 | 15.87 [0.62] | 18.84–19.11 [0.74–0.75] | 23.49 [0.92] | 36.6 [1.44] |
| 12 | 19.05 [0.75] | 22.02–22.28 [0.87–0.88] | 26.67 [1.05] | 39.9 [1.57] |
| 14 | 22.23 [0.88] | 25.17–25.46 [0.99–1.00] | 29.84 [1.17] | 42.9 [1.69] |
| 16 | 25.4 [1.00] | 28.34–28.63 [1.12–1.13] | 33.02 [1.30] | 46.2 [1.82] |
| 18 | 28.57 [1.12] | 31.52–31.81 [1.24–1.25] | 36.19 [1.42] | 49.3 [1.94] |

### Molded Part Selection Guide (Tinel)

| Order No. | Standard K Parts | | | Low-Profile D Parts | | |
|---|---|---|---|---|---|---|
| | Straight Part No. | 90° Part No. | Cable OD (Min.) | Straight Part No. | 90° Part No. | Cable OD (Min.) |
| 04 | 202K232 | — | 3.3 [0.1] | — | — | — |
| 04 | 202W232 | — | 4.3 [0.2] | — | — | — |
| 04 | 202K121 | 222K121 | 5.6 [0.2] | 202D211 | 222D211 | 6.4 [0.3] |
| 05, 06 | 202K132 | 222K132 | 5.9 [0.2] | 202D221 | 222D221 | 7.4 [0.3] |
| 07, 08 | 202K142 | 222K142 | 7.1 [0.3] | 202D232 | 222D232 | 8.4 [0.3] |
| 10, 12 | 202K153 | 222K152 | 8.4 [0.3] | 202D242 | 222D242 | 9.7 [0.4] |
| 14, 16 | 202K163 | 222K163 | 9.9 [0.4] | 202D253 | 222D253 | 10.5 [0.4] |
| 18, 20, 22 | 202K174 | 222K174 | 15.7 [0.6] | 202D263 | 222D263 | 12.2 [0.5] |
| 24 | 202K185 | 222K185 | 16.8 [0.7] | — | — | — |

### Uniboot Parts

| Order No. | Part No. | Cable OD (Min.) |
|---|---|---|
| 04 | 202C611 | 4.8 [0.19] |
| 05, 06, 07 | 202C621 | 8.1 [0.32] |
| 08, 10, 12 | 202C632 | 12.7 [0.50] |
| 12, 14, 16 | 202C642 | 17.5 [0.69] |
| 16, 18, 20, 22 | 202C653 | 22.4 [0.88] |
| 24 | 202C663 | 22.9 [0.90] |





Catalog 1654025
Revised 3-13

www.te.com

Dimensions are shown for reference purposes only. Specifications subject to change.

Dimensions are in millimeters unless otherwise specified.

USA: +1 800 522 6752
Asia Pacific: +86 0 400 820 6015
UK: +44 800 267 666

For additional support numbers please visit www.te.com

## Code 41 MIL-C-38999 Series I and II (Continued)

### CRES-Lock Adapters (USA)
### BND Adapters (Europe)

### Code 41 Band Strap Adapter

**Notes:**
1. This product is designed to terminate a braided cable shield by means of a band strap and a heat shrinkable lipped boot to a connector.
2. See CH00-0250-016 for ordering information, modifications and additional dimensions.
3. See drawing BND-XX25S for band strap dimensions and information.
4. Adapter to be permanently marked with code identification number and full part number (e.g. 06090-BND41AB00-1812). Band strap shall bear no part marking.
5. All entry sizes are shown in Table II. Maximum entry sizes are as shown in Table I. For larger entry sizes than the maximum, a Type II adapter may be supplied. See CH00-0250-016 for further details.
6. Adapter mates to: MIL-C-38999 Series I and II, Class E and T, MS27466, MS27467, MS27468, MS27472, MS27473, MS27474, MS27479, MS27480, MS27481, MS27484, MS27497, MS27652, MS27653 and MS27656 Connectors.

**For additional codes available, contact TE.**

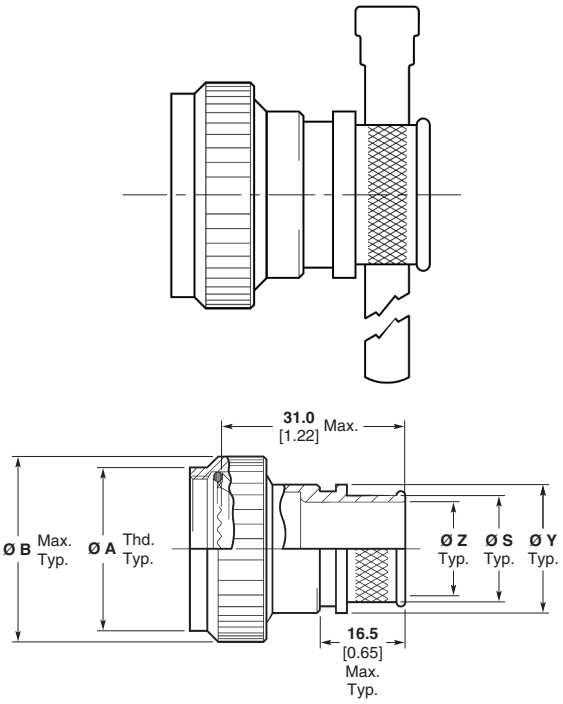


**Straight Adapter**
**Code 00**

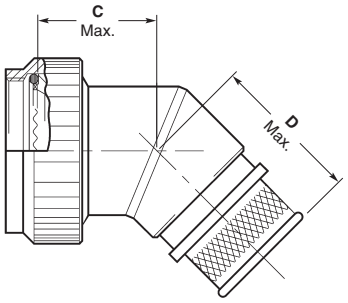


**45° Adapter**
**Code 45**

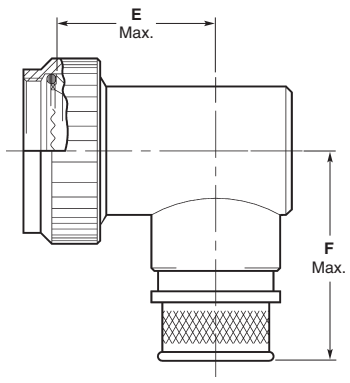


**90° Adapter**
**Code 90**

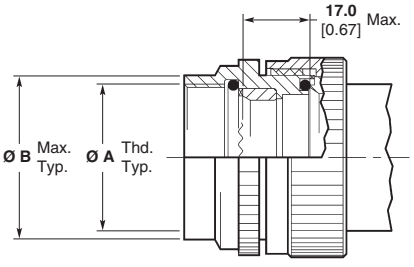


**Type II Modification**
**(See Note 5)**

| Available in: | Americas | Europe | Asia Pacific |
|---|---|---|---|
| | ■ | ■ | ■ |



Catalog 1654025
Revised 3-13

www.te.com

Dimensions are shown for reference purposes only. Specifications subject to change.

Dimensions are in millimeters unless otherwise specified.

USA: +1 800 522 6752
Asia Pacific: +86 0 400 820 6015
UK: +44 800 267 666

For additional support numbers please visit www.te.com

## Code 41 MIL-C-38999 Series I and II (Continued)

### CRES-Lock Adapters (USA) BND Adapters (Europe) (continued)

### Code 41 Band Strap Adapter (Continued)

**Table I**

| Order Number | Shell Size[2] Series I | Shell Size[2] Series II | Entry Size Max. Type I[1] | Ø A Unified Thread UNEF Class 2B | Ø B Max. | Ø B Max.[3] | C Max. | D Max. | F Max. |
|---|---|---|---|---|---|---|---|---|---|
| 08 | 9 | 08 | 04 | 0.4375–28 | **19.1** 0.75 | **24.6** 0.97 | **17.5** 0.69 | **27.2** 1.07 | **33.3** 1.31 |
| 10 | 11 | 10 | 06 | 0.5625–24 | **20.8** 0.85 | **27.0** 1.06 | **18.3** 0.72 | **27.7** 1.09 | **34.8** 1.37 |
| 12 | 13 | 12 | 08 | 0.6875–24 | **25.4** 1.00 | **31.0** 1.22 | **18.8** 0.74 | **28.4** 1.12 | **36.6** 1.44 |
| 14 | 15 | 14 | 10 | 0.8125–20 | **27.2** 1.10 | **35.8** 1.41 | **19.3** 0.76 | **29.0** 1.14 | **38.1** 1.50 |
| 16 | 17 | 16 | 12 | 0.9375–20 | **31.8** 1.25 | **37.3** 1.47 | **20.1** 0.79 | **29.5** 1.16 | **39.6** 1.56 |
| 18 | 19 | 18 | 13 | 1.0625–18 | **35.6** 1.40 | **40.6** 1.60 | **20.6** 0.81 | **30.2** 1.19 | **41.1** 1.62 |
| 20 | 21 | 20 | 15 | 1.1875–18 | **38.1** 1.50 | **44.5** 1.75 | **21.3** 0.84 | **31.0** 1.22 | **42.9** 1.69 |
| 22 | 23 | 22 | 16 | 1.3125–18 | **41.9** 1.65 | **46.8** 1.84 | **22.1** 0.87 | **31.5** 1.24 | **44.5** 1.75 |
| 24 | 25 | 24 | 18 | 1.4375–18 | **44.5** 1.75 | **51.6** 2.03 | **22.6** 0.89 | **32.3** 1.27 | **46.0** 1.81 |

1. All entry sizes are shown in Table II. Maximum entry sizes are as shown in Table I. For larger entry sizes than the maximum, a Type II adapter may be supplied. See CH00-0250-016 for further details.
2. Adapter mates to: MIL-C-38999 Series I and II, Class E and T, MS27466, MS27467, MS27468, MS27472, MS27473, MS27474, MS27479, MS27480, MS27481, MS27484, MS27497, MS27652, MS27653 and MS27656 Connectors.
3. These dimensions apply if a self-locking coupling nut is used, modification code "S".

**Table II**

| Entry Size | Ø Z +0.25/-0.50 [+0.010/-0.020] | Ø S ±0.51 [±0.020] | Ø Y ±0.38 [±0.015] | E Max. |
|---|---|---|---|---|
| 03 | **4.75** 0.188 | **7.92** 0.312 | **11.10** 0.438 | **15.3** 0.60 |
| 04 | **6.35** 0.250 | **9.52** 0.375 | **12.70** 0.500 | **16.3** 0.64 |
| 05 | **7.92** 0.312 | **11.12** 0.438 | **14.30** 0.563 | **16.8** 0.66 |
| 06 | **9.52** 0.375 | **12.70** 0.500 | **15.88** 0.625 | **17.8** 0.70 |
| 07 | **11.12** 0.438 | **14.30** 0.562 | **17.50** 0.689 | **18.8** 0.74 |
| 08 | **12.70** 0.500 | **15.88** 0.625 | **19.05** 0.750 | **19.3** 0.76 |
| 09 | **14.30** 0.562 | **17.50** 0.688 | **20.65** 0.813 | **20.3** 0.80 |
| 10 | **15.88** 0.625 | **19.05** 0.750 | **22.23** 0.875 | **21.3** 0.84 |
| 11 | **17.50** 0.688 | **20.65** 0.812 | **23.80** 0.938 | **21.8** 0.86 |
| 12 | **19.05** 0.750 | **22.23** 0.875 | **25.40** 1.000 | **22.9** 0.90 |
| 13 | **20.65** 0.812 | **23.83** 0.938 | **27.00** 1.063 | **23.8** 0.94 |
| 14 | **22.23** 0.875 | **25.40** 1.000 | **30.16** 1.189 | **24.4** 0.96 |

**Table II** (Continued)

| Entry Size | Ø Z +0.25/-0.50 [+0.010/-0.020] | Ø S ±0.51 [±0.020] | Ø Y ±0.38 [±0.015] | E Max. |
|---|---|---|---|---|
| 15 | **23.83** .0938 | **27.00** 1.062 | **31.75** 1.250 | **25.4** 1.00 |
| 16 | **25.40** 1.000 | **28.58** 1.125 | **33.34** 1.313 | **25.9** 1.02 |
| 18 | **28.58** 1.125 | **31.75** 1.250 | **36.51** 1.438 | **27.4** 1.08 |
| 20 | **31.75** 1.250 | **34.90** 1.375 | **39.69** 1.563 | N/A |
| 22 | **34.90** 1.375 | **38.10** 1.500 | **42.86** 1.688 | N/A |
| 24 | **38.10** 1.500 | **41.28** 1.625 | **46.83** 1.844 | N/A |
| 26 | **41.28** 1.625 | **44.45** 1.750 | **49.61** 1.953 | N/A |
| 28 | **44.45** 1.750 | **47.63** 1.875 | **52.78** 2.078 | N/A |
| 30 | **47.65** 1.875 | **50.80** 2.000 | **56.36** 2.219 | N/A |
| 32 | **50.80** 2.000 | **54.00** 2.125 | **59.53** 2.344 | N/A |
| 34 | **54.00** 2.125 | **57.15** 2.250 | **62.71** 2.469 | N/A |





Catalog 1654025
Revised 3-13

www.te.com

Dimensions are shown for reference purposes only. Specifications subject to change.

Dimensions are in millimeters unless otherwise specified.

USA: +1 800 522 6752
Asia Pacific: +86 0 400 820 6015
UK: +44 800 267 666

For additional support numbers please visit www.te.com

## Code 54 MIL-C-5015 (MS3400), MIL-C-26482 Series 2, MIL-C-83723 Series I and III, MIL-C-81703 Series III

### Braided Adapters

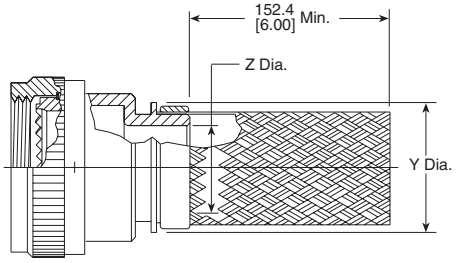


**203M0XX-XXXXX**

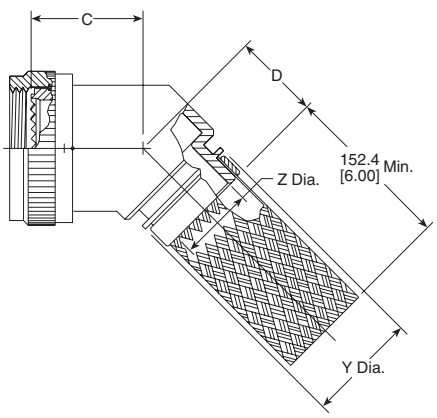


**203M1XX-XXXXX**

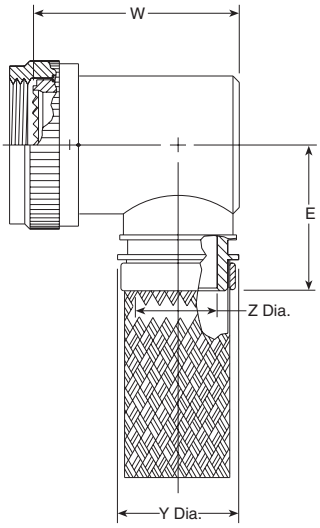


**203M2XX-XXXXX**

### Table of Dimensions

| Order No. | Shell Size | | Max. Entry Size Type 1* | Thread | Dimensions | | |
|---|---|---|---|---|---|---|---|
| | MIL-C-81703 | MIL-C-5015 | | | C Max. | D Max. | E Max. |
| 03 | 3 | — | 04 | .562-24 UNEF | 19.10 [0.75] | 23.10 [0.91] | 28.70 [1.13] |
| 08 | — | 8 & 8S | 04 | .500-20 UNF | 19.10 [0.75] | 23.10 [0.91] | 27.90 [1.10] |
| 10 | — | 10, 10S & 10 SL | 06 | .625-24 UNEF | 19.60 [0.77] | 23.60 [0.93] | 29.50 [1.16] |
| 12 | 7 | 12 & 12S | 08 | .750-20 UNEF | 20.30 [0.80] | 24.10 [0.95] | 31.00 [1.22] |
| 14 | 12 | 14 & 14S | 08 | .875-20 UNEF | 20.80 [0.82] | 24.60 [0.97] | 32.50 [1.28] |
| 16 | 19 | 16 & 16S | 10 | 1.000-20 UNEF | 21.30 [0.84] | 25.40 [1.00] | 34.30 [1.35] |
| 18 | 27 | 18 | 12 | 1.062-18 UNEF | 21.80 [0.86] | 25.70 [1.01] | 35.60 [1.40] |
| 20 | 37 | 20 | 14 | 1.188-18 UNEF | 22.40 [0.88] | 26.40 [1.04] | 37.10 [1.46] |
| 22 | — | 22 | 16 | 1.312-18 UNEF | 23.10 [0.91] | 26.90 [1.06] | 38.90 [1.53] |
| 24 | — | 24 | 18 | 1.438-18 UNEF | 23.60 [0.93] | 27.70 [1.09] | 40.40 [1.59] |
| 28 | — | 28 | 22 | 1.750-18 UNS | 24.90 [0.98] | 29.20 [1.15] | 45.20 [1.78] |
| 32 | — | 32 | 24 | 2.000-18 UNS | 26.20 [1.03] | 30.50 [1.20] | 48.30 [1.90] |
| 36 | — | 36 | 24 | 2.250-16 UN | 27.40 [1.08] | 31.80 [1.25] | 51.60 [2.03] |
| 40 | — | 40 | 24 | 2.500-16 UN | 29.00 [1.14] | 33.30 [1.31] | 54.60 [2.15] |
| 44 | — | 44 | 24 | 2.750-16 UN | 30.20 [1.19] | 34.50 [1.36] | 57.90 [2.28] |
| 48 | — | 48 | 24 | 3.000-16 UN | 31.50 [1.24] | 35.10 [1.38] | 61.00 [2.40] |
| 61 | 61 | — | 18 | 1.500-18 UNEF | 23.90 [0.94] | 27.90 [1.10] | 41.10 [1.62] |

*For larger than maximum type 1 entry sizes, a two-piece adapter will be supplied. Contact TE for information.

| Available in: | Americas | Europe | Asia Pacific |
|---|---|---|---|
| | ■ | ■ | ■ |



Catalog 1654025
Revised 3-13

www.te.com

Dimensions are shown for reference purposes only. Specifications subject to change.

Dimensions are in millimeters unless otherwise specified.

USA: +1 800 522 6752
Asia Pacific: +86 0 400 820 6015
UK: +44 800 267 666

For additional support numbers please visit www.te.com

## Code 54 MIL-C-5015 (MS3400), MIL-C-26482 Series 2, MIL-C-83723 Series I and III, MIL-C-81703 Series III (Continued)

### Braided Adapters
(continued)

### Entry Size Dimensions

| Entry Size | Dimensions | | | |
|---|---|---|---|---|
| | Z +0.25–0.5 | S Diameter (Min.–Max.) | Y ±0.38 | W Max. |
| 04 | 6.35 [0.25] | 9.39–9.56 [0.37–0.38] | 13.97 [0.55] | 28.4 [1.12] |
| 05 | 7.92 [0.31] | 10.97–11.13 [0.43–0.44] | 15.54 [0.61] | 30.2 [1.19] |
| 06 | 9.52 [0.37] | 12.57–12.73 [0.49–0.50] | 17.14 [0.67] | 31.8 [1.25] |
| 07 | 11.09 [0.44] | 14.12–14.31 [0.55–0.56] | 18.71 [0.74] | 33.3 [1.31] |
| 08 | 12.7 [0.50] | 15.72–15.91 [0.62–0.63] | 20.32 [0.80] | 35.1 [1.38] |
| 10 | 15.87 [0.62] | 18.84–19.11 [0.74–0.75] | 23.49 [0.92] | 38.1 [1.50] |
| 12 | 19.05 [0.75] | 22.02–22.28 [0.87–0.88] | 26.67 [1.05] | 41.1 [1.62] |
| 14 | 22.23 [0.88] | 25.17–25.46 [0.99–1.00] | 29.84 [1.17] | 44.5 [1.75] |
| 16 | 25.4 [1.00] | 28.34–28.63 [1.12–1.13] | 33.02 [1.30] | 47.8 [1.88] |
| 18 | 28.57 [1.12] | 31.52–31.81 [1.24–1.25] | 36.19 [1.42] | 50.8 [2.00] |
| 20 | 31.75 [1.25] | 34.69-34.98 [1.37-1.38] | 39.37 [1.55] | 53.8 [2.12] |
| 22 | 34.93 [1.38] | 37.79-38.15 [1.49-1.50] | 42.55 [1.68] | 57.2 [2.25] |
| 24 | 38.1 [1.50] | 40.97-41.33 [1.61-1.63] | 45.72 [1.80] | 60.5 [2.38] |

### Molded Part Selection Guide (Braided)

| Tinel-Lock Entry Size | Standard K Parts | | | Low-Profile D Parts | | |
|---|---|---|---|---|---|---|
| | Straight Part No. | 90° Part No. | Cable OD (Min.) | Straight Part No. | 90° Part No. | Cable OD (Min.) |
| 04 | 202K232 | — | 3.3 [0.1] | — | — | — |
| 04 | 202W232 | — | 4.3 [0.2] | — | — | — |
| 04 | 202K121 | 222K121 | 5.6 [0.2] | 202D211 | 222D211 | 6.4 [0.3] |
| 05, 06 | 202K132 | 222K132 | 5.9 [0.2] | 202D221 | 222D221 | 7.4 [0.3] |
| 07, 08 | 202K142 | 222K142 | 7.1 [0.3] | 202D232 | 222D232 | 8.4 [0.3] |
| 10, 12 | 202K153 | 222K152 | 8.4 [0.3] | 202D242 | 222D242 | 9.7 [0.4] |
| 14, 16 | 202K163 | 222K163 | 9.9 [0.4] | 202D253 | 222D253 | 10.5 [0.4] |
| 18, 20, 22 | 202K174 | 222K174 | 15.7 [0.6] | 202D263 | 222D263 | 12.2 [0.5] |
| 24 | 202K185 | 222K185 | 16.8 [0.7] | — | — | — |

### Uniboot Parts

| Tinel-Lock Entry Size | Part No. | Cable OD (Min.) |
|---|---|---|
| 04 | 202C611 | 4.8 [0.19] |
| 05, 06, 07 | 202C621 | 8.1 [0.32] |
| 08, 10, 12 | 202C632 | 12.7 [0.50] |
| 12, 14, 16 | 202C642 | 17.5 [0.69] |
| 16, 18, 20, 22 | 202C653 | 22.4 [0.88] |
| 24 | 202C663 | 22.9 [0.90] |





Catalog 1654025
Revised 3-13

www.te.com

Dimensions are shown for reference purposes only. Specifications subject to change.

Dimensions are in millimeters unless otherwise specified.

USA: +1 800 522 6752
Asia Pacific: +86 0 400 820 6015
UK: +44 800 267 666

For additional support numbers please visit www.te.com

## Code 54 MIL-C-5015 (MS3400), MIL-C-26482 Series 2, MIL-C-83723 Series I and III, MIL-C-81703 Series III (Continued)

### Solid Adapters

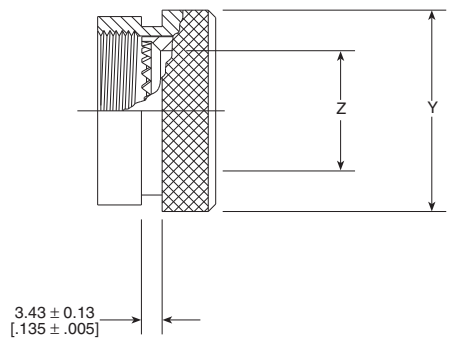


**201M9XX-XXX**

### Table of Dimensions

| Order No. | Shell Size | | Thread | Dimensions | |
|---|---|---|---|---|---|
| | MIL-C-81703 | MIL-C-5015 | | Y +0.00-0.51 Dia. | Z Dia. Min. |
| 03 | 3 | — | .562-24 UNEF | 13.54 [0.53] | 6.35 [0.25] |
| 08 | — | 8 & 8S | .500-20 UNF | 13.54 [0.53] | 6.35 [0.25] |
| 10 | — | 10, 10S & 10SL | .625-24 UNEF | 15.37 [0.61] | 9.02 [0.36] |
| 12 | 7 | 12 & 12S | .750-20 UNEF | 19.66 [0.77] | 12.47 [0.49] |
| 14 | 12 | 14 & 14S | .875-20 UNEF | 21.29 [0.84] | 14.35 [0.56] |
| 16 | 19 | 16 & 16S | 1.000-20 UNEF | 24.46 [0.96] | 17.53 [0.69] |
| 18 | 27 | 18 | 1.062-18 UNEF | 26.47 [1.04] | 19.53 [0.77] |
| 20 | 37 | 20 | 1.188-18 UNEF | 30.91 [1.22] | 22.71 [0.89] |
| 22 | — | 22 | 1.312-18 UNEF | 34.42 [1.36] | 25.88 [1.02] |
| 24 | — | 24 | 1.438-18 UNEF | 36.65 [1.44] | 28.80 [1.13] |
| 28 | — | 28 | 1.750-18 UNS | 43.41 [1.71] | 34.77 [1.37] |
| 32 | — | 32 | 2.000-18 UNS | 48.74 [1.92] | 41.02 [1.61] |
| 36 | — | 36 | 2.250-16 UN | 55.09 [2.17] | 46.48 [1.83] |
| 40 | — | 40 | 2.500-16 UN | 61.01 [2.40] | 51.94 [2.04] |
| 44 | — | 44 | 2.750-16 UN | 67.49 [2.66] | 58.42 [2.30] |
| 48 | — | 48 | 3.000-16 UN | 73.84 [2.91] | 64.77 [2.55] |
| 61 | 61 | — | 1.500-18 UNEF | 36.65 [1.44] | 29.82 [1.17] |

### Molded Part Selection Guide (Solid)

| Order No. | Standard K Parts | | | Low-Profile D Parts | | |
|---|---|---|---|---|---|---|
| | Straight Part No. | 90° Part No. | Cable OD (Min.) | Straight Part No. | 90° Part No. | Cable OD (Min.) |
| 03 | 202K132 | 222K132 | 5.9 [0.23] | 202D221 | 222D221 | 7.4 [0.29] |
| 10 | 202K142 | 222K142 | 7.1 [0.28] | 202D232 | 222D232 | 8.4 [0.33] |
| 12, 14 | 202K153 | 222K152 | 8.4 [0.33] | 202D242 | 222D242 | 9.7 [0.38] |
| 16, 18, 19, 27 | 202K163 | 222K163 | 9.9 [0.39] | 202D253 | 222D253 | 10.5 [0.41] |
| 20, 22, 24, 28, 37 | 202K174 | 222K174 | 15.7 [0.62] | 202D263 | 222D263 | 12.2 [0.48] |
| 28, 32 | 202K185 | 222K185 | 16.8 [0.66] | — | — | — |

### Uniboot Parts

| Order No. | Part No. | Cable OD (Min.) |
|---|---|---|
| 08 | 202C621 | 8.1 [0.32] |
| 7, 10, 12 | 202C632 | 12.7 [0.50] |
| 12, 14 | 202C642 | 17.5 [0.69] |
| 24, 27, 37, 61 | 202C653 | 22.4 [0.88] |

| Available in: | Americas | Europe | Asia Pacific |
|---|---|---|---|
| | ■ | ■ | ■ |



Catalog 1654025
Revised 3-13

www.te.com

Dimensions are shown for reference purposes only. Specifications subject to change.

Dimensions are in millimeters unless otherwise specified.

USA: +1 800 522 6752
Asia Pacific: +86 0 400 820 6015
UK: +44 800 267 666

For additional support numbers please visit www.te.com

## Code 54 MIL-C-5015 (MS3400), MIL-C-26482 Series 2, MIL-C-83723 Series I and III, MIL-C-81703 Series III (Continued)

### Spin-Coupling Adapters

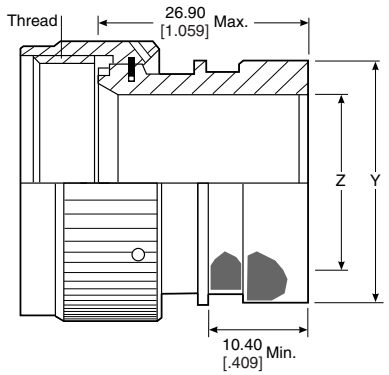


**201M1XX-XXX**

### Table of Dimensions

| Order No. | Shell Size | | Thread | Dimensions | |
|---|---|---|---|---|---|
| | MIL-C-81703 | MIL-C-5015 | | Y +0.00-0.51 Dia. | Z Dia. Min. |
| 03 | 3 | — | .562-24 UNEF | 13.54 [0.53] | 6.35 [0.25] |
| 08 | — | 8 & 8S | .500-20 UNF | 13.54 [0.53] | 6.35 [0.25] |
| 10 | — | 10, 10S & 10SL | .625-24 UNEF | 15.37 [0.61] | 9.02 [0.36] |
| 12 | 7 | 12 & 12S | .750-20 UNEF | 19.66 [0.77] | 12.47 [0.49] |
| 14 | 12 | 14 & 14S | .875-20 UNEF | 21.29 [0.84] | 14.35 [0.56] |
| 16 | 19 | 16 & 16S | 1.000-20 UNEF | 24.46 [0.96] | 17.53 [0.69] |
| 18 | 27 | 18 | 1.062-18 UNEF | 26.47 [1.04] | 19.53 [0.77] |
| 20 | 37 | 20 | 1.188-18 UNEF | 30.91 [1.22] | 22.71 [0.89] |
| 22 | — | 22 | 1.312-18 UNEF | 34.42 [1.36] | 25.88 [1.02] |
| 24 | — | 24 | 1.438-18 UNEF | 36.65 [1.44] | 28.80 [1.13] |
| 28 | — | 28 | 1.750-18 UNS | 43.41 [1.71] | 34.77 [1.37] |
| 32 | — | 32 | 2.000-18 UNS | 48.74 [1.92] | 41.02 [1.61] |
| 36 | — | 36 | 2.250-16 UN | 55.09 [2.17] | 46.48 [1.83] |
| 40 | — | 40 | 2.500-16 UN | 61.01 [2.40] | 51.94 [2.04] |
| 44 | — | 44 | 2.750-16 UN | 67.49 [2.66] | 58.42 [2.30] |
| 48 | — | 48 | 3.000-16 UN | 73.84 [2.91] | 64.77 [2.55] |
| 61 | 61 | — | 1.500-18 UNEF | 36.65 [1.44] | 29.82 [1.17] |

### Molded Part Selection Guide (Spin-coupling)

| Order No. | Standard K Parts | | | Low-Profile D Parts | | |
|---|---|---|---|---|---|---|
| | Straight Part No. | 90° Part No. | Cable OD (Min.) | Straight Part No. | 90° Part No. | Cable OD (Min.) |
| 03, 08 | 202W232 | — | 4.3 [0.19] | — | — | — |
| 03, 08 | 202K121 | 222K121 | 5.6 [0.22] | 202D211 | 222D211 | 6.4 [0.25] |
| 10, 11 | 202K132 | 222K132 | 5.9 [0.23] | 202D221 | 222D221 | 7.4 [0.29] |
| 12, 14 | 202K142 | 222K142 | 7.1 [0.28] | 202D232 | 222D232 | 8.4 [0.33] |
| 16, 18 | 202K153 | 222K152 | 8.4 [0.33] | 202D242 | 222D242 | 9.7 [0.38] |
| 20, 22 | 202K163 | 222K163 | 9.9 [0.39] | 202D253 | 222D253 | 10.5 [0.41] |
| 24, 28, 61 | 202K174 | 222K174 | 15.7 [0.62] | 202D263 | 222D263 | 12.2 [0.48] |
| 32, 36 | 202K185 | 222K185 | 16.8 [0.66] | — | — | — |

### Uniboot Parts

| Order No. | Part No. | Cable OD (Min.) |
|---|---|---|
| 08 | 202C621 | 8.1 [0.32] |
| 7, 10, 12 | 202C632 | 12.7 [0.50] |
| 12, 14 | 202C642 | 17.5 [0.69] |
| 24, 27, 37, 61 | 202C653 | 22.4 [0.88] |

| Available in: | Americas | Europe | Asia Pacific |
|---|---|---|---|
| | ■ | ■ | ■ |





Catalog 1654025
Revised 3-13

www.te.com

Dimensions are shown for reference purposes only. Specifications subject to change.

Dimensions are in millimeters unless otherwise specified.

USA: +1 800 522 6752
Asia Pacific: +86 0 400 820 6015
UK: +44 800 267 666

For additional support numbers please visit www.te.com

## Code 54 MIL-C-5015 (MS3400), MIL-C-26482 Series 2, MIL-C-83723 Series I and III, MIL-C-81703 Series III (Continued)

### Tinel-Lock Adapters

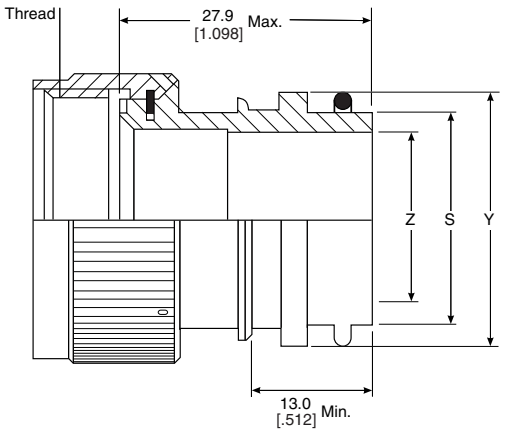


**TXR54XX00-XXXXXX**

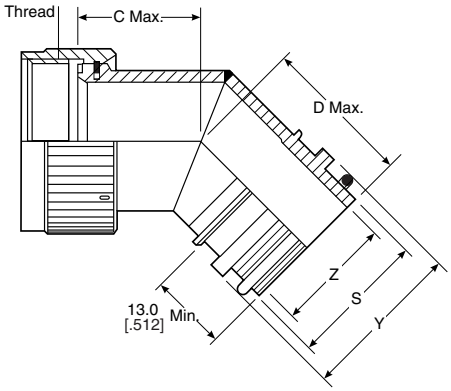


**TXR54XX45-XXXXXX**

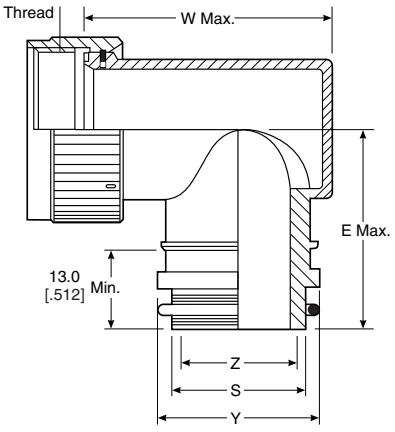


**TXR54XX90-XXXXXX**

| Available in: | Americas | Europe | Asia Pacific |
|---|---|---|---|
| | ■ | ■ | ■ |



Catalog 1654025
Revised 3-13

www.te.com

Dimensions are shown for reference purposes only. Specifications subject to change.

Dimensions are in millimeters unless otherwise specified.

USA: +1 800 522 6752
Asia Pacific: +86 0 400 820 6015
UK: +44 800 267 666

For additional support numbers please visit www.te.com

## Code 54 MIL-C-5015 (MS3400), MIL-C-26482 Series 2, MIL-C-83723 Series I and III, MIL-C-81703 Series III (Continued)

### Tinel-Lock Adapters
(continued)

### Table of Dimensions

| Order No. | Shell Size | | Max. Entry Size Type 1* | Thread | Dimensions | | |
|---|---|---|---|---|---|---|---|
| | MIL-C-81703 | MIL-C-5015 | | | C Max. | D Max. | E Max. |
| 03 | 3 | — | 04 | .562-24 UNEF | 19.10 [0.75] | 23.10 [0.91] | 28.70 [1.13] |
| 08 | — | 8 & 8S | 04 | .500-20 UNF | 19.10 [0.75] | 23.10 [0.91] | 27.90 [1.10] |
| 10 | — | 10, 10S & 10 SL | 06 | .625-24 UNEF | 19.60 [0.77] | 23.60 [0.93] | 29.50 [1.16] |
| 12 | 7 | 12 & 12S | 08 | .750-20 UNEF | 20.30 [0.80] | 24.10 [0.95] | 31.00 [1.22] |
| 14 | 12 | 14 & 14S | 08 | .875-20 UNEF | 20.80 [0.82] | 24.60 [0.97] | 32.50 [1.28] |
| 16 | 19 | 16 & 16S | 10 | 1.000-20 UNEF | 21.30 [0.84] | 25.40 [1.00] | 34.30 [1.35] |
| 18 | 27 | 18 | 12 | 1.062-18 UNEF | 21.80 [0.86] | 25.70 [1.01] | 35.60 [1.40] |
| 20 | 37 | 20 | 14 | 1.188-18 UNEF | 22.40 [0.88] | 26.40 [1.04] | 37.10 [1.46] |
| 22 | — | 22 | 16 | 1.312-18 UNEF | 23.10 [0.91] | 26.90 [1.06] | 38.90 [1.53] |
| 24 | — | 24 | 18 | 1.438-18 UNEF | 23.60 [0.93] | 27.70 [1.09] | 40.40 [1.59] |
| 28 | — | 28 | 22 | 1.750-18 UNS | 24.90 [0.98] | 29.20 [1.15] | 45.20 [1.78] |
| 32 | — | 32 | 24 | 2.000-18 UNS | 26.20 [1.03] | 30.50 [1.20] | 48.30 [1.90] |
| 36 | — | 36 | 24 | 2.250-16 UN | 27.40 [1.08] | 31.80 [1.25] | 51.60 [2.03] |
| 40 | — | 40 | 24 | 2.500-16 UN | 29.00 [1.14] | 33.30 [1.31] | 54.60 [2.15] |
| 44 | — | 44 | 24 | 2.750-16 UN | 30.20 [1.19] | 34.50 [1.36] | 57.90 [2.28] |
| 48 | — | 48 | 24 | 3.000-16 UN | 31.50 [1.24] | 35.10 [1.38] | 61.00 [2.40] |
| 61 | 61 | — | 18 | 1.500-18 UNEF | 23.90 [0.94] | 27.90 [1.10] | 41.10 [1.62] |

*For larger than maximum type 1 entry sizes, a two-piece adapter will be supplied. Contact TE for information.

### Entry Size Dimensions

| Entry Size | Dimensions | | | |
|---|---|---|---|---|
| | Z +0.25–0.5 | S Diameter (Min.–Max.) | Y ±0.38 | W Max. |
| 04 | 6.35 [0.25] | 9.39—9.56 [0.37—0.38] | 13.97 [0.55] | 28.4 [1.12] |
| 05 | 7.92 [0.31] | 10.97—11.13 [0.43—0.44] | 15.54 [0.61] | 30.2 [1.19] |
| 06 | 9.52 [0.37] | 12.57—12.73 [0.49—0.50] | 17.14 [0.67] | 31.8 [1.25] |
| 07 | 11.09 [0.44] | 14.12—14.31 [0.55—0.56] | 18.71 [0.74] | 33.3 [1.31] |
| 08 | 12.70 [0.50] | 15.72—15.91 [0.62—0.63] | 20.32 [0.80] | 35.1 [1.38] |
| 10 | 15.87 [0.62] | 18.84—19.11 [0.74—0.75] | 23.49 [0.92] | 38.1 [1.50] |
| 12 | 19.05 [0.75] | 22.02—22.28 [0.87—0.88] | 26.67 [1.05] | 41.1 [1.62] |
| 14 | 22.23 [0.88] | 25.17—25.46 [0.99—1.00] | 29.84 [1.17] | 44.5 [1.75] |
| 16 | 25.40 [1.00] | 28.34—28.63 [1.12—1.13] | 33.02 [1.30] | 47.8 [1.88] |
| 18 | 28.57 [1.12] | 31.52—31.81 [1.24—1.25] | 36.19 [1.42] | 50.8 [2.00] |
| 20 | 31.75 [1.25] | 34.69-34.98 [1.37-1.38] | 39.37 [1.55] | 53.8 [2.12] |
| 22 | 34.93 [1.38] | 37.79-38.15 [1.49-1.50] | 42.55 [1.68] | 57.2 [2.25] |
| 24 | 38.10 [1.50] | 40.97-41.33 [1.61-1.63] | 45.72 [1.80] | 60.5 [2.38] |

### Molded Part Selection Guide (Tinel)

| Tinel-Lock Entry Size | Standard K Parts | | | Low-Profile D Parts | | |
|---|---|---|---|---|---|---|
| | Straight Part No. | 90° Part No. | Cable OD (Min.) | Straight Part No. | 90° Part No. | Cable OD (Min.) |
| 04 | 202K232 | — | 3.3 [0.1] | — | — | — |
| 04 | 202W232 | — | 4.3 [0.2] | — | — | — |
| 04 | 202K121 | 222K121 | 5.6 [0.2] | 202D211 | 222D211 | 6.4 [0.3] |
| 05, 06 | 202K132 | 222K132 | 5.9 [0.2] | 202D221 | 222D221 | 7.4 [0.3] |
| 07, 08 | 202K142 | 222K142 | 7.1 [0.3] | 202D232 | 222D232 | 8.4 [0.3] |
| 10, 12 | 202K153 | 222K152 | 8.4 [0.3] | 202D242 | 222D242 | 9.7 [0.4] |
| 14, 16 | 202K163 | 222K163 | 9.9 [0.4] | 202D253 | 222D253 | 10.5 [0.4] |
| 18, 20, 22 | 202K174 | 222K174 | 15.7 [0.6] | 202D263 | 222D263 | 12.2 [0.5] |
| 24 | 202K185 | 222K185 | 16.8 [0.7] | — | — | — |

### Uniboot Parts

| Tinel-Lock Entry Size | Part No. | Cable OD (Min.) |
|---|---|---|
| 04 | 202C611 | 4.8 [0.19] |
| 05, 06, 07 | 202C621 | 8.1 [0.32] |
| 08, 10, 12 | 202C632 | 12.7 [0.50] |
| 12, 14, 16 | 202C642 | 17.5 [0.69] |
| 16, 18, 20, 22 | 202C653 | 22.4 [0.88] |
| 24 | 202C663 | 22.9 [0.90] |





Catalog 1654025
Revised 3-13

www.te.com

Dimensions are shown for reference purposes only. Specifications subject to change.

Dimensions are in millimeters unless otherwise specified.

USA: +1 800 522 6752
Asia Pacific: +86 0 400 820 6015
UK: +44 800 267 666

For additional support numbers please visit www.te.com

## Code 54 MIL-C-5015 (MS3400), MIL-C-26482 Series 2, MIL-C-83723 Series I and III, MIL-C-81703 Series III (Continued)

### CRES-Lock Adapters (USA)
### BND Adapters (Europe)

### Code 54 Band Strap Adapter

**Notes:**
1. This product is designed to terminate a braided cable shield by means of a band strap and a heat shrinkable lipped boot to a connector.
2. See CH00-0250-016 for ordering information, modifications and additional dimensions.
3. See drawing BND-XX25S for band strap dimensions and information.
4. Adapter to be permanently marked with code identification number and full part number (e.g. 06090-BND54AB00-1812). Band strap shall bear no part marking.
5. All entry sizes are shown in Table II. Maximum entry sizes are as shown in Table I. For larger entry sizes than the maximum, a Type II adapter may be supplied. See CH00-0250-016 for further details.

**For additional codes available, contact TE.**

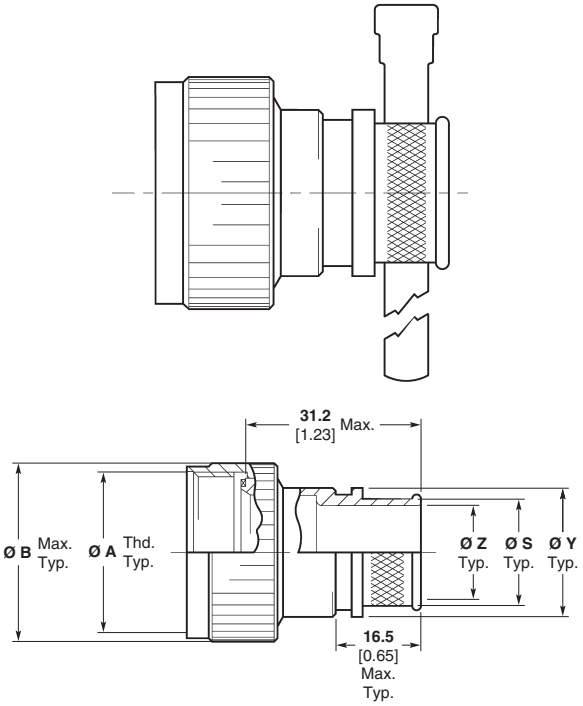


**Straight Adapter**
**Code 00**

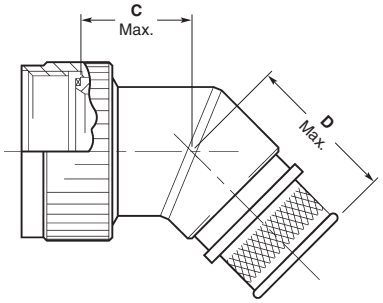


**45° Adapter**
**Code 45**

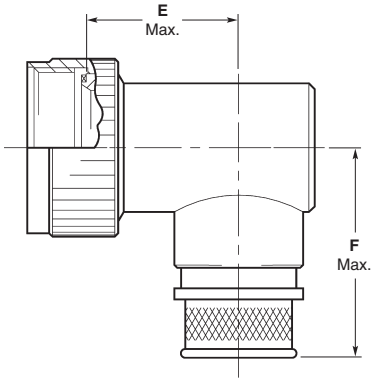


**90° Adapter**
**Code 90**

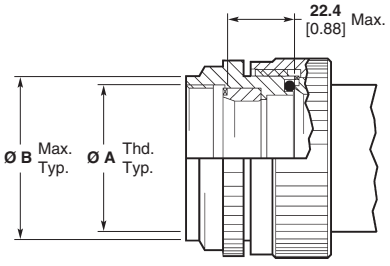


**Type II Modification**
**(See Note 5)**

| Available in: | Americas | Europe | Asia Pacific |
|---|---|---|---|
| | ■ | ■ | ■ |



Catalog 1654025
Revised 3-13

www.te.com

Dimensions are shown for reference purposes only. Specifications subject to change.

Dimensions are in millimeters unless otherwise specified.

USA: +1 800 522 6752
Asia Pacific: +86 0 400 820 6015
UK: +44 800 267 666

For additional support numbers please visit www.te.com

## Code 54 MIL-C-5015 (MS3400), MIL-C-26482 Series 2, MIL-C-83723 Series I and III, MIL-C-81703 Series III (Continued)

**CRES-Lock Adapters (USA)**
**BND Adapters (Europe)**
(continued)

**Code 54 Band Strap Adapter** (Continued)

**Table I**

| Order Number | Shell Size Series[2] | Shell Size Series[3] | Entry Size Max. Type I[1] | Ø A Unified Thread Class 2B | Ø B Max. | Ø B Max.[4] | C Max. | D Max. | F Max. |
|---|---|---|---|---|---|---|---|---|---|
| 08 | — | 08 | 04 | 0.5000–20 UNF | **15.7** 0.67 | **22.6** 0.89 | **19.0** 0.75 | **26.2** 1.03 | **31.0** 1.22 |
| 10 | — | 10 | 06 | 0.6250–24 UNEF | **18.5** 0.73 | **25.7** 1.01 | **19.6** 0.77 | **26.7** 1.05 | **32.5** 1.28 |
| 12 | 7 | 12 | 08 | 0.7500–20 UNEF | **21.8** 0.86 | **29.0** 1.14 | **20.3** 0.80 | **27.2** 1.07 | **34.3** 1.35 |
| 14 | 12 | 14 | 09 | 0.8750–20 UNEF | **24.9** 0.98 | **32.0** 1.26 | **20.9** 0.82 | **27.7** 1.09 | **35.6** 1.40 |
| 16 | 19 | 16 | 11 | 0.9375–20 UNEF | **28.2** 1.11 | **35.3** 1.39 | **21.3** 0.84 | **28.4** 1.12 | **37.1** 1.46 |
| 18 | 27 | 18 | 12 | 1.0000–20 UNEF | **31.0** 1.22 | **38.4** 1.51 | **21.8** 0.86 | **28.7** 1.13 | **38.9** 1.53 |
| 20 | 37 | 20 | 14 | 1.1875–18 UNEF | **34.3** 1.35 | **41.7** 1.64 | **22.4** 0.88 | **29.5** 1.16 | **40.4** 1.59 |
| 22 | — | 22 | 16 | 1.3125–18 UNEF | **37.3** 1.47 | **44.7** 1.76 | **23.1** 0.91 | **30.0** 1.18 | **41.9** 1.65 |
| 24 | — | 24 | 18 | 1.4375–18 UNEF | **40.5** 1.59 | **48.0** 1.89 | **23.6** 0.93 | **30.7** 1.21 | **43.4** 1.71 |
| 28 | — | 28 | 22 | 1.7500–18 UNS | **50.0** 1.97 | **54.4** 2.14 | **24.9** 0.98 | **31.8** 1.25 | **48.3** 1.90 |
| 32 | — | 32 | 26 | 2.0000–18 UNS | **56.4** 2.22 | **61.0** 2.40 | **26.2** 1.03 | **33.3** 1.31 | **51.6** 2.03 |
| 36 | — | 36 | 28 | 2.2500–16 UN | **62.7** 2.47 | **67.1** 2.64 | **27.4** 1.08 | **34.3** 1.35 | **54.6** 2.15 |
| 40 | — | 40 | 32 | 2.5000–16 UN | **69.1** 2.72 | **73.4** 2.89 | **28.4** 1.12 | **35.6** 1.40 | **57.7** 2.27 |
| 44 | — | 44 | 34 | 2.75000–16 UN | **75.4** 2.97 | **79.8** 3.14 | **29.7** 1.17 | **36.8** 1.45 | **61.0** 2.40 |
| 48 | — | 48 | 34 | 3.0000–16 UN | **81.8** 3.22 | **86.1** 3.39 | **31.0** 1.22 | **38.1** 1.50 | **64.0** 2.52 |
| 61 | 61 | — | 18 | 1.5000–18 UNEF | **41.9** 1.65 | **47.8** 1.88 | **23.9** 0.94 | **30.7** 1.21 | **44.2** 1.74 |

1. All entry sizes are shown in Table II. Maximum entry sizes are as shown in Table I. For larger entry sizes than the maximum, a Type II adapter may be supplied. See CH00-0250-016 for further details.
2. Adapter mates to: MIL-C-81703 Series III, MS3424, MS3446, MS3464, MS3467, MS3468, Class E and L Connectors.
3. Adapter mates to MIL-C-5015G, MS3400 Series, Class D, E, K, L, U and W: MS3400, MS3401, MS3404, MS3406, MS3450, MS3451, MS3454, MS3456, MS3470, MS3471, MS3472, MS3474, MS3475, MS3476, MIL-C-83723 Series II, Class A and L. MIL-C-83723, /14, /36, /37, /38, /39, /40, /41, /42, /43, /48, /49, /65, /66, /67, /68, /69, /70, /71, /72, /73, /74, /75, /76, /77, /78, /82, /83, /84, /85, /86, /87, /91, /92, /95, /97, and /98 Connectors, MS3155 controlled interfaces.
4. These dimensions apply if a self-locking coupling nut is used, modification code "S".

**Table II**

| Entry Size | Ø Z +0.25/-0.50 [+0.010/-0.020] | Ø S ±0.51 [±0.020] | Ø Y ±0.38 [±0.015] | E Max. |
|---|---|---|---|---|
| 03 | **4.75** 0.188 | **7.92** 0.312 | **11.10** 0.438 | **16.3** 0.64 |
| 04 | **6.35** 0.250 | **9.52** 0.375 | **12.70** 0.500 | **16.3** 0.64 |
| 05 | **7.92** 0.312 | **11.12** 0.438 | **14.30** 0.563 | **17.3** 0.68 |
| 06 | **9.52** 0.375 | **12.70** 0.500 | **15.88** 0.625 | **17.8** 0.70 |
| 07 | **11.12** 0.438 | **14.30** 0.562 | **17.50** 0.689 | **18.8** 0.74 |
| 08 | **12.70** 0.500 | **15.88** 0.625 | **19.05** 0.750 | **19.8** 0.78 |
| 09 | **14.30** 0.562 | **17.50** 0.688 | **20.65** 0.813 | **20.3** 0.80 |
| 10 | **15.88** 0.625 | **19.05** 0.750 | **22.23** 0.875 | **20.8** 0.82 |
| 11 | **17.50** 0.688 | **20.65** 0.812 | **23.80** 0.938 | **21.8** 0.86 |
| 12 | **19.05** 0.750 | **22.23** 0.875 | **25.40** 1.000 | **22.9** 0.90 |
| 13 | **20.65** 0.812 | **23.83** 0.938 | **27.00** 1.063 | **23.9** 0.94 |
| 14 | **22.23** 0.875 | **25.40** 1.000 | **30.16** 1.189 | **24.4** 0.96 |

**Table II** (Continued)

| Entry Size | Ø Z +0.25/-0.50 [+0.010/-0.020] | Ø S ±0.51 [±0.020] | Ø Y ±0.38 [±0.015] | E Max. |
|---|---|---|---|---|
| 15 | **23.83** 0.938 | **27.00** 1.062 | **31.75** 1.250 | **24.9** 0.98 |
| 16 | **25.40** 1.000 | **28.58** 1.125 | **33.34** 1.313 | **25.9** 1.02 |
| 18 | **28.58** 1.125 | **31.75** 1.250 | **36.51** 1.438 | **28.3** 1.11 |
| 20 | **31.75** 1.250 | **34.90** 1.375 | **39.69** 1.563 | **29.8** 1.17 |
| 22 | **34.90** 1.375 | **38.10** 1.500 | **42.86** 1.688 | **31.3** 1.23 |
| 24 | **38.10** 1.500 | **41.28** 1.625 | **46.83** 1.844 | **33.8** 1.33 |
| 26 | **41.28** 1.625 | **44.45** 1.750 | **49.61** 1.953 | **35.1** 1.38 |
| 28 | **44.45** 1.750 | **47.63** 1.875 | **52.78** 2.078 | **36.3** 1.43 |
| 30 | **47.65** 1.875 | **50.80** 2.000 | **56.36** 2.219 | **37.8** 1.49 |
| 32 | **50.80** 2.000 | **54.00** 2.125 | **59.53** 2.344 | **39.6** 1.56 |
| 34 | **54.00** 2.125 | **57.15** 2.250 | **62.71** 2.469 | **41.1** 1.62 |





Catalog 1654025
Revised 3-13

www.te.com

Dimensions are shown for reference purposes only. Specifications subject to change.

Dimensions are in millimeters unless otherwise specified.

USA: +1 800 522 6752
Asia Pacific: +86 0 400 820 6015
UK: +44 800 267 666

For additional support numbers please visit www.te.com

## Code 76 BS 9522 F0017 (Pattern 105)

### Spin-Coupling Adapters

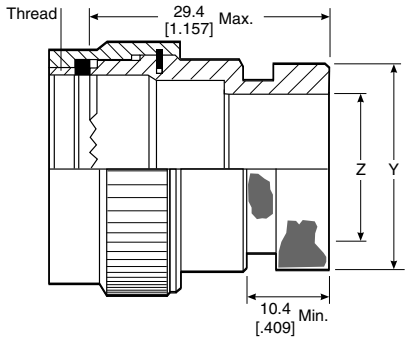


### Table of Dimensions

| Order No. | Shell Size | Thread | Dimensions | |
|---|---|---|---|---|
| | | | Y Max. | Z Min. |
| 08 | 8 | .438-28 UNEF | 13.54 [0.53] | 6.9 [0.27] |
| 10 | 10 | .562-24 UNEF | 15.37 [0.61] | 9.9 [0.39] |
| 12 | 12 | .688-24 UNEF | 19.66 [0.77] | 13.4 [0.53] |
| 14 | 14 | .812-20 UNEF | 21.29 [0.84] | 15.9 [0.63] |
| 16 | 16 | .938-20 UNEF | 24.47 [0.96] | 18.9 [0.74] |
| 18 | 18 | 1.062-18 UNEF | 26.47 [1.04] | 21.4 [0.84] |
| 20 | 20 | 1.188-18 UNEF | 30.92 [1.22] | 23.9 [0.94] |
| 22 | 22 | 1.312-18 UNEF | 34.42 [1.36] | 27.4 [1.08] |
| 24 | 24 | 1.438-18 UNEF | 36.40 [1.44] | 29.9 [1.18] |

### Molded Part Selection Guide (Spin-Coupling)

| Order No. | Standard K Parts | | | Low-Profile D Parts | | |
|---|---|---|---|---|---|---|
| | Straight Part No. | 90° Part No. | Cable OD (Min.) | Straight Part No. | 90° Part No. | Cable OD (Min.) |
| 03, 08 | 202W232 | — | 4.3 [0.19] | — | — | — |
| 03, 08 | 202K121 | 222K121 | 5.6 [0.22] | 202D211 | 222D211 | 6.4 [0.25] |
| 10, 11 | 202K132 | 222K132 | 5.9 [0.23] | 202D221 | 222D221 | 7.4 [0.29] |
| 12, 14 | 202K142 | 222K142 | 7.1 [0.28] | 202D232 | 222D232 | 8.4 [0.33] |
| 16, 18 | 202K153 | 222K152 | 8.4 [0.33] | 202D242 | 222D242 | 9.7 [0.38] |
| 20, 22 | 202K163 | 222K163 | 9.9 [0.39] | 202D253 | 222D253 | 10.5 [0.41] |
| 24, 28, | 202K174 | 222K174 | 15.7 [0.62] | 202D263 | 222D263 | 12.2 [0.48] |
| 32, 36 | 202K185 | 222K185 | 16.8 [0.66] | 202D274 | 222D274 | 14.3 [0.56] |

### Uniboot Parts

| Order No. | Part No. | Cable OD (Min.) |
|---|---|---|
| 03, 08 | 202C611 | 4.8 [0.19] |
| 10, 11, 12 | 202C621 | 8.1 [0.32] |
| 14, 16 | 202C632 | 12.7 [0.50] |
| 18, 20 | 202C642 | 17.5 [0.69] |
| 22, 24 | 202C653 | 22.4 [0.88] |

| Available in: | Americas | Europe | Asia Pacific |
|---|---|---|---|
| | ■ | ■ | ■ |



Catalog 1654025
Revised 3-13

www.te.com

Dimensions are shown for reference purposes only. Specifications subject to change.

Dimensions are in millimeters unless otherwise specified.

USA: +1 800 522 6752
Asia Pacific: +86 0 400 820 6015
UK: +44 800 267 666

For additional support numbers please visit www.te.com

## Code 76 BS 9522 F0017 (Pattern 105) (Continued)

### Tinel-Lock Adapters

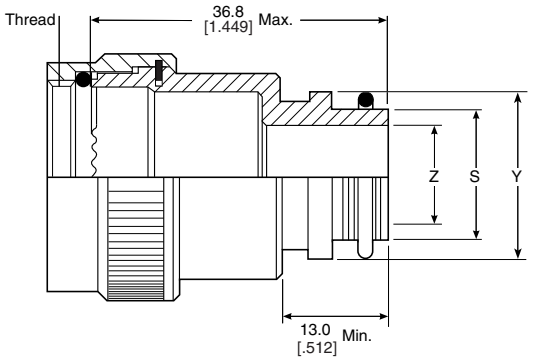


TXR76XX00-XXXXXX

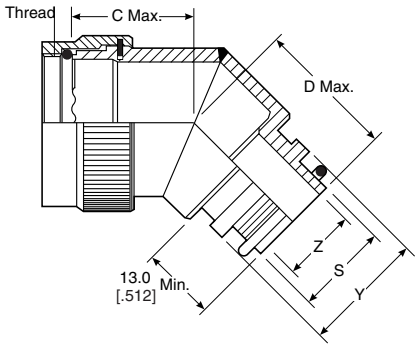


TXR76XX45-XXXXXX

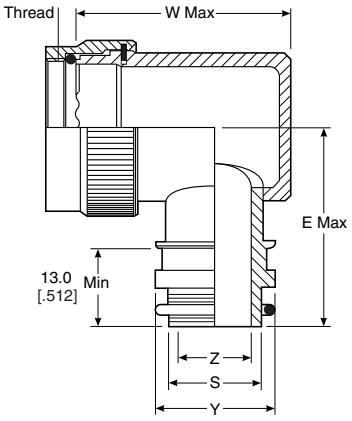


TXR76XX90-XXXXXX

### Table of Dimensions

| Order No. | Shell Size | Max. Entry Size Type 1* | Thread | Dimensions | | |
|---|---|---|---|---|---|---|
| | | | | C Max. | D Max. | E Max. |
| 08 | 8 | 04 | .438-28 UNEF | 18.0 [.74] | 21.3 [.87] | 26.7 [1.05] |
| 10 | 10 | 07 | .562-24 UNEF | 18.8 [.76] | 22.1 [.90] | 28.2 [1.11] |
| 12 | 12 | 08 | .688-24 UNEF | 19.3 [.79] | 22.9 [.92] | 30.2 [1.19] |
| 14 | 14 | 10 | .812-20 UNEF | 20.1 [.82] | 23.4 [.95] | 31.8 [1.25] |
| 16 | 16 | 12 | .938-20 UNEF | 20.8 [.84] | 24.1 [.97] | 33.5 [1.32] |
| 18 | 18 | 12 | 1.062-18 UNEF | 21.3 [.87] | 24.6 [1.00] | 35.1 [1.38] |
| 20 | 20 | 16 | 1.188-18 UNEF | 22.1 [.89] | 25.4 [1.02] | 36.6 [1.44] |
| 22 | 22 | 18 | 1.312-18 UNEF | 22.6 [.92] | 25.9 [1.05] | 38.1 [1.50] |
| 24 | 24 | 20 | 1.438-18 UNEF | 23.4 [.97] | 26.7 [1.07] | 39.4 [1.55] |

*For larger than maximum type 1 entry sizes, a two-piece adapter will be supplied. Contact TE for information.

| Available in: | Americas | Europe | Asia Pacific |
|---|---|---|---|
| | ■ | ■ | ■ |





Catalog 1654025
Revised 3-13

www.te.com

Dimensions are shown for reference purposes only. Specifications subject to change.

Dimensions are in millimeters unless otherwise specified.

USA: +1 800 522 6752
Asia Pacific: +86 0 400 820 6015
UK: +44 800 267 666

For additional support numbers please visit www.te.com

## Code 76 BS 9522 F0017 (Pattern 105) (Continued)

### Tinel-Lock Adapters
(continued)

### Entry Size Dimensions

| Entry Size | Dimensions | | | |
|---|---|---|---|---|
| | Z +0.25–0.5 | S Diameter (Min.–Max.) | Y ±0.38 | W Max. |
| 04 | 6.35 [0.25] | 9.39—9.56 [0.37—0.38] | 13.97 [1.22] | 31.0 [0.55] |
| 05 | 7.92 [0.31] | 10.97—11.13 [0.43—0.44] | 15.54 [1.29] | 32.8 [0.61] |
| 06 | 9.52 [0.37] | 12.57—12.73 [0.49—0.50] | 17.14 [1.35] | 34.3 [0.67] |
| 07 | 11.09 [0.44] | 14.12—14.31 [0.55—0.56] | 18.71 [1.41] | 35.8 [0.74] |
| 08 | 12.7 [0.50] | 15.72—15.91 [0.62—0.63] | 20.32 [1.47] | 37.3 [0.80] |
| 10 | 15.87 [0.62] | 18.84—19.11 [0.74—0.75] | 23.49 [1.60] | 40.6 [0.92] |
| 12 | 19.05 [0.75] | 22.02—22.28 [0.87—0.88] | 26.67 [1.72] | 43.7 [1.05] |
| 14 | 22.23 [0.88] | 25.17—25.46 [0.99—1.00] | 29.84 [1.85] | 47.0 [1.17] |
| 16 | 25.4 [1.00] | 28.34—28.63 [1.12—1.13] | 33.02 [1.97] | 50.0 [1.30] |
| 18 | 28.57 [1.12] | 31.52—31.81 [1.24—1.25] | 36.19 [2.10] | 53.3 [1.42] |
| 20 | 31.75 [1.25] | 34.69—34.98 [1.37—1.38] | 39.37 [1.55] | 53.8 [2.19] |

### Molded Part Selection Guide (Tinel)

| Tinel-Lock Entry Size | Standard K Parts | | | Low-Profile D Parts | | |
|---|---|---|---|---|---|---|
| | Straight Part No. | 90° Part No. | Cable OD (Min.) | Straight Part No. | 90° Part No. | Cable OD (Min.) |
| 04 | 202K232 | — | 3.3 [0.1] | — | — | — |
| 04 | 202W232 | — | 4.3 [0.2] | — | — | — |
| 04 | 202K121 | 222K121 | 5.6 [0.2] | 202D211 | 222D211 | 6.4 [0.3] |
| 05, 06 | 202K132 | 222K132 | 5.9 [0.2] | 202D221 | 222D221 | 7.4 [0.3] |
| 07, 08 | 202K142 | 222K142 | 7.1 [0.3] | 202D232 | 222D232 | 8.4 [0.3] |
| 10, 12 | 202K153 | 222K152 | 8.4 [0.3] | 202D242 | 222D242 | 9.7 [0.4] |
| 14, 16 | 202K163 | 222K163 | 9.9 [0.4] | 202D253 | 222D253 | 10.5 [0.4] |
| 18, 20, 22 | 202K174 | 222K174 | 15.7 [0.6] | 202D263 | 222D263 | 12.2 [0.5] |
| 24 | 202K185 | 222K185 | 16.8 [0.7] | — | — | — |

### Uniboot Parts

| Tinel-Lock Entry Size | Part No. | Cable OD (Min.) |
|---|---|---|
| 04 | 202C611 | 4.8 [0.19] |
| 05, 06, 07 | 202C621 | 8.1 [0.32] |
| 08, 10, 12 | 202C632 | 12.7 [0.50] |
| 12, 14, 16 | 202C642 | 17.5 [0.69] |
| 16, 18, 20, 22 | 202C653 | 22.4 [0.88] |
| 24 | 202C663 | 22.9 [0.90] |



Catalog 1654025
Revised 3-13

www.te.com

Dimensions are shown for reference purposes only. Specifications subject to change.

Dimensions are in millimeters unless otherwise specified.

USA: +1 800 522 6752
Asia Pacific: +86 0 400 820 6015
UK: +44 800 267 666

For additional support numbers please visit www.te.com

## Raychem FlexiScreen Backshells

### FlexiScreen Backshells

The FlexiScreen high performance backshells are designed to provide EMC protection for both commercial and military applications. FlexiScreen backshells represent a significant improvement over pig-tail termination methods by providing 360˚ EMC shielding on the termination area of each individual cable. FlexiScreen backshell terminations can be installed to allow the cable bundle to be installed at various angles, such as 30 & 45˚, using a single backshell design.

FlexiScreen backshells can be installed to allow the cable bundle to be formed at various angles, such as 90˚ and 45˚, using a single backshell design.

FlexiScreen backshells are a cost effective solution while maintaining low weight.

### Product Facts

- **Cost effective solution**
- **Capitalizes on proven performance of HexaShield adapter components**
- **Flexible and variable bending configurations**
- **Light weight**
- **Repairable**
- **Out performs commonly used alternatives**

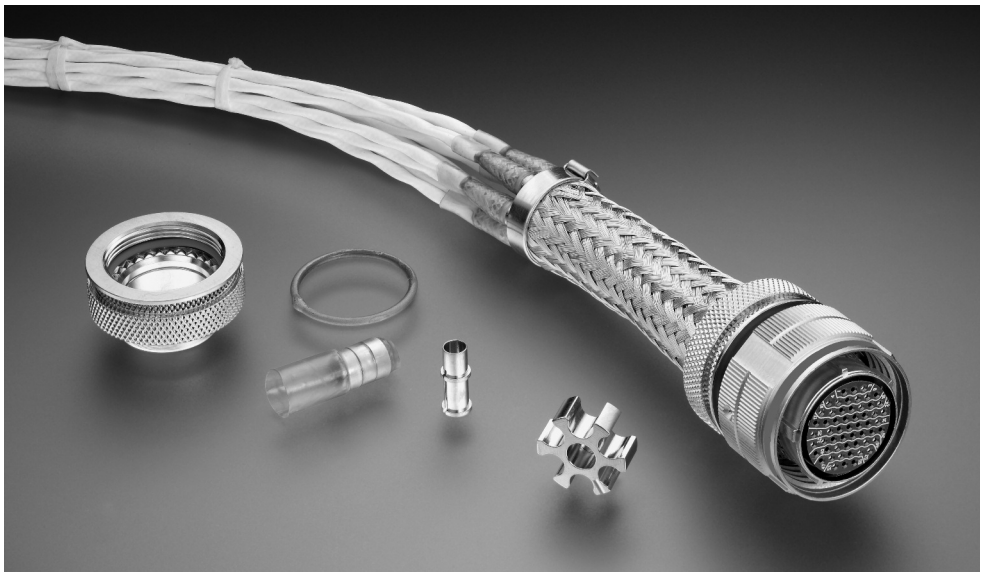

#### Applications

Designed to be mounted on MIL-DTL-38999, 83723, 26482, 5015, or commonly used connectors

Aerospace, Defense, Ground Vehicles, Control Circuits — where excellent EMI and shielding performance is required

#### Standards & Specs

Finish Types: SAE-AMS-PQ-P-416 cadmium olive drab, SAE-AMS-C-26074 Class 3, grade B Electroless Nickel (others available upon request)

TE Specification RB-117

RPIP-696-21 Installation Procedure for FlexiScreen backshells

#### Kit Contents

1 backshell assembly

1 multi-position star

1 band strap

#### Electrical

DC resistance:
<5.0 mΩ braid to backshell per SAE-AS85049
<10.0 mΩ braid to cable braids per RB-117

Shielding effectiveness:
Complies with ANSI/NEMA EC 61-2005

Lightning strike:
No damage or degradation of components. Tested per RTCA/DO-160F, Section 22

#### Physical or Other Properties

Vibration:
Tested per EAI-364-28, test condition VI, Letter J

Mechanical shock:
Tested per EAI-364-27, test condition D

Cable pull-out:
Tested per MIL-STD-1344, method 2009-1, test condition A

Operating temperature:
-65˚ to +150˚





Catalog 1654025
Revised 3-13

www.te.com

Dimensions are shown for reference purposes only. Specifications subject to change.

Dimensions are in millimeters unless otherwise specified.

USA: +1 800 522 6752
Asia Pacific: +86 0 400 820 6015
UK: +44 800 267 666

For additional support numbers please visit www.te.com

## Raychem FlexiScreen Backshells (Continued)

### Part Numbering System

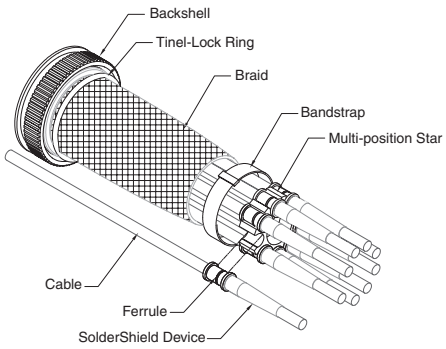


FLS40 – A B 10 A – A

Star Configuration (number of ferrule positions)
A = Standard star
B = Star one size smaller
C = Star one size larger

Braid - (Braid supplied 3" (76mm) as standard length)
A = Tin-plated copper, 36 awg, single braid
B = Tin-plated copper, 36 awg, double braid
C = Nickel plated copper, 36 awg, single braid
D = Nickel plated copper, 36 awg, double braid

Order Number

Finish Type:
B = Cadmium olive drab to SAE-AMS-PQ-P-416
C = Electroless nickel to SAE-AMS-C-26074 Class 3, Grade B

Material Code:
A = Aluminum alloy
K = Stainless steel

Connector Code Number:
FLS40 = MIL-DTL-38999 Series III and IV
FLS41 = MIL-DTL-38999 Series I and II
FLS 54 = MIL-DTL-5015H (now SAE-AS50151), MIL-DTL-26482 series 2, M83723 series 1 and III, MIL-DTL-81703 (now SAE-AS81703), and all connectors with MS3155 controlled accessory interface.

Also available for other connector codes. Please consult TE for further information.

### FLS40

| ORDER NO. | SHELL SIZE | ENTRY SIZE | ØZ +0.10 −.020 | ØA METRIC THREAD CLASS 6H | ØB MAX | STAR CONFIGURATION (NUMBER OF FERRULE POSITIONS) |
|---|---|---|---|---|---|---|
| 10 | 11 | 07 | 11.09 [0.437] | M15 X 1 | 21.25 [0.84] | A= 2<br>B= N/A<br>C= 3 |
| 12 | 13 | 08 | 12.70 [0.500] | M18 X 1 | 24.50 [0.97] | A= 3<br>B= 2<br>C= 5 |
| 14 | 15 | 10 | 15.87 [0.625] | M22 X 1 | 29.00 [1.15] | A= 5<br>B= 3<br>C= 6 |
| 16 | 17 | 12 | 19.05 [0.750] | M25 X 1 | 33.50 [1.32] | A= 6<br>B= 5<br>C= 7 |
| 18 | 19 | 14 | 22.23 [0.875] | M28 X 1 | 37.50 [1.48] | A= 7<br>B= 6<br>C= 9 |
| 20 | 21 | 16 | 25.40 [1.00] | M31 X 1 | 39.50 [1.56] | A= 9<br>B= 7<br>C= 10 |
| 22 | 23 | 18 | 28.57 [1.125] | M34 X 1 | 42.00 [1.66] | A= 10<br>B= 9<br>C= 13 |
| 24 | 25 | 20 | 34.93 [1.375] | M37 X 1 | 45.00 [1.78] | A= 12<br>B= 10<br>C= 17 |

### FLS41

| ORDER NO. | SHELL SIZE | | ENTRY SIZE | ØZ +0.10 −.020 | ØA THREAD RH CLASS 2B | ØB MAX | STAR CONFIGURATION (NUMBER OF FERRULE POSITIONS) |
|---|---|---|---|---|---|---|---|
| | SER 1 | SER 2 | | | | | |
| 10 | 11 | 10 | 06 | 9.52 [.375] | .562-24 UNEF | 22.2 [.875] | A= 2<br>B= N/A<br>C= 3 |
| 12 | 13 | 12 | 08 | 12.70 [.500] | .688-24 UNEF | 25.4 [1.00] | A= 3<br>B= 2<br>C= 5 |
| 14 | 15 | 14 | 10 | 15.87 [.625] | .812-20 UNEF | 30.2 [1.188] | A= 5<br>B= 3<br>C= 6 |
| 16 | 17 | 16 | 12 | 19.05 [.750] | .938-20 UNEF | 33.3 [1.312] | A= 6<br>B= 5<br>C= 7 |
| 18 | 19 | 18 | 12 | 19.05 [.750] | 1.062-18 UNEF | 36.5 [1.438] | A= 7<br>B= 6<br>C= 9 |
| 20 | 21 | 20 | 14 | 22.23 [.875] | 1.188-18 UNEF | 39.6 [1.562] | A= 9<br>B= 7<br>C= 10 |
| 22 | 23 | 22 | 16 | 25.40 [1.00] | 1.312-18 UNEF | 42.9 [1.688] | A= 10<br>B= 9<br>C= 13 |
| 24 | 25 | 24 | 18 | 28.57 [1.125] | 1.438-18 UNEF | 45.2 [1.781] | A= 12<br>B= 10<br>C= 17 |

### FLS54

| ORDER NO. | SHELL SIZE | ENTRY SIZE | ØZ +0.10 −.020 | ØA THREAD CLASS 6H | ØB MAX | STAR CONFIGURATION (NUMBER OF FERRULE POSITIONS) |
|---|---|---|---|---|---|---|
| 10 | 10, 10S & 10SL | 06 | 9.52 [.375] | .6250"-24 UNEF | 20.40 [0.80] | A= 2<br>B= N/A<br>C= 3 |
| 12 | 12 & 12S | 08 | 12.70 [.500] | .7500"-20 UNEF | 23.80 [0.93] | A= 3<br>B= 2<br>C= 5 |
| 14 | 14 & 14S | 08 | 12.70 [.500] | .8750"-20 UNEF | 27.00 [1.06] | A= 5<br>B= 3<br>C= 6 |
| 16 | 16 & 16S | 10 | 18.87 [.625] | 1.0000"-20 UNEF | 31.45 [1.23] | A= 6<br>B= 5<br>C= 7 |
| 18 | 18 | 12 | 19.05 [.750] | 1.0625"-18 UNEF | 33.25 [1.30] | A= 7<br>B= 6<br>C= 9 |
| 20 | 20 | 14 | 22.22 [.875] | 1.1875"-18 UNEF | 36.45 [1.43] | A= 9<br>B= 7<br>C= 10 |
| 22 | 22 | 16 | 25.40 [1.000] | 1.3125"-18 UNEF | 39.60 [1.55] | A= 10<br>B= 9<br>C= 13* |
| 24 | 24 | 18 | 28.58 [1.125] | 1.4375"-18 UNEF | 42.80 [1.68] | A= 12<br>B= 10<br>C= 17* |

* – STAR CONFIGURATION USES 3 PIECE STAR (1 STAR, 2 HALF STARS)

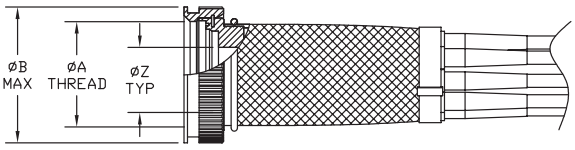




Catalog 1654025
Revised 3-13

www.te.com

Dimensions are shown for reference purposes only. Specifications subject to change.

Dimensions are in millimeters unless otherwise specified.

USA: +1 800 522 6752
Asia Pacific: +86 0 400 820 6015
UK: +44 800 267 666

For additional support numbers please visit www.te.com

## Introduction

### Product Facts

- Superior EMC/EMI Shielding Performance
- Simple installation
- Easy reentry
- Simplified maintenance and repair
- Excellent mechanical and environmental resistance
- Efficient strain relief
- Flexibility
- Versatility

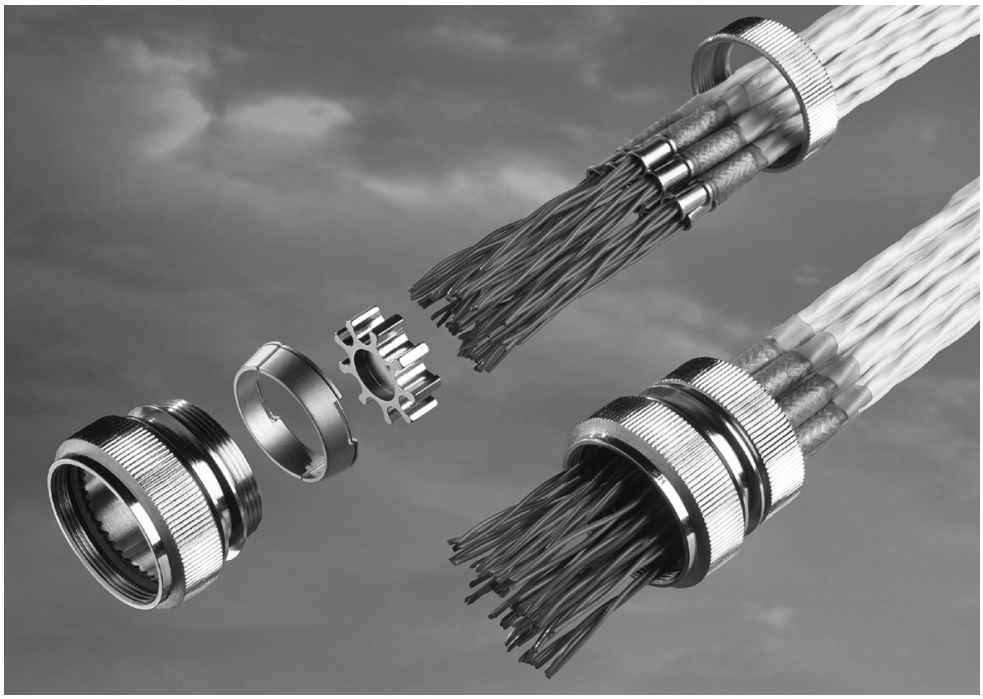

### Applications

TE, a longtime leader in harnessing technology, has written a new chapter in EMC shielding with the introduction of the Raychem brand HexaShield EMC adapter.

Designed to provide EMC protection solutions for both commercial and military applications, HexaShield adapters represent a significant improvement over pigtail termination methods. By providing 360-degree EMC shielding on the termination area of each individual cable, HexaShield adapters provide outstanding shielding effectiveness.

HexaShield adapters are simple to install, easy to maintain, and dependably resistant to mechanical and environmental stresses.

### Principal points and features

- Easy reentry: To insert or remove ferrules from the HexaShield adapter, simply loosen the back nut.
- Superior protection: No degradation of shielding performance.
- Up to four shielded cables accommodated by each ferrule.
- Mechanical and environmental protection equal to backshells complying with MIL-C-85049 Category 3B.
- Strain relief on each individual cable.
- Weight reduction, by possibly eliminating the need for overall shielding.
- Compact size - not exceeding outer diameter of connector.
- Available in straight, 45° and 90° angles, as well as swept and long bodies.

### Simple assembly and installation

1. Solder cable or wire shield to a ferrule with a heat-shrinkable SolderShield terminator.
2. Clip ferrule into one of the grounding star cavities.
3. Secure the back nut of the HexaShield adapter so that the conic ring assembly automatically compresses the ferrules.

**Available in:**

| | |
|---|---|
| Americas | ■ |
| Europe | ■ |
| Asia Pacific | ■ |

### Designed to corresponding connector specifications

| Two Platings Available | TE Product Specifications |
|---|---|
| Electroless nickel (MIL-DTL-26074) | RB-110 and RB-114 |
| Olive drab cadmium (QQ-P-416 Type II Class 3) | — |

*Contact TE for additional platings.

### Installation Procedures

| | | |
|---|---|---|
| Installation procedure for HET-A-02X and HET-A-04X (RPIP-696-00) | Installation procedure for HET-03X (RPIP-696-03) | General procedure for cylindrical connectors, right-angle body (RPIP-696-07) |
| General procedure for ARINC 600 Size II connectors (RPIP-696-01) | General procedure for cylindrical connectors, straight body (RPIP-696-04) | — |
| General procedure for ARINC 600 Size III connectors (RPIP-696-02) | — | — |
| RPIP-696-13 HexaShield Filling Factors | | |





Catalog 1654025
Revised 3-13

www.te.com

Dimensions are shown for reference purposes only. Specifications subject to change.

Dimensions are in millimeters unless otherwise specified.

USA: +1 800 522 6752
Asia Pacific: +86 0 400 820 6015
UK: +44 800 267 666

For additional support numbers please visit www.te.com

## Kit Descriptions

### Hexashield Adapters for Circular Connectors: Straight, 45°and 90° Assemblies

| Item | Description |
|---|---|
| 1 | Straight adapter assembly |
| 2 | Conic ring assembly |
| 3 | Star<br>Plain (Standard)<br>Drilled (Option)<br>Split (Option) _ |
| 4 | Straight adapter assembly - “L” version<br>- nominally 0.5" [12.7] longer body |
| 5 | 45° adapter assembly - welded |
| 6 | 45° adapter assembly - swept |
| 7 | 90° adapter assembly - welded |
| 8 | 90° adapter assembly - swept<br>Standard products shown.<br>Variants available on request.<br><br>Split star assemblies are shown<br>on relevant customer drawings where applicable. |

| Item | HexaShield Version |
|---|---|
| -1 | Back Nut |
| -2 | Tinel adapter assembly<br>Tinel-Lock ring for single braid |
| -3 | Bandstrap adapter assembly |
| -C | Conduit adapter |

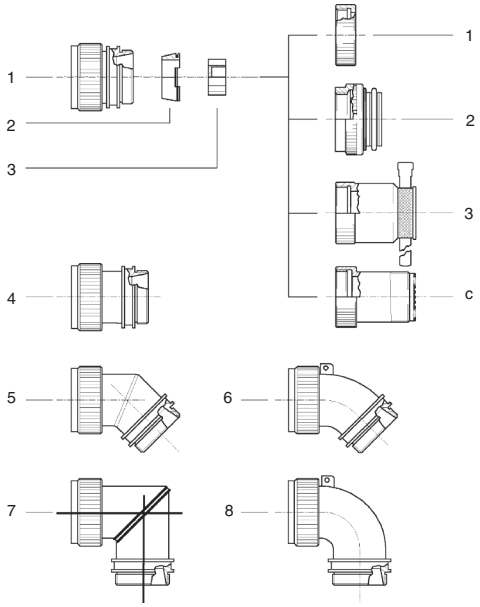


### HexaShield Adapters for ARINC 404/600 Connectors: Sizes 1, 2, 3 and 4 Assemblies

| Item | Description |
|---|---|
| 1 | Left side support |
| 2 | Right side support |
| 3 | Retention bars |
| 4 | Body assemblies<br>Body<br>Holding nut<br>Conic ring assembly<br>Star _<br>Back nut |
| 5 | Cavity plug assemblies<br>Plug<br>Holding nut |
| 6 | Pan head screws - 4-40 UNC |
| 7 | Spring washers |

ARINC 600 Size 2 shown
Stars are available as plain, drilled or split.
See relevant customer drawings for further information

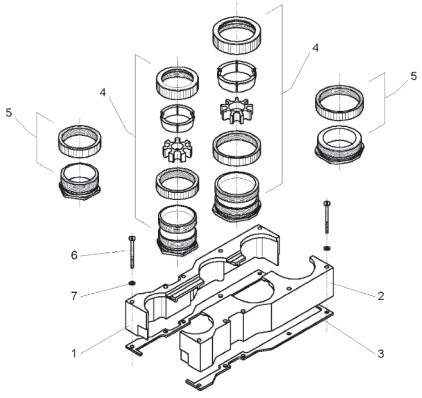




Catalog 1654025
Revised 3-13

www.te.com

Dimensions are shown for reference purposes only. Specifications subject to change.

Dimensions are in millimeters unless otherwise specified.

USA: +1 800 522 6752
Asia Pacific: +86 0 400 820 6015
UK: +44 800 267 666

For additional support numbers please visit www.te.com

## Ordering Information

### Part Numbering for Standard Products

### HexaShield Adapter for Circular Connectors

**HEXYY L -AY -00 S -YY -AY -Y -DS**

**Drilled Star:**
See applicable customer drawing for star options

**Type of Back Nut:**
1 = Standard back nut
2 = Clamping nut for tinel ring (for overbraid protection)
3 = Clamping nut with bandstrap
C = Clamping nut for conduit applicator

Max. number of ferrules that can be accommodated
See applicable customer drawing for options

**Hexashield Size Code:**
See applicable customer drawing for order number (shell

S = Swept version

**Configuration:**
00 = Straight body
45 = 45 degree angle body
90 = 90 degree angle body

**Type of Plating:**
B = Cadmium plated
C = Electroless nickel

L = Long body
See applicable customer drawing for availability

**Connector Code Number:**
21 = MIL-C-26482 Series 1
40 = MIL-DTL-38999 Series 3 and 4
41 = MIL-DTL-38999 Series 1 and 2
54 = MIL-DTL-83723 Series 1 and 3
MIL-C-25482 Series 2





Catalog 1654025
Revised 3-13

www.te.com

Dimensions are shown for reference purposes only. Specifications subject to change.

Dimensions are in millimeters unless otherwise specified.

USA: +1 800 522 6752
Asia Pacific: +86 0 400 820 6015
UK: +44 800 267 666

For additional support numbers please visit www.te.com

## Ordering Information (Continued)

### HexaShield Adapter for Collins Connectors

**HEXDB-AC-00-A9-1**

00 = Straight body
90 = Right-angle body

### HexaShield Adapter for ARINC 600 Connectors

**HEXA6-AY-00-YY-AY-Y**

**Clamping nut version:**
1 = Clamping nut alone
2 = Clamping nut for tinel ring

**Number of ferrules:**
18 for ARINC 600 size II (A and B cavities)
25 for ARINC 600 size II (A, B and C cavities)
18 for ARINC 600 size III (A and B cavities)
See applicable customer drawing for options

**ARINC Connector Size:**
02 = ARINC 600 size II
03 = ARINC 600 size III

**Configuration:**
00 = Straight body
90 = Right-angle body

**Plating:**
B = Cadmium plated
C = Electroless nickel

Drilled Stars are standard on ARINC 600 adapters.

### Part Numbering of Ferrule Kits*

**HET-A-02X** for small-size cable with SolderShield terminator
**HET-A-03X** for connection of unshielded cables ferrules with heat-shrinkable tubing (no shield)
**HET-A-04X** for large-size cables with SolderShield terminator

**Type of Plating:**
B = Cadmium plated
C = Electroless nickel

**HEX07-AX** ferrule - solid blank for use when a HET-A is not needed

**Type of Plating:**
B = Cadmium plated
C = Electroless nickel

*Not all part numbers are standard; your local TE representative will assist you in selecting the appropriate standard product



Catalog 1654025
Revised 3-13

www.te.com

Dimensions are shown for reference purposes only. Specifications subject to change.

Dimensions are in millimeters unless otherwise specified.

USA: +1 800 522 6752
Asia Pacific: +86 0 400 820 6015
UK: +44 800 267 666

For additional support numbers please visit www.te.com

## EMC Performance

### Product Facts

- **Outperforms traditional pigtail termination, especially in HIRF performance**
- **Withstands 10-kA peak current lightning transients of SAE AE4L-87-3**

### Transfer Impedance

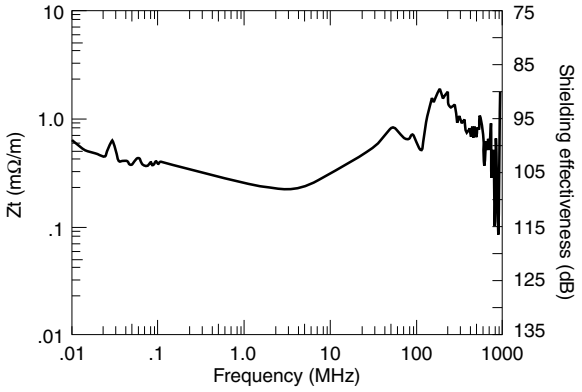


HexaShield size: 23

Cable: TE 5024H8424
(one cable installed)

Test method: CEI 96-1

### Protection Level

Generalized system performance (Actual system performance in any one test method may differ.)

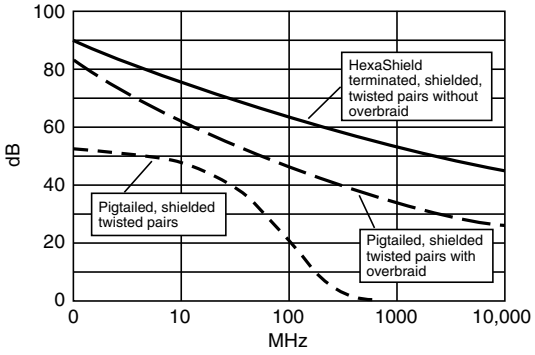


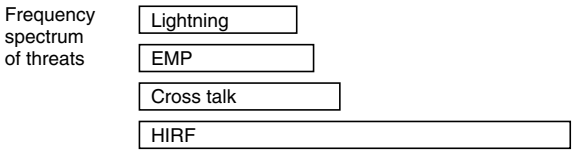


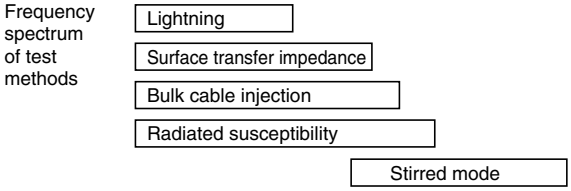






Catalog 1654025
Revised 3-13

www.te.com

Dimensions are shown for reference purposes only. Specifications subject to change.

Dimensions are in millimeters unless otherwise specified.

USA: +1 800 522 6752
Asia Pacific: +86 0 400 820 6015
UK: +44 800 267 666

For additional support numbers please visit www.te.com

## EMC Performance (Continued)

### Typical HexaShield Applications

| |
|---|
| Civilian and military aircraft |
| Avionics |
| Fighter aircraft |
| Missiles and launch support systems |
| Armored and military support vehicles |
| Navy ships (total shipboard hardening) |
| Military communications |
| Engines (FADEC harness hardening) |

### HexaShield Product Range

| Accommodates the following connector types*: |
|---|
| MIL-C-26482 Series 1 |
| MIL-DTL-38999 Series 1, 2, 3, and 4 |
| MIL-C-26482 Series 2 |
| MIL-DTL-83723 Series 1 and 3 |
| DBAD |
| ARINC 600 |
| ARINC 404 |

*Please contact TE for other connector types and special requests.

## HexaShield F

### Flexible EMI Termination System

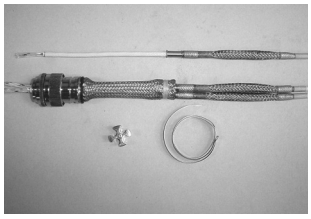

Individual cable braid terminations offering multiple connector pin repairs with zero pig-tail length for superior EMC performance, without the need for gross over-braid.

HexaShield F provides the following advantages:

- Installation ease reduces shield termination labor cost
- Ease of maintenance and repair allows performance of normal connector contact repairs, addition or change of a cable multiple times
- Small size and lightweight
- Sound mechanical performances of termination
- Provides strain relief on individual cables
- Better shielding performance of termination
- Available in various star sizes and platings (TE FLX40 series drawings. Contact TE for detailed information)

### Applications

HexaShield F termination system is especially useful for high-speed quadrax cable (IEEE 1394) applications.

### Product Facts

- **Maintains electrical integrity while connecting controlled electrical cables to mil-spec connectors**
- **Flexible and versatile design fits most mil-spec connectors, shielded signal wires, and ARINC connectors**
- **Zero pigtail length braid termination**
- **Modular cable termination using ferrules, SolderSleeve devices, stars, and braid allows for repeated cable segment repairability**
- **Stars for ferrules with band strap (Tinel-Lock ring can be available) allows for easy re-entry for repair and replacement while providing a secure attachment**
- **Various ferrule count and star positions with optional plugs available to accommodate various cables and plugs**



Catalog 1654025
Revised 3-13

www.te.com

Dimensions are shown for reference purposes only. Specifications subject to change.

Dimensions are in millimeters unless otherwise specified.

USA: +1 800 522 6752
Asia Pacific: +86 0 400 820 6015
UK: +44 800 267 666

For additional support numbers please visit www.te.com

## Raychem Spin Lock Variable Angle Backshell

The Raychem spin lock variable angle backshell enables straight, 45˚ and 90˚ cable terminations with the same part. The connector backshell swivelling body rotates around the axis of the cable bundle and locks in position, minimizing stress on the wire bundle and providing more robust strain relief than other termination systems.

### Product Facts

- **Variable angle backshell enables straight, 45˚ and 90˚ cable terminations with the same part**
- **High performance, low resistance shield termination provided by the proven Tinel-Lock ring system or bandstrap**
- **Sealed termination achieved via a standard heat-shrinkable molded shape and adhesive system**
- **Available in a variety of material and plating options**
- **Saddle clamp strain relief or heat-shrinkable molded shape provides strain relief and sealing**



### Application Tooling

RH-3960-1 TINEL-KIT-120V or AD-5000-TINEL-ASSY (240v)

Torque Wrench

Heat Gun (if using heat-shrinkable molded part version)

### Applications

Military and Commercial Aerospace

Military Ground Systems

Military Marine

Commercial Ships and Off-Shore Marine

### Materials

Aluminum with Electroless Nickel or Cadmium over Electroless Nickel or Zinc Nickel plating

### Standards & Specs

Application Specification:

MIP-103-1 (Installation Procedure, Saddle Clamp Strain Relief)

MIP-103-2 (Installation Procedure, Molded Part Strain Relief)

Product Specification: MPS-103

Additional Documents: SLC40, SLC41, SLC54, SLM40, SLM41, SLM54, CH00-0250-019

### Electrical/Mechanical

| Title | Requirement | Passing Criteria |
|---|---|---|
| Examination of product | MPS-103 3.3.1 | Meet drawing dimension |
| DC Resistance | MPS-103 3.3.2 | DC Resistance < 2.5mΩ |
| Salt Spray | MPS-103 3.3.3 | Exposure of basis metal:<br>Non-critical area <0.1”<br>Critical area <.025” |
| Vibration (Category 3B) | MPS-103 3.3.4 | Must pass visual and DC Resistance criteria |
| Shock (Category 3B) | MPS-103 3.3.5 | Must pass visual and DC Resistance criteria |
| Cable Pullout | MPS-103 3.3.6 | Cable Slippage <0.125” |
| Braid Retention | MPS-103 3.3.7 | DC Resistance < 2.5 mΩ |
| Coupling Thread Strength | MPS-103 3.3.8 | No visible damage to threads, coupling nut or anti-rotational teeth |
| DC Resistance | MPS-103 3.3.2 | DC Resistance < 2.5mΩ |
| External Bending Moment | MPS-103 3.3.9 | No visible damage to adapter body, threads, coupling nut or anti-rotational teeth |
| Post Test Examination | MPS-103 3.3.10 | Meet drawing dimensions |

*MPS-103 Requirements meet or exceed SAE-AMS-85049





Catalog 1654025
Revised 3-13

www.te.com

Dimensions are shown for reference purposes only. Specifications subject to change.

Dimensions are in millimeters unless otherwise specified.

USA: +1 800 522 6752
Asia Pacific: +86 0 400 820 6015
UK: +44 800 267 666

For additional support numbers please visit www.te.com

## Raychem Spin Lock Variable Angle Backshell (Continued)



Straight



90°



45°

### Clamp Only

SLC AB – 16

- 16 — Order Number (See customer drawing)
- AB — Plating (See table below)
- SLC — Material (See table below)

### Saddle Clamp Version

SLC 40 AB – 1610 A

- A — Ring Designator (See table below)
- 1610 — Entry Size (See table below)
- 1610 — Order Number (See customer drawing)
- AB — Plating (See table below)
- AB — Material (See table below)
- 40 — Connector Code Number (see customer drawing - leave blank for clamp only)
- SLC — Strain Relief Method (See table below)

### Molded Boot Version

SLM 40 AB – 1610 A – 3/42 – O

- O — Color (Black)
- 3/42 — Adhesive (See 245WOXX)
- 3/42 — Molded Part Material (See 245WOXX)
- A — Ring Designator (See table below)
- 1610 — Entry Size (See table below)
- 1610 — Order Number (see customer drawing)
- AB — Plating (See table below)
- AB — Material (See table below)
- 40 — Connector Code Number (See customer drawing - leave blank for clamp only)
- SLM — Strain Relief Method (see table below)

### Body Only

SLX 40 AB – 1610

- 1610 — Entry Size (See table below)
- 1610 — Order Number (see customer drawing)
- AB — Plating (See table below)
- AB — Material (See table below)
- 40 — Connector Code Number (See customer drawing - leave blank for clamp only)
- SLX — Strain Relief Method (see table below)

### Additional Images:







| Notes: | | | |
|---|---|---|---|
| Strain Relief Method: | M | = | Molded Part |
| | C | = | Clamp Strain Relief |
| | X | = | Body Only |
| Material: | A | = | Aluminum Alloy |
| | S | = | Stainless Steel (contact TE) |
| Plating: | B | = | Cadmium olive drab to SAE-AMS-PQ-P-146 |
| | C | = | Electroless Nickle to SAE-AMS-26074 Class 3 or 4, Grade A |
| | Z | = | Zinc Nickel, Black to ASTM BB41 Grade 1, Type D |
| | J | = | Passivated per SAE-AMS-QQ-P-35 or MIL-S-5002 (contact TE) |
| Ring Designator: | A | = | AI |
| | B | = | BI |
| | C | = | C1 |
| | D | = | Band Strap (contact TE) |
| | Leave Blank for no band or Tinel-Lock Ring | | |



Catalog 1654025
Revised 3-13

www.te.com

Dimensions are shown for reference purposes only. Specifications subject to change.

Dimensions are in millimeters unless otherwise specified.

USA: +1 800 522 6752
Asia Pacific: +86 0 400 820 6015
UK: +44 800 267 666

For additional support numbers please visit www.te.com

# Unikeyic Electronics

Global Electronic Components Distributor

Click to view pricing, inventory, delivery, and lifecycle information:

## TE Connectivity:

3631B101LL 1743455-2 CRGCQ2010J3K3 SBCHE64R7K U5254-000005-030PA 1393431-1 141991-2 1969656-1 TE50BR39J 1-794222-0 2310537-1 917696-1 936348-1 SMW73R0JT ROX05SJ18R SBCHE154R7K 2005330-1 2377783-2 2380312-2 CPF0402B37K4E1 2834055-1 3430B2F51RTDF 650075-000 1-962915-1 1903112-2 MPT100C18RF RH73H2A40MKTN 175977-2 2-292161-3 3-1393225-0