SN74LVCHR16245A 16-Bit Bus Transceiver With 3-State Outputs

1 Features

- Member of the Texas Instruments Widebus™ Family
- Operates From 1.65 V to 3.6 V
- Inputs Accept Voltages to 5.5 V
- Max t_{pd} of 4.8 ns at 3.3 V
- Typical V_{OLP} (Output Ground Bounce) < 0.8 V at V_{CC} = 3.3 V, T_A = 25°C
- Typical V_{OHV} (Output V_{OH} Undershoot) > 2 V at V_{CC} = 3.3 V, T_A = 25°C
- Supports Mixed-Mode Signal Operation on All Ports (5-V Input/Output Voltage With 3.3-V V_{CC})
- Bus Hold on Data Inputs Eliminates the Need for External Pullup or Pulldown Resistors
- All Outputs Have Equivalent 26-Ω Series Resistors, So No External Resistors Are Required
- I_{off} Supports Live Insertion, Partial Power-Down Mode, and Back-Drive Protection
- Latch-Up Performance Exceeds 250 mA Per JESD 17
- ESD Protection Exceeds JESD 22
  - 2000-V Human-Body Model
  - 200-V Machine Model

2 Applications

- Telecom Infrastructures
- Industrial Transport
- Wireless Infrastructures
- Servers
- Tests and Measurements

3 Description

This 16-bit (dual-octal) noninverting bus transceiver is designed for 1.65-V to 3.6-V V_{CC} operation.

The SN74LVCHR16245A device is designed for asynchronous communication between data buses. The control-function implementation minimizes external-timing requirements.

Device Information(1)

PART NUMBER	PACKAGE	BODY SIZE (NOM)
SN74LVCHR16245A	TSSOP (48)	12.50 mm × 6.10 mm
	SSOP (48)	15.88 mm × 7.49 mm
	TVSOP (48)	9.70 mm × 4.40 mm

(1) For all available packages, see the orderable addendum at the end of the data sheet.

4 Simplified Schematic

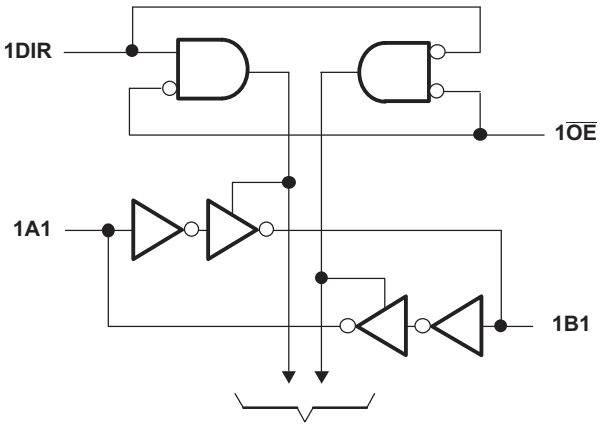

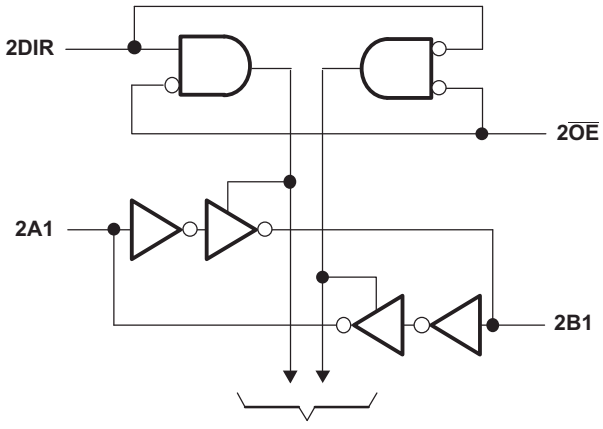

An IMPORTANT NOTICE at the end of this data sheet addresses availability, warranty, changes, use in safety-critical applications, intellectual property matters and other important disclaimers. PRODUCTION DATA.

Table of Contents

1 Features ... 1
2 Applications ... 1
3 Description ... 1
4 Simplified Schematic ... 1
5 Revision History ... 2
6 Pin Configuration and Functions ... 3
7 Specifications ... 6
7.1 Absolute Maximum Ratings ... 6
7.2 Handling Ratings ... 6
7.3 Recommended Operating Conditions ... 7
7.4 Thermal Information ... 7
7.5 Electrical Characteristics ... 8
7.6 Switching Characteristics ... 9
7.7 Operating Characteristics ... 9
7.8 Typical Characteristics ... 9
8 Parameter Measurement Information ... 10
9 Detailed Description ... 11
9.1 Overview ... 11
9.2 Functional Block Diagram ... 11
9.3 Feature Description ... 12
9.4 Device Functional Modes ... 12
10 Application and Implementation ... 13
10.1 Application Information ... 13
10.2 Typical Application ... 13
11 Power Supply Recommendations ... 15
12 Layout ... 15
12.1 Layout Guidelines ... 15
12.2 Layout Example ... 15
13 Device and Documentation Support ... 16
13.1 Trademarks ... 16
13.2 Electrostatic Discharge Caution ... 16
13.3 Glossary ... 16
14 Mechanical, Packaging, and Orderable Information ... 16

5 Revision History

Changes from Revision P (December 2005) to Revision Q **Page**

- Updated document to new TI data sheet format. ... 1
- Removed Ordering Information table. ... 1
- Changed I_{off} bullet in Features. ... 1
- Added Applications. ... 1
- Added Pin Functions table. ... 3
- Added Handling Ratings table. ... 6
- Changed MAX operating temperature to 125°C in Recommended Operating Conditions table. ... 7
- Added Thermal Information table. ... 7
- Added Typical Characteristics. ... 9
- Added Detailed Description section. ... 11
- Added Application and Implementation section. ... 13
- Added Power Supply Recommendations and Layout sections. ... 15

Copyright © 1996–2014, Texas Instruments Incorporated

6 Pin Configuration and Functions

DGG, DGV, OR DL PACKAGE
(TOP VIEW)

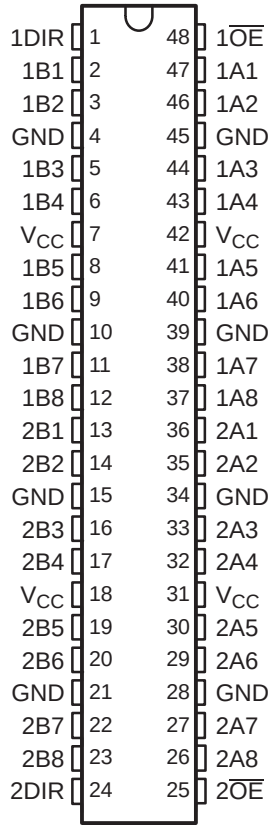

Pin Functions

PIN		I/O	DESCRIPTION
NO.	NAME		
1	1DIR	I	Direction pin 1
2	1B1	I/O	1B1 input or output
3	1B2	I/O	1B2 input or output
4	GND	—	Ground pin
5	1B3	I/O	1B3 input or output
6	1B4	I/O	1B4 input or output
7	V_{CC}	—	Power pin
8	1B5	I/O	1B5 input or output
9	1B6	I/O	1B6 input or output
10	GND	—	Ground pin
11	1B7	I/O	1B7 input or output
12	1B8	I/O	1B8 input or output
13	2B1	I/O	2B1 input or output
14	2B2	I/O	2B2 input or output
15	GND	—	Ground pin
16	2B3	I/O	2B3 input or output
17	2B4	I/O	2B4 input or output
18	V_{CC}	—	Power pin

Copyright © 1996–2014, Texas Instruments Incorporated

Pin Functions (continued)

PIN		I/O	DESCRIPTION
NO.	NAME		
19	2B5	I/O	2B5 input or output
20	2B6	I/O	2B6 input or output
21	GND	—	Ground pin
22	2B7	I/O	2B7 input or output
23	2B8	I/O	2B8 input or output
24	2DIR	I	Direction pin 2
25	$2\overline{OE}$	I	Output Enable 2
26	2A8	I/O	2A8 input or output
27	2A7	I/O	2A7 input or output
28	GND	—	Ground pin
29	2A6	I/O	2A6 input or output
30	2A5	I/O	2A5 input or output
31	V_{CC}	—	Power pin
32	2A4	I/O	2A4 input or output
33	2A3	I/O	2A3 input or output
34	GND	—	Ground pin
35	2A2	I/O	2A2 input or output
36	2A1	I/O	2A1 input or output
37	1A8	I/O	1A8 input or output
38	1A7	I/O	1A7 input or output
39	GND	—	Ground pin
40	1A6	I/O	1A6 input or output
41	1A5	I/O	1A5 input or output
42	V_{CC}	—	Power pin
43	1A4	I/O	1A4 input or output
44	1A3	I/O	1A3 input or output
45	GND	—	Ground pin
46	1A2	I/O	1A2 input or output
47	1A1	I/O	1A1 input or output
48	$1\overline{OE}$	I	Output Enable 1

Copyright © 1996–2014, Texas Instruments Incorporated

GQL OR ZQL PACKAGE
(TOP VIEW)

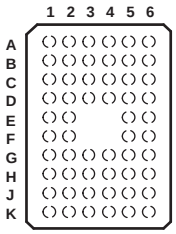

Table 1. Pin Assignments(1)
(56-Ball GQL or ZQL Package)

	1	2	3	4	5	6
A	1DIR	NC	NC	NC	NC	$1\overline{OE}$
B	1B2	1B1	GND	GND	1A1	1A2
C	1B4	1B3	V_{CC}	V_{CC}	1A3	1A4
D	1B6	1B5	GND	GND	1A5	1A6
E	1B8	1B7			1A7	1A8
F	2B1	2B2			2A2	2A1
G	2B3	2B4	GND	GND	2A4	2A3
H	2B5	2B6	V_{CC}	V_{CC}	2A6	2A5
J	2B7	2B8	GND	GND	2A8	2A7
K	2DIR	NC	NC	NC	NC	$2\overline{OE}$

(1) NC – No internal connection

GRD OR ZRD PACKAGE
(TOP VIEW)

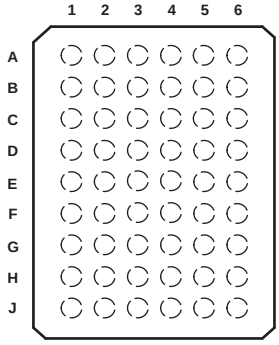

Table 2. Pin Assignments(1)
(54-Ball GRD or ZRD Package)

	1	2	3	4	5	6
A	1B1	NC	1DIR	$1\overline{OE}$	NC	1A1
B	1B3	1B2	NC	NC	1A2	1A3
C	1B5	1B4	V_{CC}	V_{CC}	1A4	1A5
D	1B7	1B6	GND	GND	1A6	1A7
E	2B1	1B8	GND	GND	1A8	2A1
F	2B3	2B2	GND	GND	2A2	2A3
G	2B5	2B4	V_{CC}	V_{CC}	2A4	2A5
H	2B7	2B6	NC	NC	2A6	2A7
J	2B8	NC	2DIR	$2\overline{OE}$	NC	2A8

(1) NC – No internal connection

Copyright © 1996–2014, Texas Instruments Incorporated

7 Specifications

7.1 Absolute Maximum Ratings(1)

over operating free-air temperature range (unless otherwise noted)

			MIN	MAX	UNIT
V_{CC}	Supply voltage range		–0.5	6.5	V
V_I	Input voltage range(2)		–0.5	6.5	V
V_O	Voltage range applied to any output in the high-impedance or power-off state(2)		–0.5	6.5	V
V_O	Voltage range applied to any output in the high or low state(2)(3)		–0.5	V_{CC} + 0.5	V
I_{IK}	Input clamp current	V_I < 0		–50	mA
I_{OK}	Output clamp current	V_O < 0		–50	mA
I_O	Continuous output current			±50	mA
	Continuous current through each V_{CC} or GND			±100	mA

(1) Stresses beyond those listed under *Absolute Maximum Ratings* may cause permanent damage to the device. These are stress ratings only, and functional operation of the device at these or any other conditions beyond those indicated under *Recommended Operating Conditions* is not implied. Exposure to absolute-maximum-rated conditions for extended periods may affect device reliability.
(2) The input negative-voltage and output voltage ratings may be exceeded if the input and output current ratings are observed.
(3) The value of V_{CC} is provided in the *Recommended Operating Conditions* table.

7.2 Handling Ratings

			MIN	MAX	UNIT
T_{stg}	Storage temperature range		–65	150	°C
$V_{(ESD)}$	Electrostatic discharge	Human body model (HBM), per ANSI/ESDA/JEDEC JS-001, all pins(1)	0	2000	V
		Charged device model (CDM), per JEDEC specification JESD22-C101, all pins(2)	0	2000	

(1) JEDEC document JEP155 states that 500-V HBM allows safe manufacturing with a standard ESD control process.
(2) JEDEC document JEP157 states that 250-V CDM allows safe manufacturing with a standard ESD control process.

Copyright © 1996–2014, Texas Instruments Incorporated

7.3 Recommended Operating Conditions

over operating free-air temperature range (unless otherwise noted)(1)

			MIN	MAX	UNIT
V_{CC}	Supply voltage	Operating	1.65	3.6	V
		Data retention only	1.5		
V_{IH}	High-level input voltage	V_{CC} = 1.65 V to 1.95 V	0.65 × V_{CC}		V
		V_{CC} = 2.3 V to 2.7 V	1.7		
		V_{CC} = 2.7 V to 3.6 V	2		
V_{IL}	Low-level input voltage	V_{CC} = 1.65 V to 1.95 V		0.35 × V_{CC}	V
		V_{CC} = 2.3 V to 2.7 V		0.7	
		V_{CC} = 2.7 V to 3.6 V		0.8	
V_I	Input voltage		0	5.5	V
V_O	Output voltage	High or low state	0	V_{CC}	V
		3-state	0	5.5	
I_{OH}	High-level output current	V_{CC} = 1.65 V		–2	mA
		V_{CC} = 2.3 V		–4	
		V_{CC} = 2.7 V		–8	
		V_{CC} = 3 V		–12	
I_{OL}	Low-level output current	V_{CC} = 1.65 V		2	mA
		V_{CC} = 2.3 V		4	
		V_{CC} = 2.7 V		8	
		V_{CC} = 3 V		12	
Δt/Δv	Input transition rise or fall rate			10	ns/V
T_A	Operating free-air temperature		–40	125	°C

(1) All unused control inputs of the device must be held at V_{CC} or GND to ensure proper device operation. Refer to the TI application report, *Implications of Slow or Floating CMOS Inputs* (SCBA004).

7.4 Thermal Information

THERMAL METRIC(1)		SN74LVCHR16245A			UNIT
		DGG	DGV	DL	
		48 PINS			
$R_{\theta JA}$	Junction-to-ambient thermal resistance	64.3	78.4	68.4	°C/W
$R_{\theta JC(top)}$	Junction-to-case (top) thermal resistance	17.6	30.7	34.7	
$R_{\theta JB}$	Junction-to-board thermal resistance	31.5	41.8	41.0	
ψ_{JT}	Junction-to-top characterization parameter	1.1	3.8	12.3	
ψ_{JB}	Junction-to-board characterization parameter	31.2	41.3	40.4	

(1) For more information about traditional and new thermal metrics, see the *IC Package Thermal Metrics* application report (SPRA953).

Copyright © 1996–2014, Texas Instruments Incorporated

7.5 Electrical Characteristics

over recommended operating free-air temperature range (unless otherwise noted)

PARAMETER		TEST CONDITIONS		V_{CC}	MIN	TYP(1)	MAX	UNIT
V_{OH}		I_{OH} = –100 µA		1.65 V to 3.6 V	V_{CC} – 0.2			V
		I_{OH} = –2 mA		1.65 V	1.2			
		I_{OH} = –4 mA		2.3 V	1.7			
				2.7 V	2.2			
		I_{OH} = –6 mA		3 V	2.4			
		I_{OH} = –8 mA		2.7 V	2			
		I_{OH} = –12 mA		3 V	2			
V_{OL}		I_{OL} = 100 µA		1.65 V to 3.6 V			0.2	V
		I_{OL} = 2 mA		1.65 V			0.45	
		I_{OL} = 4 mA		2.3 V			0.7	
				2.7 V			0.4	
		I_{OL} = 6 mA		3 V			0.55	
		I_{OL} = 8 mA		2.7 V			0.6	
		I_{OL} = 12 mA		3 V			0.8	
I_I	Control inputs	V_I = 0 to 5.5 V		3.6 V			±5	µA
$I_{I(hold)}$	A or B port	V_I = 0.58 V		1.65 V	15			µA
		V_I = 1.07 V			–15			
		V_I = 0.7 V		2.3 V	45			
		V_I = 1.7 V			–45			
		V_I = 0.8 V		3 V	75			
		V_I = 2 V			–75			
		V_I = 0 to 3.6 V(2)		3.6 V			±500	
I_{off}		V_I or V_O = 5.5 V		0			±10	µA
I_{OZ}(3)		V_O = 0 V or (V_{CC} to 5.5 V)		2.3 V to 3.6 V			±5	µA
I_{CC}		V_I = V_{CC} or GND	I_O = 0	3.6 V			20	µA
		3.6 V ≤ V_I ≤ 5.5 V(4)					20	
ΔI_{CC}		One input at V_{CC} – 0.6 V, Other inputs at V_{CC} or GND		2.7 V to 3.6 V			500	µA
C_i	Control inputs	V_I = V_{CC} or GND		3.3 V		3		pF
C_{io}	A or B port	V_O = V_{CC} or GND		3.3 V		12		pF

(1) All typical values are at V_{CC} = 3.3 V, T_A = 25°C.
(2) This is the bus-hold maximum dynamic current. It is the minimum overdrive current required to switch the input from one state to another.
(3) For the total leakage current in an I/O port, please consult the $I_{I(hold)}$ specification for the input voltage condition 0 V < V_I < V_{CC}, and the I_{OZ} specification for the input voltage conditions V_I = 0 V or V_I = V_{CC} to 5.5 V. The bus-hold current, at input voltages greater than V_{CC}, is negligible.
(4) This applies in the disabled state only.

Copyright © 1996–2014, Texas Instruments Incorporated

7.6 Switching Characteristics

over recommended operating free-air temperature range (unless otherwise noted) (see Figure 3)

PARAMETER	FROM (INPUT)	TO (OUTPUT)	V_{CC} = 1.8 V ± 0.15 V		V_{CC} = 2.5 V ± 0.2 V		V_{CC} = 2.7 V		V_{CC} = 3.3 V ± 0.3 V		UNIT
			MIN	MAX	MIN	MAX	MIN	MAX	MIN	MAX	
t_{pd}	A or B	B or A	1	12.5	1	9.5	1	5.7	1.5	4.8	ns
t_{en}	$\overline{OE}$	A or B	1	15.8	1	12.2	1	7.9	1.5	6.3	ns
t_{dis}	$\overline{OE}$	A or B	1	19.2	1	11.9	1	8.3	2.2	7.4	ns

7.7 Operating Characteristics

T_A = 25°C

PARAMETER			TEST CONDITIONS	V_{CC} = 1.8 V	V_{CC} = 2.5 V	V_{CC} = 3.3 V	UNIT
				TYP	TYP	TYP	
C_{pd}	Power dissipation capacitance per transceiver	Outputs enabled	f = 10 MHz	36	36	39	pF
		Outputs disabled		3	3	4	

7.8 Typical Characteristics

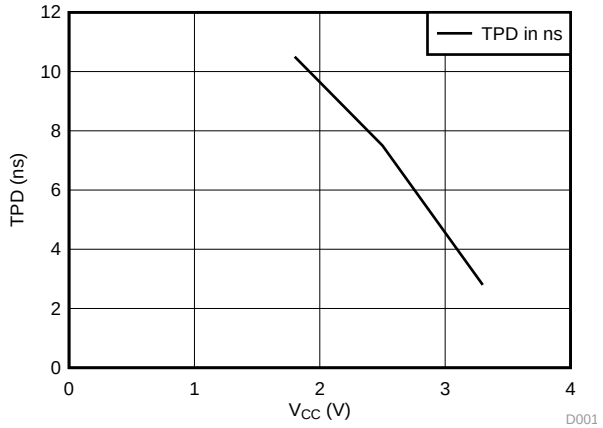

Figure 1. TPD vs V_{CC}

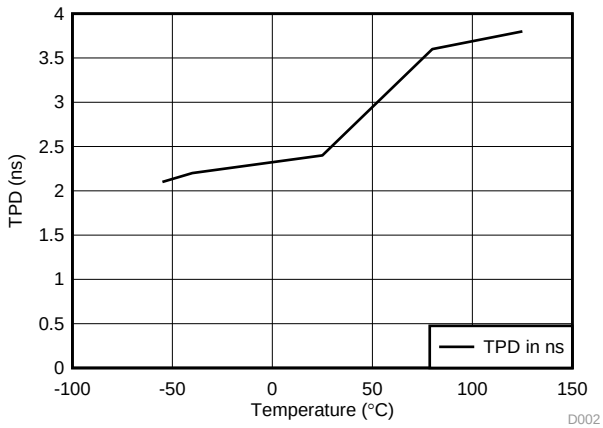

Figure 2. TPD vs Temperature

8 Parameter Measurement Information

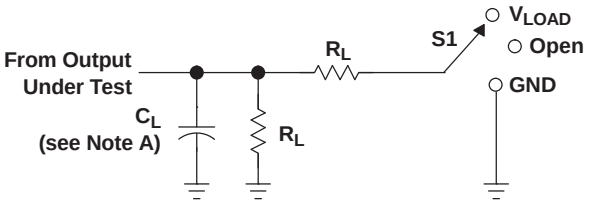

LOAD CIRCUIT

TEST	S1
t_{PLH}/t_{PHL}	Open
t_{PLZ}/t_{PZL}	V_{LOAD}
t_{PHZ}/t_{PZH}	GND

V_{CC}	INPUT		V_M	V_{LOAD}	C_L	R_L	V_Δ
	V_I	t_r/t_f					
1.8 V ± 0.15 V	V_{CC}	≤2 ns	$V_{CC}/2$	V_{CC}	30 pF	1 kΩ	0.15 V
2.5 V ± 0.2 V	V_{CC}	≤2 ns	$V_{CC}/2$	V_{CC}	30 pF	500 Ω	0.15 V
2.7 V	2.7 V	≤2.5 ns	1.5 V	6 V	50 pF	500 Ω	0.3 V
3.3 V ± 0.3 V	2.7 V	≤2.5 ns	1.5 V	6 V	50 pF	500 Ω	0.3 V

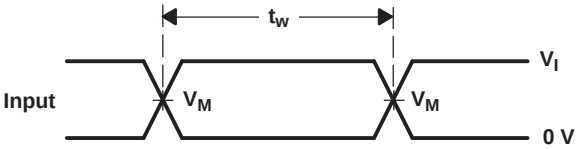

VOLTAGE WAVEFORMS
PULSE DURATION

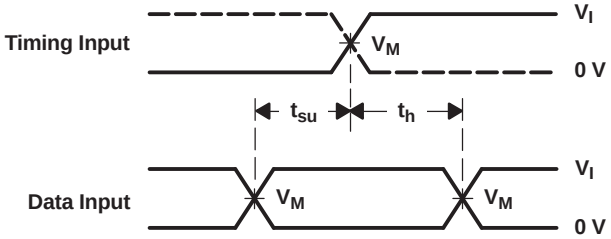

VOLTAGE WAVEFORMS
SETUP AND HOLD TIMES

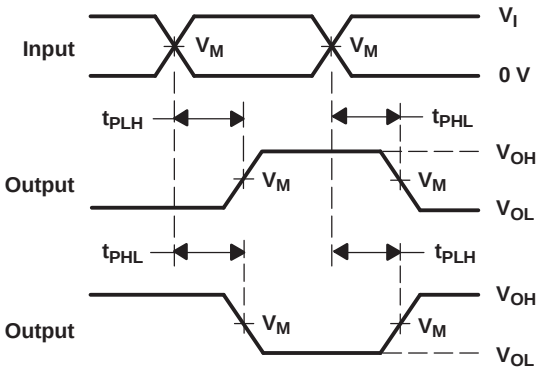

VOLTAGE WAVEFORMS
PROPAGATION DELAY TIMES
INVERTING AND NONINVERTING OUTPUTS

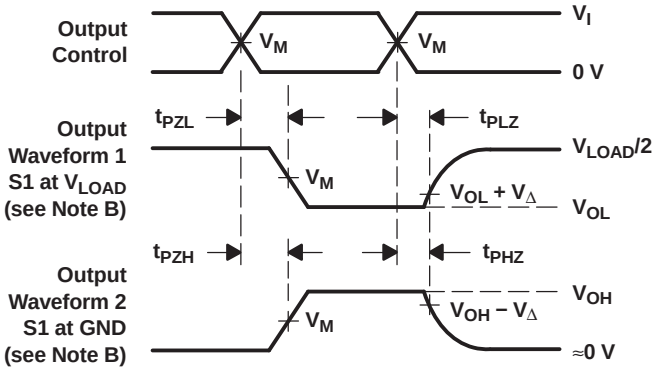

VOLTAGE WAVEFORMS
ENABLE AND DISABLE TIMES
LOW- AND HIGH-LEVEL ENABLING

NOTES: A. C_L includes probe and jig capacitance.
B. Waveform 1 is for an output with internal conditions such that the output is low, except when disabled by the output control. Waveform 2 is for an output with internal conditions such that the output is high, except when disabled by the output control.
C. All input pulses are supplied by generators having the following characteristics: PRR ≤ 10 MHz, Z_O = 50 Ω.
D. The outputs are measured one at a time, with one transition per measurement.
E. t_{PLZ} and t_{PHZ} are the same as t_{dis}.
F. t_{PZL} and t_{PZH} are the same as t_{en}.
G. t_{PLH} and t_{PHL} are the same as t_{pd}.
H. All parameters and waveforms are not applicable to all devices.

Figure 3. Load Circuit and Voltage Waveforms

Copyright © 1996–2014, Texas Instruments Incorporated

9 Detailed Description

9.1 Overview

This 16-bit (dual-octal) noninverting bus transceiver is designed for 1.65-V to 3.6-V V_{CC} operation.

The SN74LVCHR16245A device is designed for asynchronous communication between data buses. The control-function implementation minimizes external-timing requirements.

This device can be used as two 8-bit transceivers or one 16-bit transceiver. It allows data transmission from the A bus to the B bus or from the B bus to the A bus, depending on the logic level at the direction-control (DIR) input. The output-enable ($\overline{OE}$) input can disable the device so that the buses are effectively isolated.

All outputs, which are designed to sink up to 12 mA, include equivalent 26-Ω series resistors to reduce overshoot and undershoot.

Inputs can be driven from either 3.3-V or 5-V devices. This feature allows the use of this device as a translator in a mixed 3.3-V/5-V system environment.

To ensure the high-impedance state during power up or power down, $\overline{OE}$ should be tied to V_{CC} through a pullup resistor; the minimum value of the resistor is determined by the current-sinking capability of the driver.

This device is fully specified for partial-power-down applications using I_{off}. The I_{off} circuitry disables the outputs, preventing damaging current backflow through the device when it is powered down.

Active bus-hold circuitry is provided to hold unused or floating data inputs at a valid logic level. Use of pullup or pulldown resistors with the bus-hold circuitry is not recommended. The bus-hold circuitry is part of the input circuit and is not disabled by $\overline{OE}$ or DIR.

9.2 Functional Block Diagram

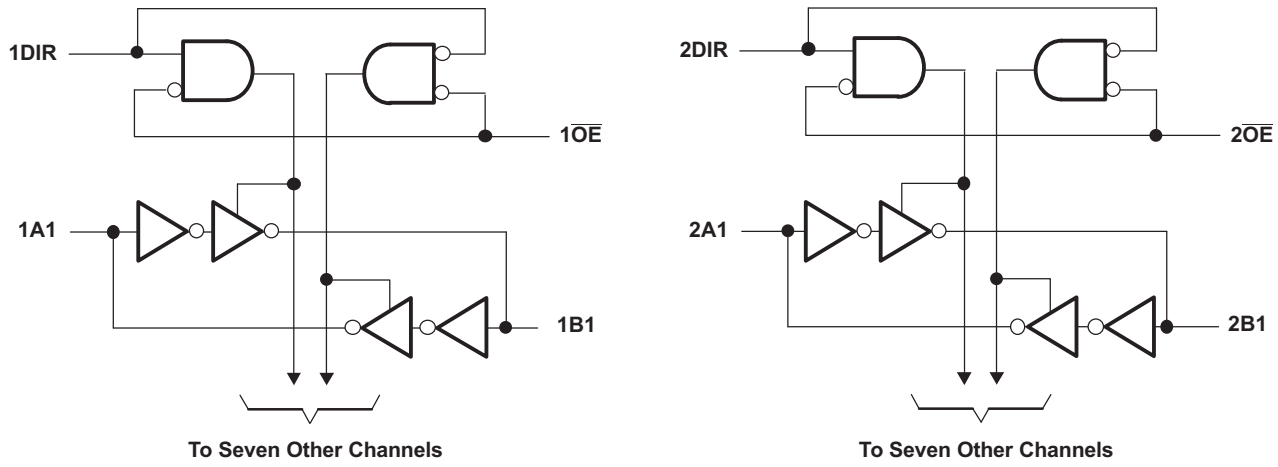

Figure 4. Logic Diagram (Positive Logic)

Copyright © 1996–2014, Texas Instruments Incorporated

9.3 Feature Description

- Wide operating voltage range
  - Operates from 1.65 V to 3.6 V
- Allows down voltage translation
  - Inputs accept voltages to 5.5 V
- I_{off} feature
  - Allows voltages on the inputs and outputs when V_{CC} is 0 V
- All outputs have equivalent 26-Ω series resistors, so no external resistors are required
- Bus hold on data inputs eliminates the need for external pullup or pulldown resistors

9.4 Device Functional Modes

Table 3. Function Table(1)
(Each 8-bit Section)

CONTROL INPUTS		OUTPUT CIRCUITS		OPERATION
$\overline{OE}$	DIR	A PORT	B PORT	
L	L	Enabled	Hi-Z	B data to A bus
L	H	Hi-Z	Enabled	A data to B bus
H	X	Hi-Z	Hi-Z	Isolation

(1) Input circuits of the data I/Os always are active.

Copyright © 1996–2014, Texas Instruments Incorporated

10 Application and Implementation

NOTE

Information in the following applications sections is not part of the TI component specification, and TI does not warrant its accuracy or completeness. TI's customers are responsible for determining suitability of components for their purposes. Customers should validate and test their design implementation to confirm system functionality.

10.1 Application Information

The SN74LVCHR16245A device is a 16-bit bidirectional transceiver. This device can be used as two 8-bit transceivers or one 16-bit transceiver. It allows data transmission from the A bus to the B bus or from the B bus to the A bus, depending on the logic level at the direction-control (DIR) input. The output-enable ($\overline{OE}$) input can be used to disable the device so that the buses are effectively isolated. The device has 5.5-V tolerant inputs at any valid V_{CC} which allows the device to be used in multi-power systems and used for down translation. All outputs have equivalent 26-Ω series resistors, so no external resistors are required. The Bus Hold feature eliminates the need for external pullup or pulldown resistors on unused or floating inputs.

10.2 Typical Application

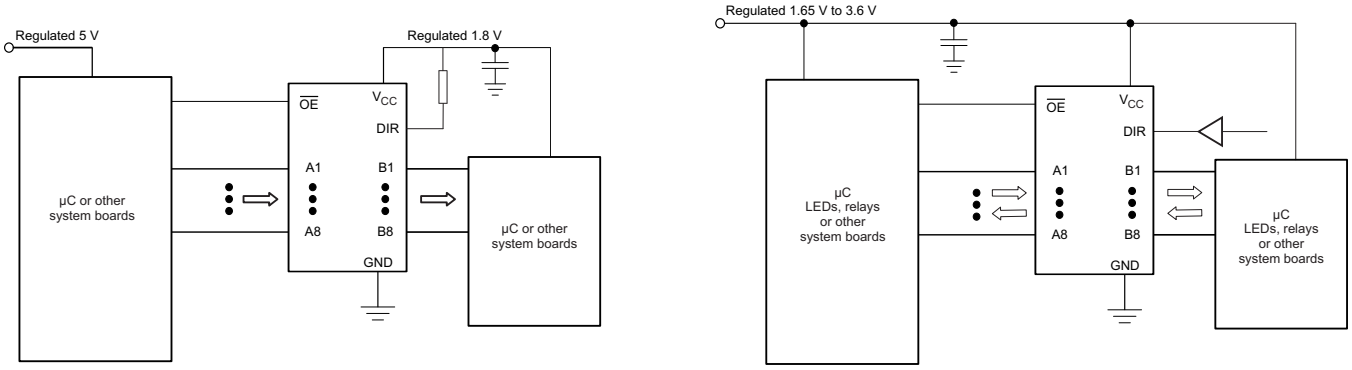

Figure 5. Typical Application Schematic

10.2.1 Design Requirements

This device uses CMOS technology and has balanced output drive. Care should be taken to avoid bus contention because it can drive currents that would exceed maximum limits. The high drive will also create fast edges into light loads, so routing and load conditions should be considered to prevent ringing.

Copyright © 1996–2014, Texas Instruments Incorporated

Typical Application (continued)

10.2.2 Detailed Design Procedure

1. Recommended Input Conditions:
   - Rise time and fall time specifications, see Δt/ΔV in the *Recommended Operating Conditions* table.
   - Specified high and low levels, see V_{IH} and V_{IL} in the *Recommended Operating Conditions* table.
   - Inputs are overvoltage tolerant allowing them to go as high as 5.5 V at any valid V_{CC}.
2. Recommend Output Conditions:
   - Load currents should not exceed 50 mA per output and 100 mA total for the part.
   - Outputs should not be pulled above V_{CC}.

10.2.3 Application Curves

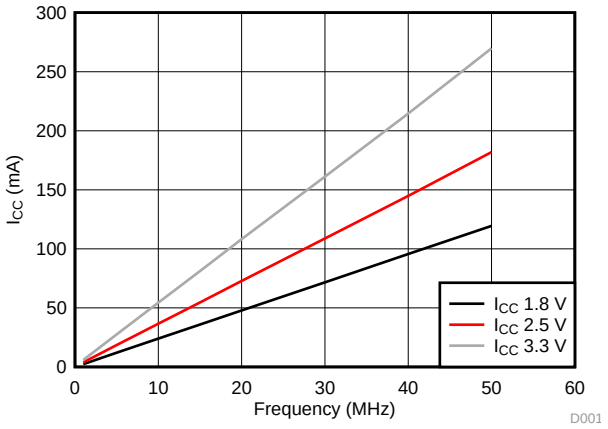

Figure 6. I_{CC} vs Frequency

Copyright © 1996–2014, Texas Instruments Incorporated

11 Power Supply Recommendations

The power supply can be any voltage between the MIN and MAX supply voltage rating located in the *Recommended Operating Conditions* table.

Each V_{CC} pin should have a good bypass capacitor to prevent power disturbance. For devices with a single supply, 0.1 µF is recommended. If there are multiple V_{CC} pins, 0.01 µF or 0.022 µF is recommended for each power pin. It is acceptable to parallel multiple bypass caps to reject different frequencies of noise. A 0.1 µF and 1 µF are commonly used in parallel. The bypass capacitor should be installed as close to the power pin as possible for best results.

12 Layout

12.1 Layout Guidelines

When using multiple bit logic devices, inputs should not float. In many cases, functions or parts of functions of digital logic devices are unused. Some examples are when only two inputs of a triple-input AND gate are used, or when only 3 of the 4-buffer gates are used. Such input pins should not be left unconnected because the undefined voltages at the outside connections result in undefined operational states. Specified in Figure 7 are rules that must be observed under all circumstances. All unused inputs of digital logic devices must be connected to a high or low bias to prevent them from floating. The logic level that should be applied to any particular unused input depends on the function of the device. Generally they will be tied to GND or V_{CC}, whichever makes more sense or is more convenient. It is acceptable to float outputs unless the part is a transceiver. If the transceiver has an output enable pin, it will disable the outputs section of the part when asserted. This will not disable the input section of the I/Os so they also cannot float when disabled.

12.2 Layout Example

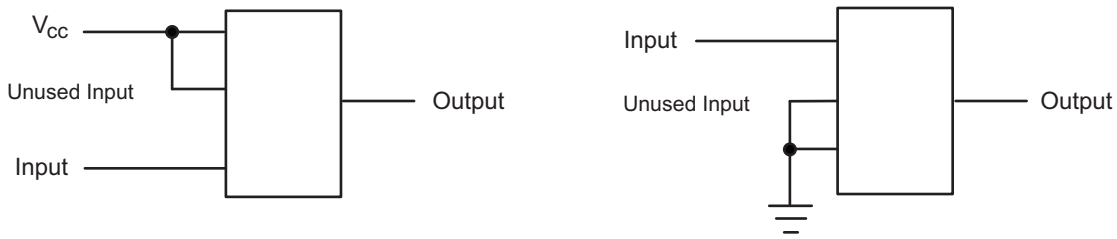

Figure 7. Layout Diagram

13 Device and Documentation Support

13.1 Trademarks

Widebus is a trademark of Texas Instruments.
All other trademarks are the property of their respective owners.

13.2 Electrostatic Discharge Caution



These devices have limited built-in ESD protection. The leads should be shorted together or the device placed in conductive foam during storage or handling to prevent electrostatic damage to the MOS gates.

13.3 Glossary

SLYZ022 — *TI Glossary*.

This glossary lists and explains terms, acronyms, and definitions.

14 Mechanical, Packaging, and Orderable Information

The following pages include mechanical, packaging, and orderable information. This information is the most current data available for the designated devices. This data is subject to change without notice and revision of this document. For browser-based versions of this data sheet, refer to the left-hand navigation.

Copyright © 1996–2014, Texas Instruments Incorporated

PACKAGING INFORMATION

Orderable Device	Status (1)	Package Type	Package Drawing	Pins	Package Qty	Eco Plan (2)	Lead/Ball Finish (6)	MSL Peak Temp (3)	Op Temp (°C)	Device Marking (4/5)	Samples
74LVCHR162245ADLG4	ACTIVE	SSOP	DL	48	1000	Green (RoHS & no Sb/Br)	CU NIPDAU	Level-1-260C-UNLIM	-40 to 85	(LVCHR162245A, LVCHR16245A)	Samples
74LVCHR16245AGRG4	ACTIVE	TSSOP	DGG	48	2000	Green (RoHS & no Sb/Br)	CU NIPDAU	Level-1-260C-UNLIM	-40 to 125	LVCHR16245A	Samples
74LVCHR16245AZQLR	ACTIVE	BGA MICROSTAR JUNIOR	ZQL	56	1000	Green (RoHS & no Sb/Br)	SNAGCU	Level-1-260C-UNLIM	-40 to 125	LR245A	Samples
74LVCHR16245AZRDR	ACTIVE	BGA MICROSTAR JUNIOR	ZRD	54	1000	Green (RoHS & no Sb/Br)	SNAGCU	Level-1-260C-UNLIM	-40 to 125	LR245A	Samples
SN74LVCHR162245ADL	ACTIVE	SSOP	DL	48	1000	Green (RoHS & no Sb/Br)	CU NIPDAU	Level-1-260C-UNLIM	-40 to 85	(LVCHR162245A, LVCHR16245A)	Samples
SN74LVCHR16245AGR	ACTIVE	TSSOP	DGG	48	2000	Green (RoHS & no Sb/Br)	CU NIPDAU	Level-1-260C-UNLIM	-40 to 125	LVCHR16245A	Samples
SN74LVCHR16245ALR	ACTIVE	SSOP	DL	48	1000	Green (RoHS & no Sb/Br)	CU NIPDAU	Level-1-260C-UNLIM	-40 to 85	(LVCHR162245A, LVCHR16245A)	Samples
SN74LVCHR16245AVR	ACTIVE	TVSOP	DGV	48	2000	Green (RoHS & no Sb/Br)	CU NIPDAU	Level-1-260C-UNLIM	-40 to 125	LDR245A	Samples

(1) The marketing status values are defined as follows:
ACTIVE: Product device recommended for new designs.
LIFEBUY: TI has announced that the device will be discontinued, and a lifetime-buy period is in effect.
NRND: Not recommended for new designs. Device is in production to support existing customers, but TI does not recommend using this part in a new design.
PREVIEW: Device has been announced but is not in production. Samples may or may not be available.
OBSOLETE: TI has discontinued the production of the device.

(2) **RoHS:** TI defines "RoHS" to mean semiconductor products that are compliant with the current EU RoHS requirements for all 10 RoHS substances, including the requirement that RoHS substance do not exceed 0.1% by weight in homogeneous materials. Where designed to be soldered at high temperatures, "RoHS" products are suitable for use in specified lead-free processes. TI may reference these types of products as "Pb-Free".
RoHS Exempt: TI defines "RoHS Exempt" to mean products that contain lead but are compliant with EU RoHS pursuant to a specific EU RoHS exemption.
Green: TI defines "Green" to mean the content of Chlorine (Cl) and Bromine (Br) based flame retardants meet JS709B low halogen requirements of <=1000ppm threshold. Antimony trioxide based flame retardants must also meet the <=1000ppm threshold requirement.

(3) MSL, Peak Temp. - The Moisture Sensitivity Level rating according to the JEDEC industry standard classifications, and peak solder temperature.

(4) There may be additional marking, which relates to the logo, the lot trace code information, or the environmental category on the device.

(5) Multiple Device Markings will be inside parentheses. Only one Device Marking contained in parentheses and separated by a "~" will appear on a device. If a line is indented then it is a continuation of the previous line and the two combined represent the entire Device Marking for that device.

(6) Lead/Ball Finish - Orderable Devices may have multiple material finish options. Finish options are separated by a vertical ruled line. Lead/Ball Finish values may wrap to two lines if the finish value exceeds the maximum column width.

Important Information and Disclaimer: The information provided on this page represents TI's knowledge and belief as of the date that it is provided. TI bases its knowledge and belief on information provided by third parties, and makes no representation or warranty as to the accuracy of such information. Efforts are underway to better integrate information from third parties. TI has taken and continues to take reasonable steps to provide representative and accurate information but may not have conducted destructive testing or chemical analysis on incoming materials and chemicals. TI and TI suppliers consider certain information to be proprietary, and thus CAS numbers and other limited information may not be available for release.

In no event shall TI's liability arising out of such information exceed the total purchase price of the TI part(s) at issue in this document sold by TI to Customer on an annual basis.

TAPE AND REEL INFORMATION

REEL DIMENSIONS

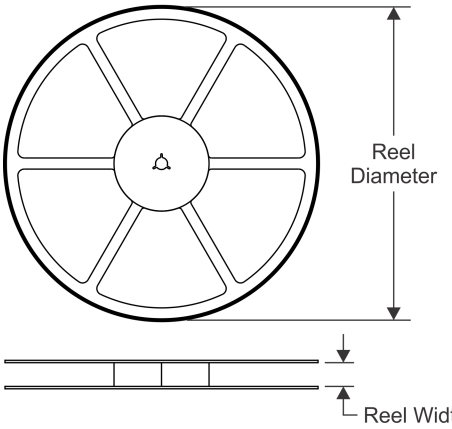

TAPE DIMENSIONS

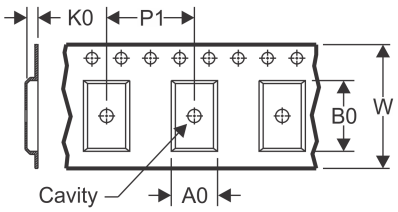

A0	Dimension designed to accommodate the component width
B0	Dimension designed to accommodate the component length
K0	Dimension designed to accommodate the component thickness
W	Overall width of the carrier tape
P1	Pitch between successive cavity centers

QUADRANT ASSIGNMENTS FOR PIN 1 ORIENTATION IN TAPE

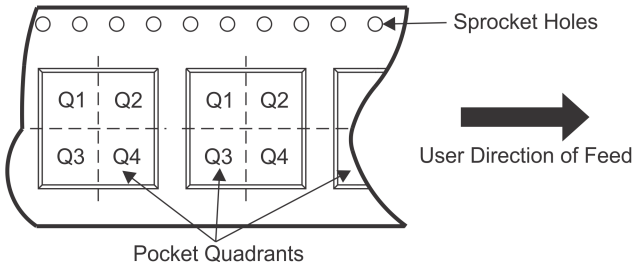

*All dimensions are nominal

Device	Package Type	Package Drawing	Pins	SPQ	Reel Diameter (mm)	Reel Width W1 (mm)	A0 (mm)	B0 (mm)	K0 (mm)	P1 (mm)	W (mm)	Pin1 Quadrant
74LVCHR16245AZQLR	BGA MICROSTAR JUNIOR	ZQL	56	1000	330.0	16.4	4.8	7.3	1.5	8.0	16.0	Q1
74LVCHR16245AZRDR	BGA MICROSTAR JUNIOR	ZRD	54	1000	330.0	16.4	5.8	8.3	1.55	8.0	16.0	Q1
SN74LVCHR16245AGR	TSSOP	DGG	48	2000	330.0	24.4	8.6	13.0	1.8	12.0	24.0	Q1
SN74LVCHR16245ALR	SSOP	DL	48	1000	330.0	32.4	11.35	16.2	3.1	16.0	32.0	Q1
SN74LVCHR16245AVR	TVSOP	DGV	48	2000	330.0	16.4	7.1	10.2	1.6	12.0	16.0	Q1

TAPE AND REEL BOX DIMENSIONS

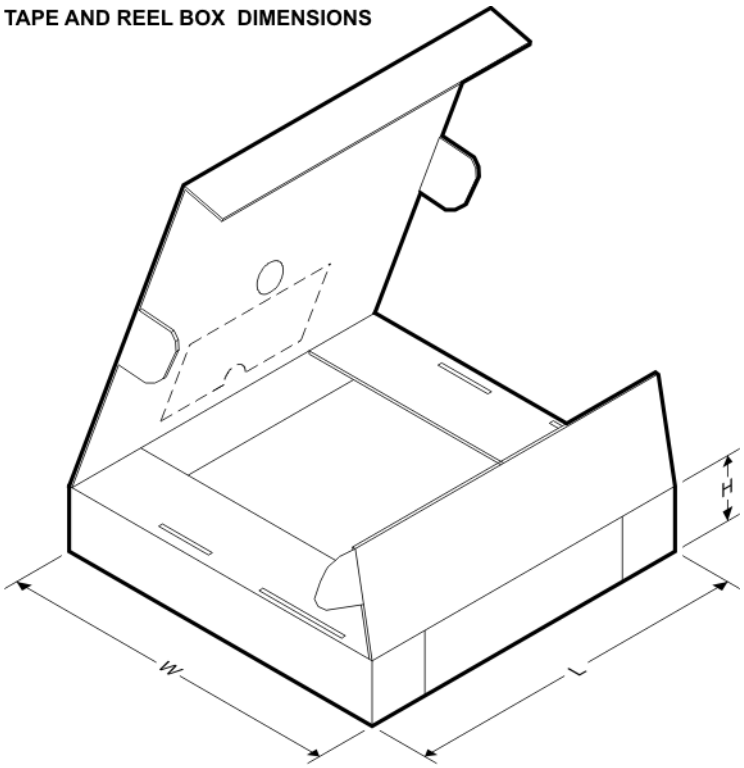

*All dimensions are nominal

Device	Package Type	Package Drawing	Pins	SPQ	Length (mm)	Width (mm)	Height (mm)
74LVCHR16245AZQLR	BGA MICROSTAR JUNIOR	ZQL	56	1000	350.0	350.0	43.0
74LVCHR16245AZRDR	BGA MICROSTAR JUNIOR	ZRD	54	1000	350.0	350.0	43.0
SN74LVCHR16245AGR	TSSOP	DGG	48	2000	367.0	367.0	45.0
SN74LVCHR16245ALR	SSOP	DL	48	1000	367.0	367.0	55.0
SN74LVCHR16245AVR	TVSOP	DGV	48	2000	367.0	367.0	38.0

DGV (R-PDSO-G)** **PLASTIC SMALL-OUTLINE**

24 PINS SHOWN

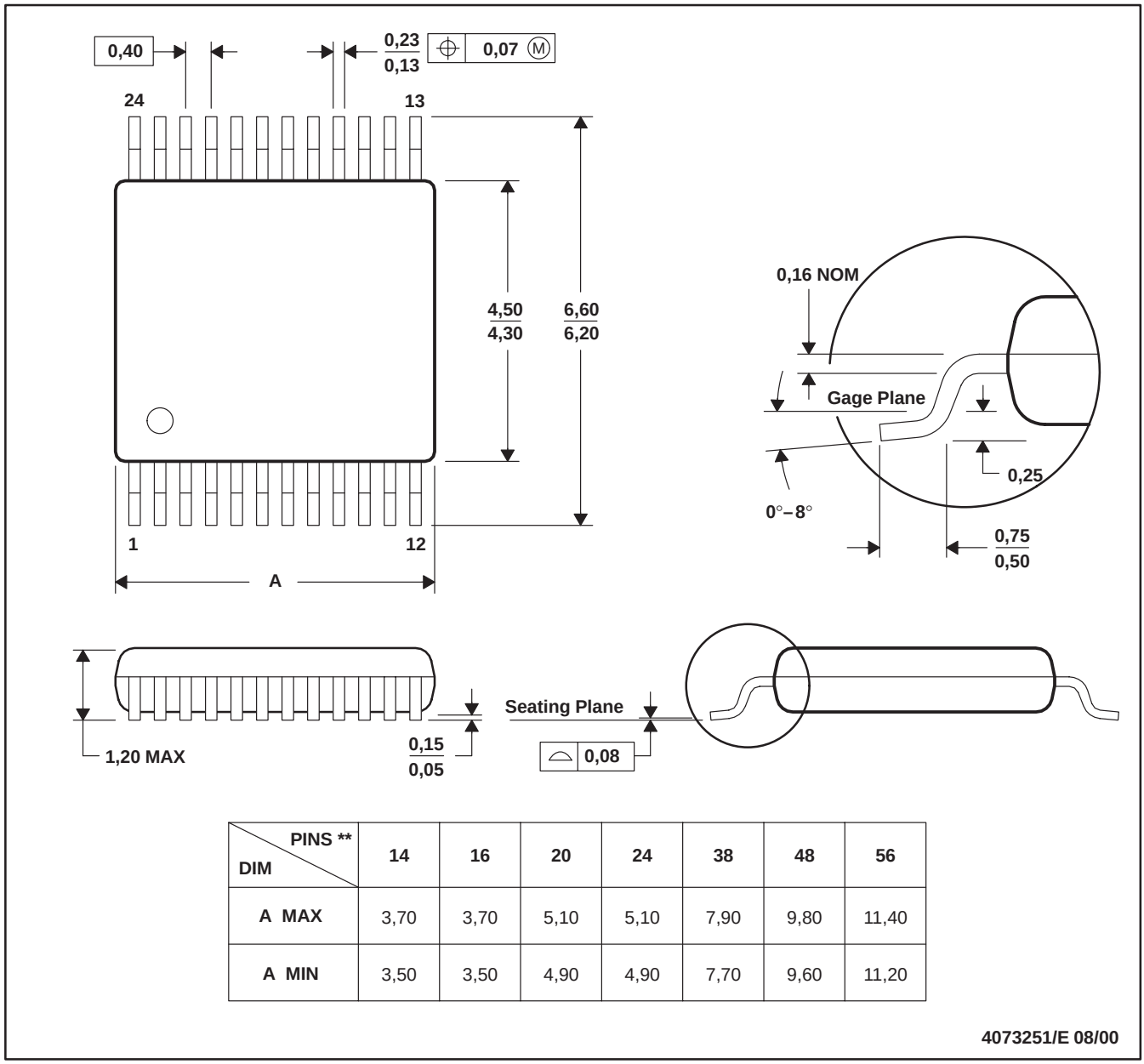

DIM \ PINS **	14	16	20	24	38	48	56
A MAX	3,70	3,70	5,10	5,10	7,90	9,80	11,40
A MIN	3,50	3,50	4,90	4,90	7,70	9,60	11,20

4073251/E 08/00

NOTES: A. All linear dimensions are in millimeters.
B. This drawing is subject to change without notice.
C. Body dimensions do not include mold flash or protrusion, not to exceed 0,15 per side.
D. Falls within JEDEC: 24/48 Pins – MO-153
14/16/20/56 Pins – MO-194

DGG (R-PDSO-G)** **PLASTIC SMALL-OUTLINE PACKAGE**

48 PINS SHOWN

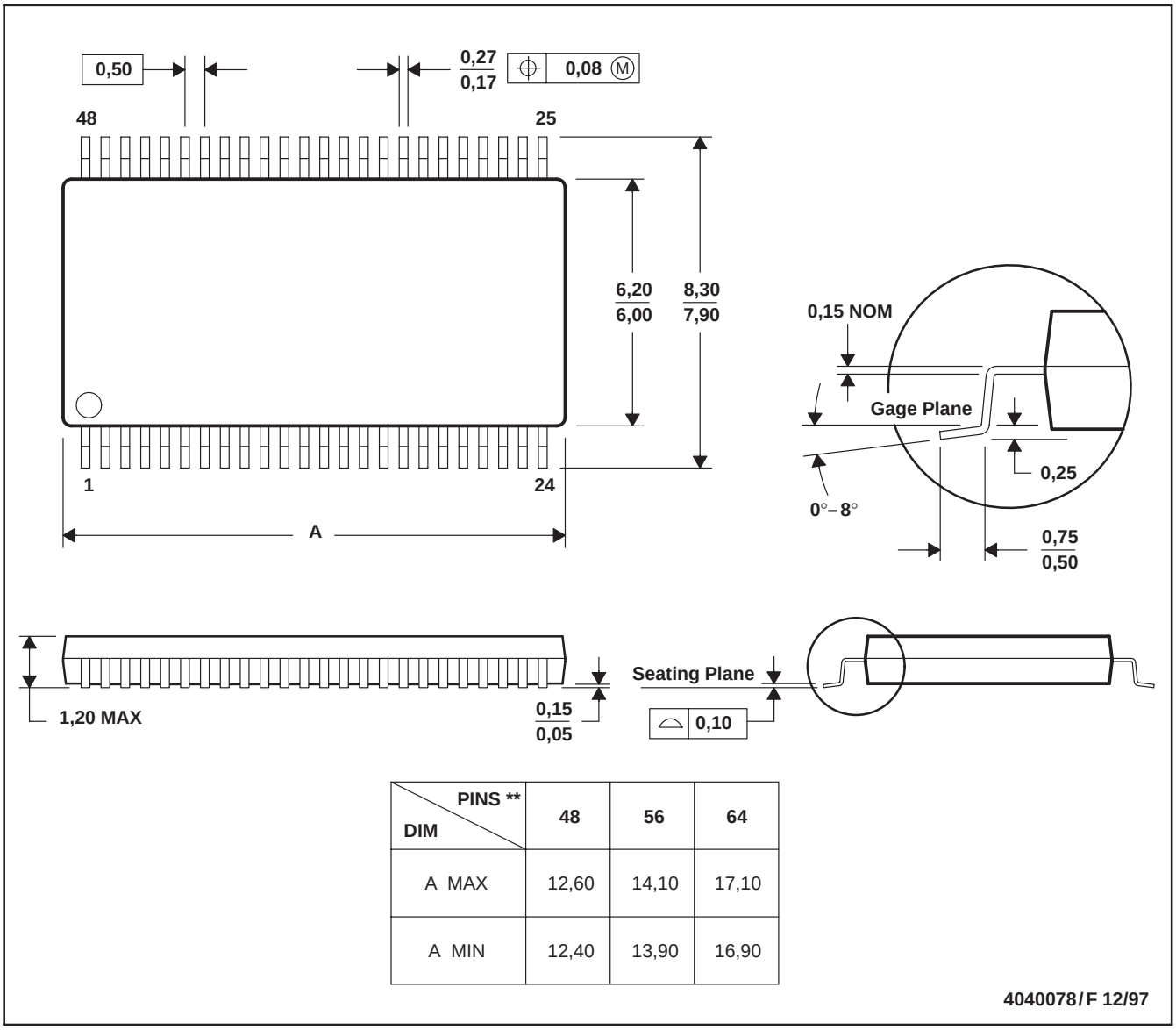

DIM \ PINS **	48	56	64
A MAX	12,60	14,10	17,10
A MIN	12,40	13,90	16,90

NOTES: A. All linear dimensions are in millimeters.
B. This drawing is subject to change without notice.
C. Body dimensions do not include mold protrusion not to exceed 0,15.
D. Falls within JEDEC MO-153

PACKAGE OUTLINE

ZQL0056A

JRBGA - 1 mm max height

PLASTIC BALL GRID ARRAY

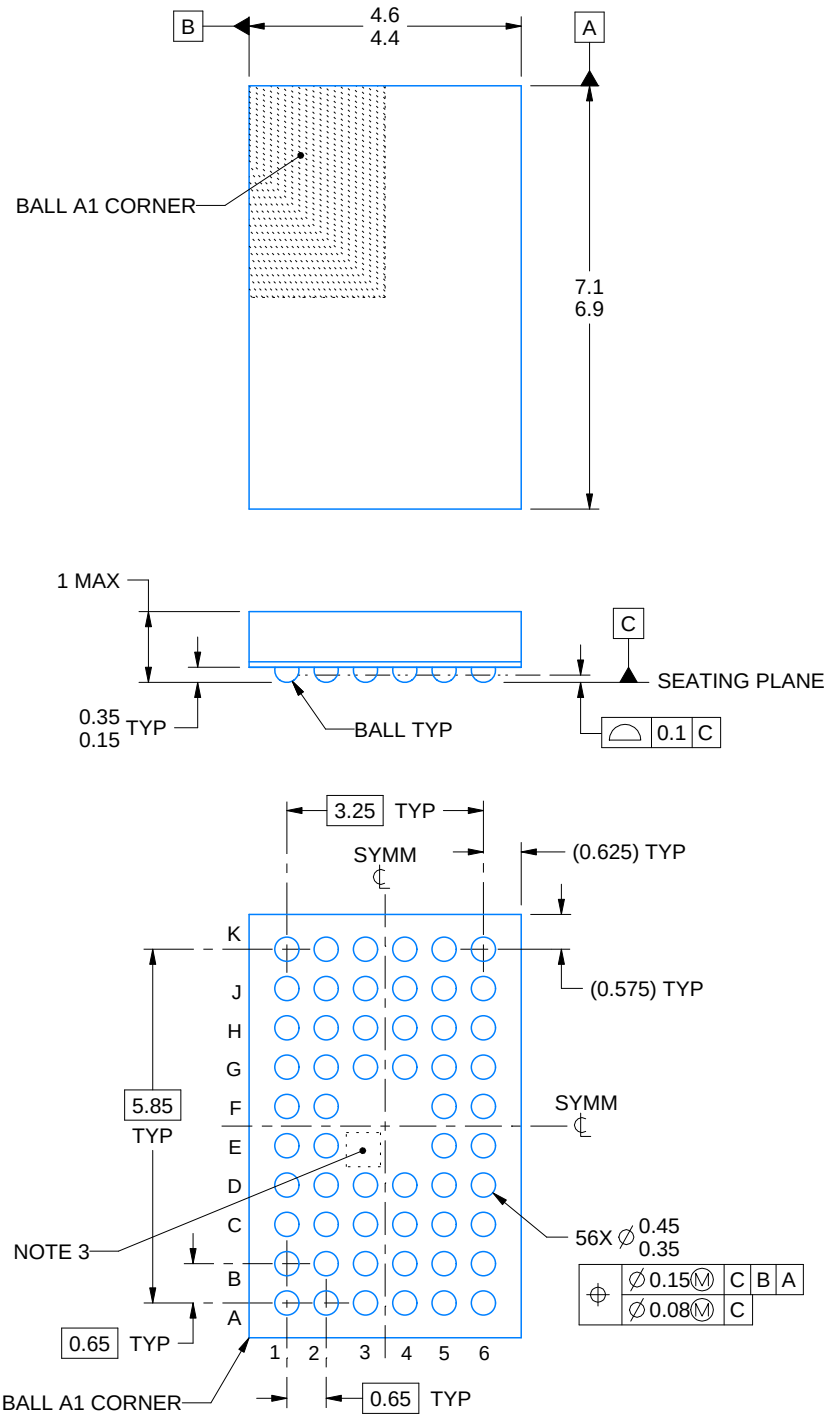

4219711/B 01/2017

NOTES:

1. All linear dimensions are in millimeters. Any dimensions in parenthesis are for reference only. Dimensioning and tolerancing per ASME Y14.5M.
2. This drawing is subject to change without notice.
3. No metal in this area, indicates orientation.

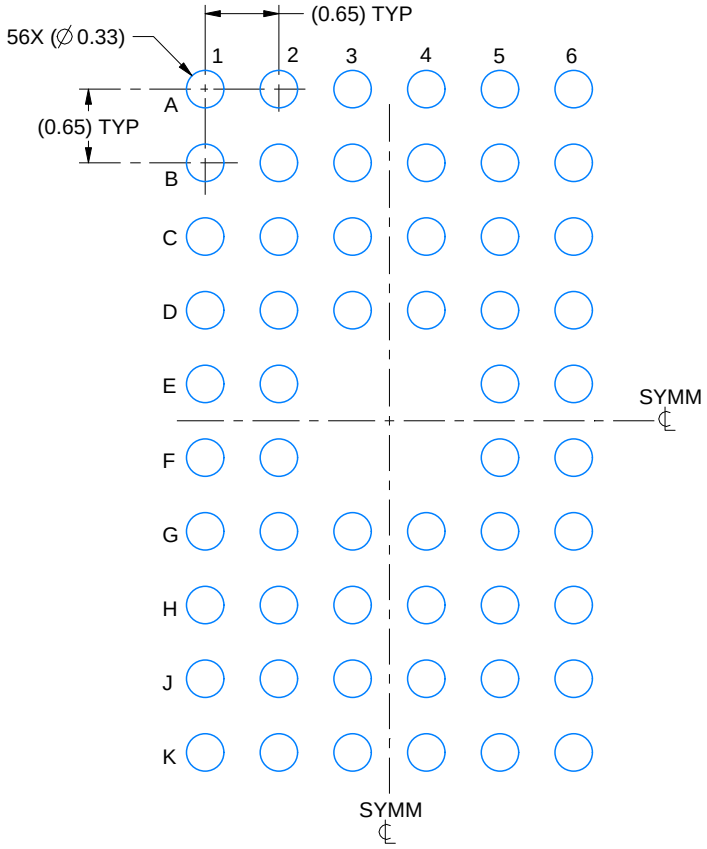

LAND PATTERN EXAMPLE
EXPOSED METAL SHOWN
SCALE:15X

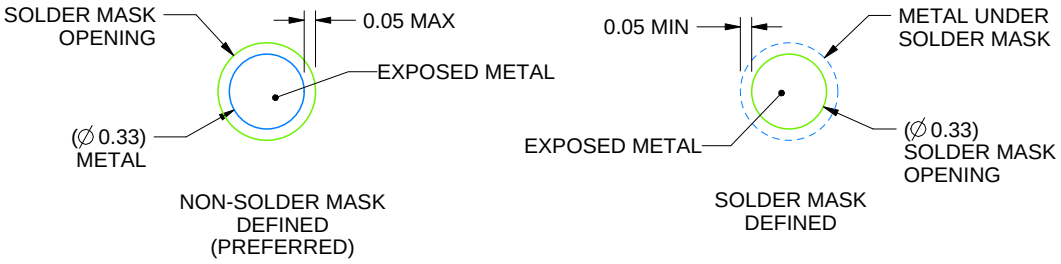

SOLDER MASK DETAILS
NOT TO SCALE

4219711/B 01/2017

NOTES: (continued)

4. Final dimensions may vary due to manufacturing tolerance considerations and also routing constraints. For information, see Texas Instruments literature number SPRAA99 (www.ti.com/lit/spraa99).

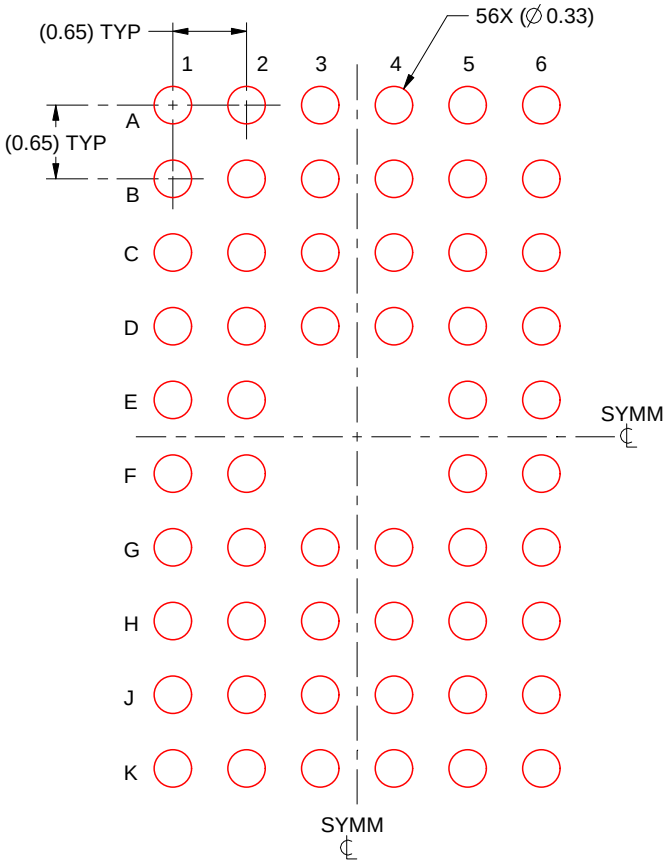

SOLDER PASTE EXAMPLE
BASED ON 0.125 mm THICK STENCIL
SCALE:15X

4219711/B 01/2017

NOTES: (continued)

5. Laser cutting apertures with trapezoidal walls and rounded corners may offer better paste release.

ZRD (R–PBGA–N54) PLASTIC BALL GRID ARRAY

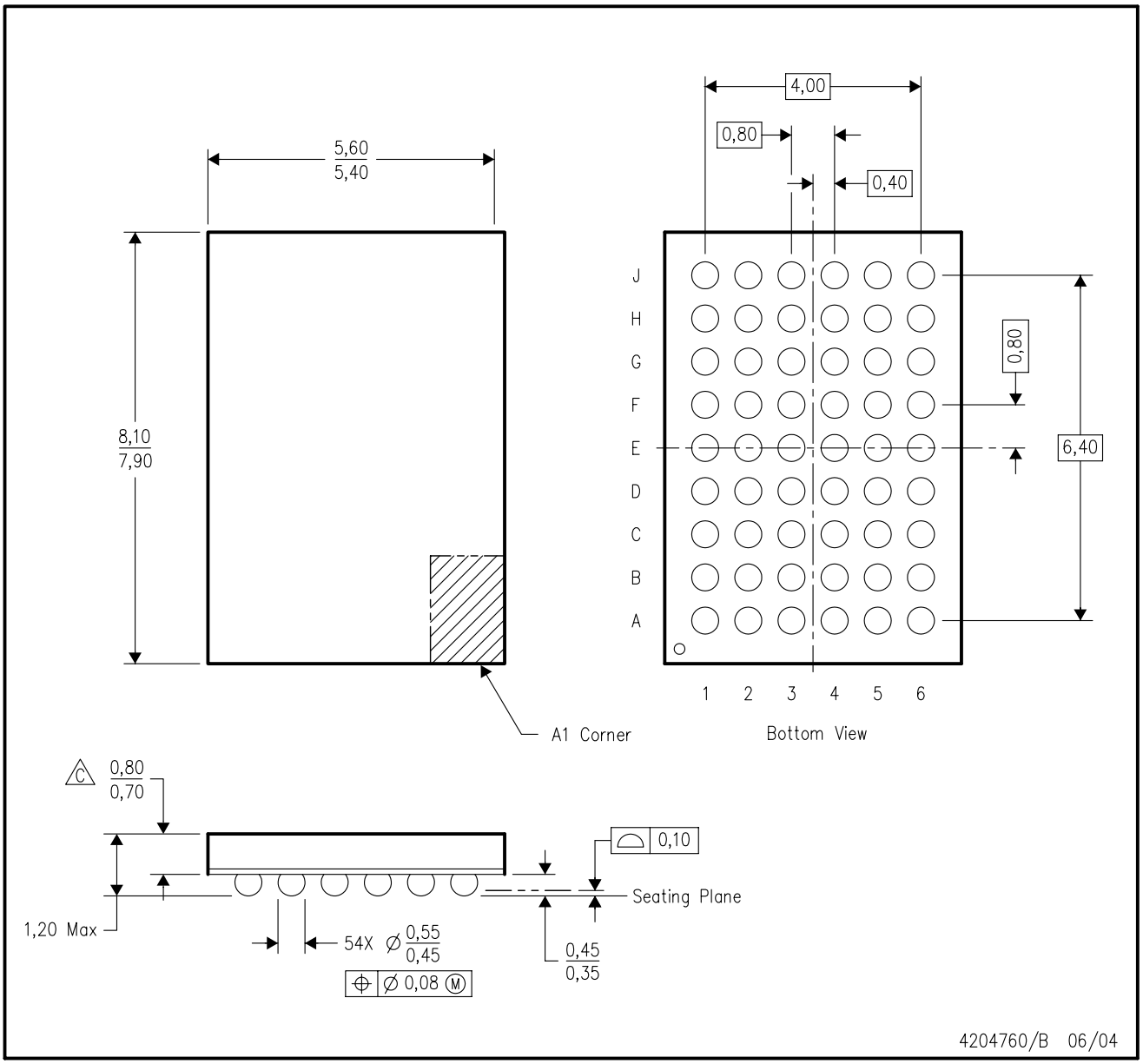

NOTES:
A. All linear dimensions are in millimeters.
B. This drawing is subject to change without notice.
C. Falls within JEDEC MO–205 variation DD.
D. This package is lead–free. Refer to the 54 GRD package (drawing 4204759) for tin–lead (SnPb).

DL (R–PDSO–G48) PLASTIC SMALL–OUTLINE PACKAGE

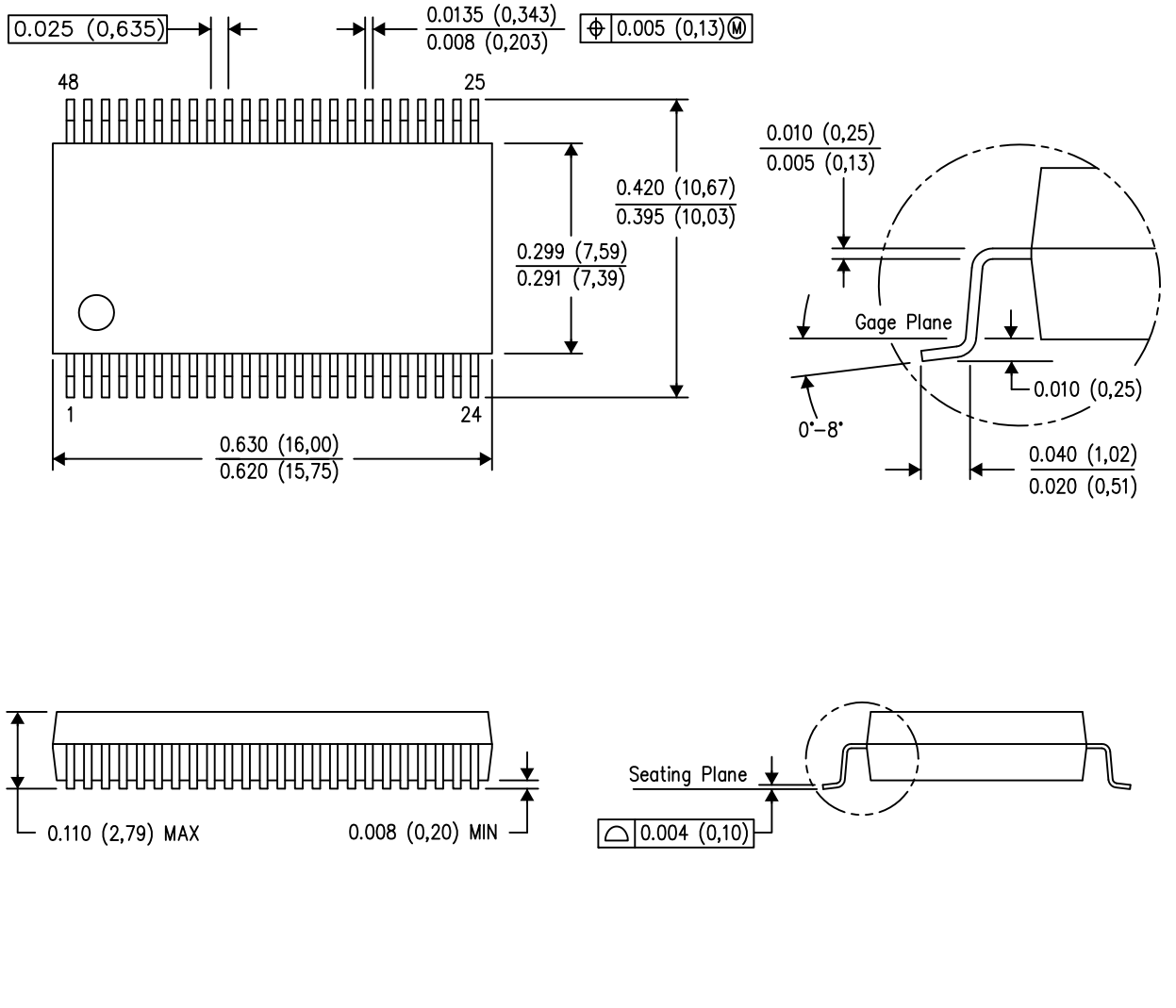

NOTES:
A. All linear dimensions are in inches (millimeters).
B. This drawing is subject to change without notice.
C. Body dimensions do not include mold flash or protrusion not to exceed 0.006 (0,15).
D. Falls within JEDEC MO–118

PowerPAD is a trademark of Texas Instruments.

IMPORTANT NOTICE AND DISCLAIMER

TI PROVIDES TECHNICAL AND RELIABILITY DATA (INCLUDING DATASHEETS), DESIGN RESOURCES (INCLUDING REFERENCE DESIGNS), APPLICATION OR OTHER DESIGN ADVICE, WEB TOOLS, SAFETY INFORMATION, AND OTHER RESOURCES “AS IS” AND WITH ALL FAULTS, AND DISCLAIMS ALL WARRANTIES, EXPRESS AND IMPLIED, INCLUDING WITHOUT LIMITATION ANY IMPLIED WARRANTIES OF MERCHANTABILITY, FITNESS FOR A PARTICULAR PURPOSE OR NON-INFRINGEMENT OF THIRD PARTY INTELLECTUAL PROPERTY RIGHTS.

These resources are intended for skilled developers designing with TI products. You are solely responsible for (1) selecting the appropriate TI products for your application, (2) designing, validating and testing your application, and (3) ensuring your application meets applicable standards, and any other safety, security, or other requirements. These resources are subject to change without notice. TI grants you permission to use these resources only for development of an application that uses the TI products described in the resource. Other reproduction and display of these resources is prohibited. No license is granted to any other TI intellectual property right or to any third party intellectual property right. TI disclaims responsibility for, and you will fully indemnify TI and its representatives against, any claims, damages, costs, losses, and liabilities arising out of your use of these resources.

TI’s products are provided subject to TI’s Terms of Sale (www.ti.com/legal/termsofsale.html) or other applicable terms available either on ti.com or provided in conjunction with such TI products. TI’s provision of these resources does not expand or otherwise alter TI’s applicable warranties or warranty disclaimers for TI products.

Mailing Address: Texas Instruments, Post Office Box 655303, Dallas, Texas 75265
Copyright © 2019, Texas Instruments Incorporated

Unikeyic Electronics

Global Electronic Components Distributor

Click to view pricing, inventory, delivery, and lifecycle information:

Texas Instruments:

MSP430G2403IPW28 OPA2541BM CC2520RHDR MSP430F2001TRSAT SN74GTL2006PWR
UA9637ACPS TLC085CDR TPS51125ARGER LMV358MMX/NOPB MSP430G2332IN20
MSP430F5172IRSBT TPS92200D2DDCR ADS8344E ISO124U/1K MSP430F5131IDA OPA643P
UCC27210DR DS90C383MTDX/NOPB MSP430F2112TRHBT MSP430F47127IPZ TLV990-28PFB
TPA6203A1DRBR TPS71710DCKR TPS7A8018DRBR BQ24314DSGR OPT3101RHFR PCM56U
SN74LVCZ240APW SN75LV4735DBLE TCAN332DR