PRODUCT DATA DRAWING

REVISION HISTORY			
REV	DESCRIPTION	DATE	APPROVED
A	DCN 53261	11/23	SEE PDM

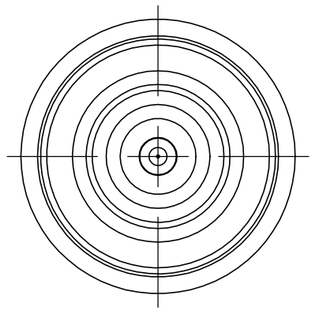

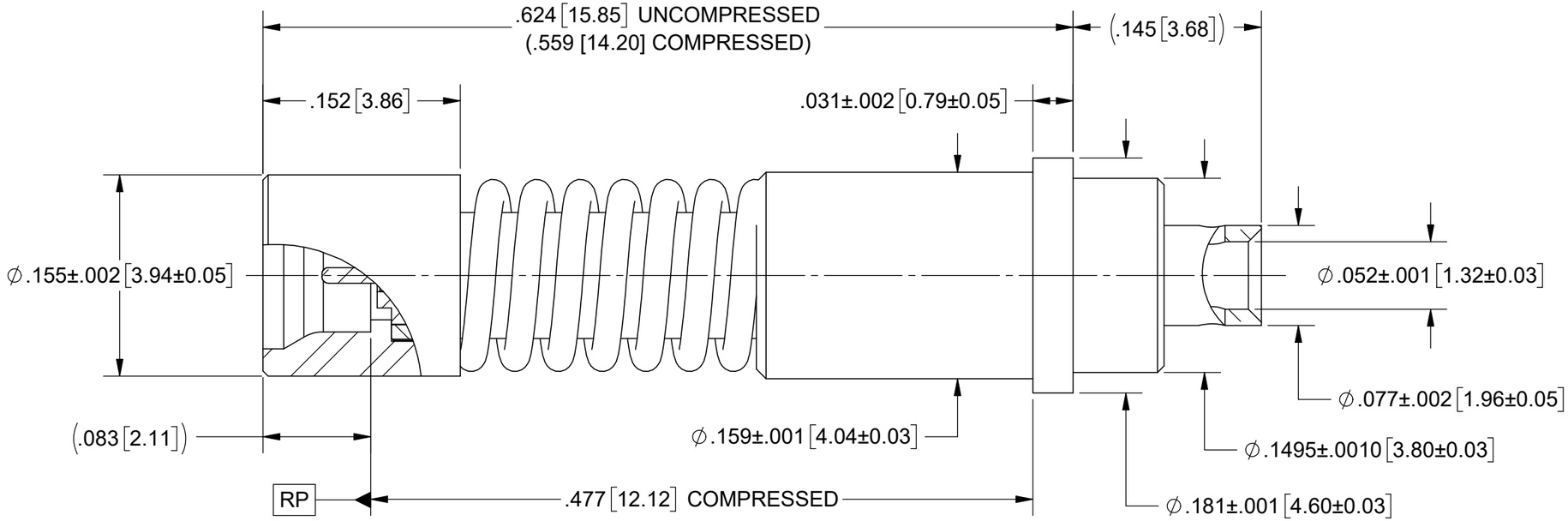

MATERIAL:

SHROUD & SLEEVE:	STAINLESS STEEL PER AMS-5640, ALLOY UNS S30300, TYPE 1
BODY & CONTACT:	BERYLLIUM COPPER PER ASTM B196, ALLOY No. UNS C17300, TD04
SPRING:	STAINLESS STEEL PER ASTM A313, TYPE 631 ALLOY UNS S17700
INSULATOR:	PTFE PER ASTM D1710, TYPE I, GRADE 1, CLASS B

FINISH:

SHROUD, SLEEVE & SPRING:	PASSIVATED PER AMS-2700, TYPE 2
BODY & CONTACT:	GOLD PER ASTM B488, TYPE II, CODE C, CLASS 1.27, OVER NICKEL PER AMS-QQ-N-290, CLASS 1, .00005" MIN.

PERFORMANCE:

IMPEDANCE:	50 OHMS
FREQ. RANGE:	DC TO 50.0 GHz.
DWV:	325 VRMS

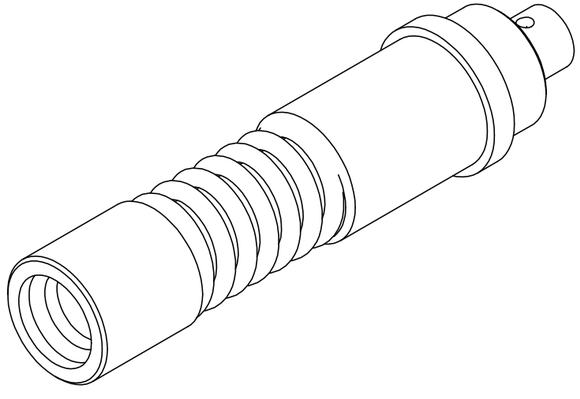

MATERIAL: SEE NOTES

FINISH: SEE NOTES

SURFACE AREA: N/A

PROPRIETARY

THE INFORMATION CONTAINED IN THIS DRAWING IS THE SOLE PROPERTY OF SV MICROWAVE, INC. ANY REPRODUCTION IN PART OR AS A WHOLE WITHOUT THE WRITTEN PERMISSION OF SV MICROWAVE, INC IS PROHIBITED.

DIMENSIONS ARE IN INCHES TOLERANCES:

FRACTIONAL: ±1/64 ANGULAR: X° ±1°0' X°X' ±15'

DECIMAL: .X ±.030 .XX ±.010 .XXX ±.005

INTERPRET DIMENSIONS AND TOLERANCES PER ASME Y14.5M - 1994

THIRD ANGLE PROJECTION

UNLESS OTHERWISE SPECIFIED

1) ALL DIMENSIONS ARE IN INCHES [MILLIMETERS]
2) ALL DIMENSIONS ARE AFTER PLATING.
3) BREAK CORNERS & EDGES .005 R. MAX.
4) CHAM. 1ST & LAST THREADS.
5) SURFACE ROUGHNESS 63-MIL-STD-10.
6) DIA.'S ON COMMON CENTERS TO BE CONCENTRIC WITHIN .005 T.I.R.
7) REMOVE ALL BURRS

DRAWN:	DTL 05/16/20
CHECKED:	SEE PDM
APPROVED:	SEE PDM

SV MICROWAVE Amphenol
www.svmicrowave.com

TITLE: SMPM SIZE 12 SOCKET CONTACT D38999 TO Ø.047 CABLE

SIZE B | DWG. NO. SF3211-60153

SCALE: 10:1 | SHEET 1 OF 1

Unikeyic Electronics

Global Electronic Components Distributor

Click to view pricing, inventory, delivery, and lifecycle information:

Amphenol:

DAPO15S365TLF DEM09P032N LD25S33E4GV00LF 68000-236HLF 86093967896755LF 54202-G0805CLF 70218-1116LF 68001-200HLF 69192-408HLF 70234-112LF 86093968813H45V1LF 91614-403ALF D15P13A6RV12LF 70430-164LF 86093968191755E3LF RJSBE5080C2 76384-316LF 86130202123355E1LF 54202-S08-07LF 67996-204HLF 863013A RJE061661210 LD15P33E4GV00LF CD15S13E4RV09LF DCMF37P 65781-158 68001-108HLF 68002116HLF 86093488314745V1LF 95157-140LF