Product data sheet



IM30-15NU0-ZU0

IMW

INDUCTIVE PROXIMITY SENSORS

SICK
Sensor Intelligence.



Illustration may differ

Ordering information

Type	Part no.
IM30-15NU0-ZU0	7902129

Included in delivery: BEF-MU-M30 (1)

Other models and accessories → www.sick.com/IMW

Detailed technical data

Features

Housing	Metric
Housing	Standard design
Thread size	M30 x 1.5
Diameter	Ø 30 mm
Sensing range S_n	15 mm
Safe sensing range S_a	12.15 mm
Installation type	Non-flush
Switching frequency	25 Hz [1] 30 Hz [2]
Connection type	Cable, 2-wire, 2 m
Output function	NC
Electrical wiring	AC/DC 2-wire
Enclosure rating	IP67 [3]
Items supplied	Mounting nut, brass, nickel-plated (2x)

[1] AC.
[2] DC.
[3] According to EN 60529.

Mechanics/electronics

Supply voltage	20 V AC/DC ... 250 V AC/DC
Voltage drop	≤ 6.5 V AC, ≤ 6 V DC

[1] Supply voltage U_B and constant ambient temperature Ta.
[2] Of Sr.
[3] Repeatability (T_a not constant).
[4] AC (+50 °C).
[5] AC (+80 °C).
[6] DC.
[7] 20 ms / 0.5 Hz.
[8] Miniature fuse to IEC 60217-2 Sheet 1, ≤ 2 A (quick-blow).
[9] Control of small electromagnetic loads with holding currents < 200 mA.
[10] Control of solenoids.

Time delay before availability	≤ 8 ms
Hysteresis	1 % ... 15 %
Reproducibility	≤ 10 % [1) 2) 3)]
Temperature drift (of S_r)	± 10 %
EMC	According to EN 60947-5-2 As per EN 55011, class B
Continuous current I_a	≤ 350 mA [4)] ≤ 250 mA [5)] ≤ 100 mA [6)]
Off-state current	≤ 2.5 mA (AC 250 V) ≤ 1.3 mA (AC 110 V) ≤ 0.8 mA (DC 24 V)
Minimum load current	≥ 5 mA
Short-time withstand current	2.2 A [7)]
Cable material	PUR/PVC
Conductor size	0.5 mm²
Short-circuit protection	[8)]
Power-up pulse protection	✓
Shock and vibration resistance	30 g, 11 ms / 10 ... 55 Hz, 1 mm
Ambient operating temperature	–25 °C ... +70 °C
Housing material	Brass, nickel-plated
Sensing face material	Plastic, PBT
Housing length	81 mm
Thread length	44 mm
Tightening torque, max.	≤ 50 Nm
Protection class	II
Rated insulation voltage U_i	250 V AC
Usage category	AC-140 [9)] DC-13 [10)]
Contamination rating	3
Rated impulse withstand voltage	4 kV

1) Supply voltage U_B and constant ambient temperature Ta.
2) Of Sr.
3) Repeatability (T_a not constant).
4) AC (+50 °C).
5) AC (+80 °C).
6) DC.
7) 20 ms / 0.5 Hz.
8) Miniature fuse to IEC 60217-2 Sheet 1, ≤ 2 A (quick-blow).
9) Control of small electromagnetic loads with holding currents < 200 mA.
10) Control of solenoids.

Safety-related parameters

$MTTF_D$	971 years
DC_{avg}	0 %

T_M (mission time)	20 years

Reduction factors

Note	The values are reference values which may vary
Stainless steel (V2A, 304)	Approx. 0.8
Aluminum (Al)	Approx. 0.45
Copper (Cu)	Approx. 0.4

Installation note

Remark	Associated graphic see "Installation"
A	30 mm
B	60 mm
C	30 mm
D	45 mm
E	30 mm
F	120 mm

Classifications

ECLASS 5.0	27270101
ECLASS 5.1.4	27270101
ECLASS 6.0	27270101
ECLASS 6.2	27270101
ECLASS 7.0	27270101
ECLASS 8.0	27270101
ECLASS 8.1	27270101
ECLASS 9.0	27270101
ECLASS 10.0	27270101
ECLASS 11.0	27270101
ECLASS 12.0	27274001
ETIM 5.0	EC002714
ETIM 6.0	EC002714
ETIM 7.0	EC002714
ETIM 8.0	EC002714
UNSPSC 16.0901	39122230

Installation note

Non-flush installation

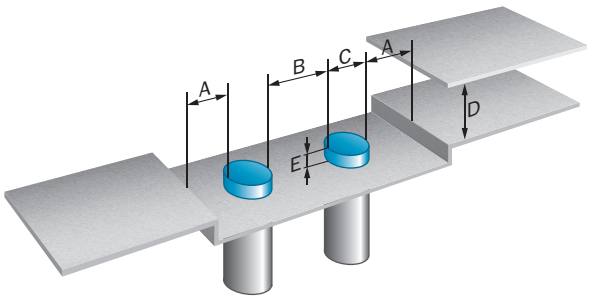

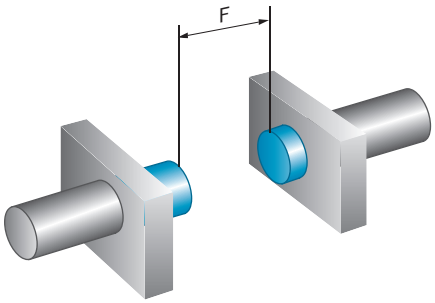

Connection type

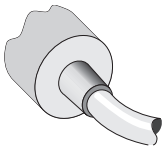

Connection diagram

Cd-121

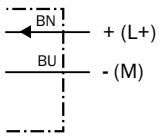

Miniature fuse to IEC60127-2
sheet 1, ≤ 2 A (fast acting)

Dimensional drawing (Dimensions in mm (inch))

IM30, AC/DC 2-wire, cable, non-flush

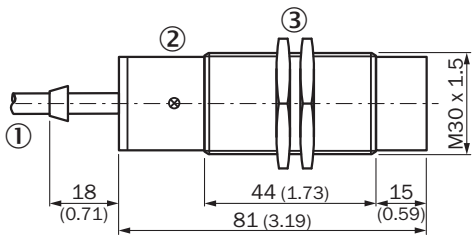

① Connection
② Display LED
③ Fastening nuts (2x); width across 36, metal

Recommended accessories

Other models and accessories ➜ www.sick.com/IMW

	Brief description	Type	Part no.
Universal bar clamp systems			
	Plate N10 for universal clamp bracket, M30, Zinc plated steel (sheet), Zinc die cast (clamping bracket), Universal clamp (5322626), mounting hardware	BEF-KHS-N10	2062372
Mounting brackets and plates			
	Mounting plate for M30 sensors, steel, zinc coated, without mounting hardware	BEF-WG-M30	5321871
	Mounting bracket for M30 sensors, steel, zinc coated, without mounting hardware	BEF-WN-M30	5308445

SICK AT A GLANCE

SICK is one of the leading manufacturers of intelligent sensors and sensor solutions for industrial applications. A unique range of products and services creates the perfect basis for controlling processes securely and efficiently, protecting individuals from accidents and preventing damage to the environment.

We have extensive experience in a wide range of industries and understand their processes and requirements. With intelligent sensors, we can deliver exactly what our customers need. In application centers in Europe, Asia and North America, system solutions are tested and optimized in accordance with customer specifications. All this makes us a reliable supplier and development partner.

Comprehensive services complete our offering: SICK LifeTime Services provide support throughout the machine life cycle and ensure safety and productivity.

For us, that is “Sensor Intelligence.”

WORLDWIDE PRESENCE:

Contacts and other locations –www.sick.com