GENERAL DESCRIPTION

XC6201 series are a set of Low Dropout LinearRegulator ICs implemented in CMOS technology. They can withstand voltage 10V. And they areavailable with low voltage drop and low quiescentcurrent ,widely used in audio,video and communication appliances.

FEATURES

- Low Power Consumption
- Low Voltage Drop
- Low Temperature Coefficient
- Withstanding Voltage 12V
- Quiescent Current 2.0μA
- Output Voltage Accuracy: tolerance ±2%
- High output current: 300mA

TYPICALAPPLICATIONS

- Battery-poweredEquipments
- CommunicationEquipments
- Audio/VideoEquipments
- SmartBattery Packs
- Smoke Detectors
- CO2 DETECTORS

PACKAGE/ORDERINFORMATION

Part Number	Package	Pin Configuration	Marking	QTY
XC6201P252MR	SOT-23-5L	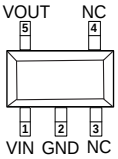	15T*	3000
XC6201P302MR			15Z*	3000
XC6201P332MR			162*	3000
XC6201P362MR			165*	3000
XC6201P502MR			16M*	3000
XC6201P252PR	SOT-89-3	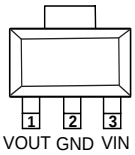	15T*	1000
XC6201P302PR			15Z*	1000
XC6201P332PR			162*	1000
XC6201P362PR			165*	1000
XC6201P502PR			16M*	1000

Notes:*Representing internal production number.

PIN DESCRIPTION

PIN No.		Name	Functions Description
SOT-23-5	SOT-89-3		
2	2	GND	ground
1	3	VIN	input
5	1	VOUT	output
3		NC	No Connect
4		NC	No Connect

PRODUCT NAMING

XC6201P XX X XX

- Series
- Output Voltage
  - 25 : 2.5V
  - 30 : 3.0V
  - 33 : 3.3V
  - 36 : 3.6V
  - 50 : 5.0V
- Output Voltage Accuracy
  - e.g.2: ±2.0%
- Package
  - MR : SOT23-5
  - PR : SOT89

FUNCTIONAL BLOCK DIAGRAM

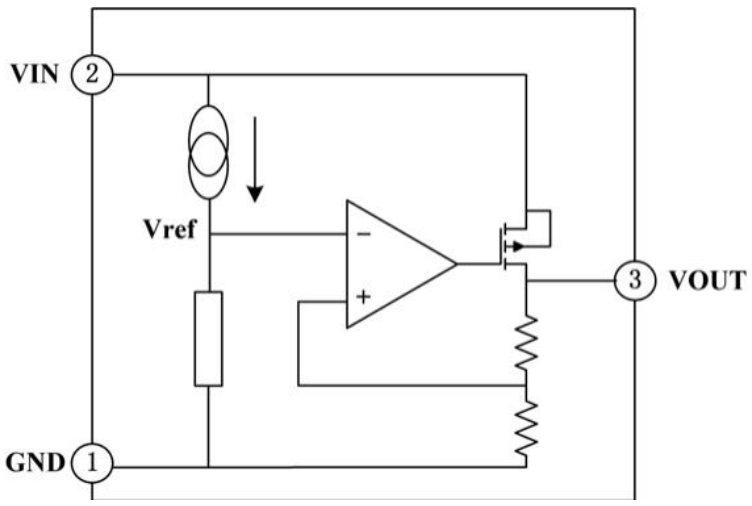

ABSOLUTEMAXIMUMRATINGS

Description	Symbol	Value range	Unit
Limit Power Voltage	V_{IN}	－0.3～+15	V
Storage Temperature Range	T_{STG}	－50～＋125	℃
Operating Free-air Temperature Range	T_A	－40～＋85	℃

Note : Stresses greater than those listed under “Absolute Maximum Ratings” may cause permanent damage to the device. These are stress ratings only, and functional operation of the device at these or any other conditions beyond those indicated under “Recommended Operating Conditions” is not implied. Exposure to “Absolute Maximum Ratings” for extended periods may affect device reliability.

HEATDISSIPATION

Description	Symbol	Package	Value range	Unit
Thermal resistance	θ_{JA}	SOT-89-3	200	℃/W
		SOT-23-5L	500	℃/W
Power dissipation	P_W	SOT-89-3	500	mW
		SOT-23-5L	200	mW

DCCHARACTERISTICS(unless otherwise noted T_A =＋25°C)(V_{IN}= V_{OUT}+2.0V，$C_{IN=}$ C_L=10uF，Ta=25°C, unless otherwise noted)

Series +2.5V OUTPUT

Parameter	Symbol	Test Condition	Min	Typ	Max	Unit
Output Voltage	V_{OUT}	V_{IN}=V_{OUT}+2.0V， I_{OUT}=10mA	2.450	2.500	2.550	V
Output Current	I_{OUT}	V_{IN}=V_{OUT}+2.0V	300	—	—	mA
Load Regulation	△ V_{OUT}	V_{IN}=V_{OUT}+2.0V 1mA≤I_{OUT}≤300mA	—	37	100	mV
Voltage Drop	V_{DIF}	I_{OUT}=10mA，△V_{OUT}=2%	—	35	55	mV
Quiescent Current	I_{SS}	—	—	2.0	3.0	μA
Line Regulation	△ V_{OUT}/ V_{OUT}* △ V_{IN}	V_{OUT}+1.0V≤V_{IN}≤12V， I_{OUT}=1mA	—	—	0.2	%/V
Input Voltage	V_{IN}	—	—	—	12	V
Temperature Coefficient	△ V_{OUT}/ △ T_A*V_{OUT}	V_{IN}=V_{OUT}+2.0V，I_{OUT}=10mA， -40°C≤T_A≤85°C	—	±100	—	ppm/ °C
Output Short Circuit Current	Ilim	V_{OUT}=0V	—	400	—	

Note : When V_{IN}=V_{OUT}+2.0V, as the output voltage declined 2%, the V_{DIF}=V_{IN}-V_{OUT}.

Series +3.0V OUTPUT

Parameter	Symbol	Test Condition	Min	Typ	Max	Unit
Output Voltage	V_{OUT}	$V_{IN}=V_{OUT}+2.0V$， $I_{OUT}=10mA$	2.94	3.0	3.06	V
Output Current	I_{OUT}	$V_{IN}=V_{OUT}+2.0V$	300	—	—	mA
Load Regulation	ΔV_{OUT}	$V_{IN}=V_{OUT}+2.0V$ $1mA\leq I_{OUT}\leq 300mA$	—	37	100	mV
Voltage Drop	V_{DIF}	$I_{OUT}=100mA$，$\triangle V_{OUT}=2\%$	—	210	300	mV
Quiescent Current	I_{SS}	—	—	2.0	3.0	μA
Line Regulation	$\Delta V_{OUT}/V_{OUT}*\Delta V_{IN}$	$V_{OUT}+1.0V\leq V_{IN}\leq 12V$， $I_{OUT}=1mA$	—	—	0.2	%/V
Input Voltage	V_{IN}	—	—	—	12	V
Temperature Coefficient	$\Delta V_{OUT}/\Delta T_A*V_{OUT}$	$V_{IN}=V_{OUT}+2.0V$，$I_{OUT}=10mA$， $-40°C\leq T_A\leq 85°C$	—	±100	—	ppm/°C
Output Short Circuit Current	Ilim	$V_{OUT}=0V$	—	400	—	mA

Note : When $V_{IN}=V_{OUT}+2.0V$, as the output voltage declined 2%, the $V_{DIF}=V_{IN}-V_{OUT}$.

Series +3.3V OUTPUT

Parameter	Symbol	Test Condition	Min	Typ	Max	Unit
Output Voltage	V_{OUT}	$V_{IN}=V_{OUT}+2.0V$， $I_{OUT}=10mA$	2.23	3.3	3.36	V
Output Current	I_{OUT}	$V_{IN}=V_{OUT}+2.0V$	300	—	—	mA
Load Regulation	ΔV_{OUT}	$V_{IN}=V_{OUT}+2.0V$ $1mA\leq I_{OUT}\leq 300mA$	—	37	100	mV
Voltage Drop	V_{DIF}	$I_{OUT}=100mA$，$\triangle V_{OUT}=2\%$	—	195	300	mV
Quiescent Current	I_{SS}	—	—	2.0	3.0	μA
Line Regulation	$\Delta V_{OUT}/V_{OUT}*\Delta V_{IN}$	$V_{OUT}+1.0V\leq V_{IN}\leq 12V$， $I_{OUT}=1mA$	—	—	0.2	%/V
Input Voltage	V_{IN}	—	—	—	12	V
Temperature Coefficient	$\Delta V_{OUT}/\Delta T_A*V_{OUT}$	$V_{IN}=V_{OUT}+2.0V$，$I_{OUT}=10mA$， $-40°C\leq T_A\leq 85°C$	—	±100	—	ppm/°C
Output Short Circuit Current	Ilim	$V_{OUT}=0V$	—	400	—	mA

Note : When $V_{IN}=V_{OUT}+2.0V$, as the output voltage declined 2%, the $V_{DIF}=V_{IN}-V_{OUT}$.

Series +3.6V OUTPUT

Parameter	Symbol	Test Condition	Min	Typ	Max	Unit
Output Voltage	V_{OUT}	$V_{IN}=V_{OUT}+2.0V$， $I_{OUT}=10mA$	3.52	3.6	3.67	V
Output Current	I_{OUT}	$V_{IN}=V_{OUT}+2.0V$	300	—	—	mA
Load Regulation	△ V_{OUT}	$V_{IN}=V_{OUT}+2.0V$ $1mA\leq I_{OUT}\leq 300mA$	—	37	100	mV
Voltage Drop	V_{DIF}	$I_{OUT}=100mA$，$\triangle V_{OUT}=2\%$	—	180	300	mV
Quiescent Current	I_{SS}	—	—	2.0	3.0	μA
Line Regulation	△ V_{OUT}/ V_{OUT}* △ V_{IN}	$V_{OUT}+1.0V\leq V_{IN}\leq 12V$， $I_{OUT}=1mA$	—	—	0.2	%/V
Input Voltage	V_{IN}	—	—	—	12	V
Temperature Coefficient	△ V_{OUT}/ △ T_A*V_{OUT}	$V_{IN}=V_{OUT}+2.0V$，$I_{OUT}=10mA$， $-40°C\leq T_A\leq 85°C$	—	±100	—	ppm/ °C
Output Short Circuit Current	Ilim	$V_{OUT}=0V$	—	400	—	

Note : When $V_{IN}=V_{OUT}+2.0V$, as the output voltage declined 2%, the $V_{DIF}=V_{IN}-V_{OUT}$.

Series +5.0V OUTPUT

Parameter	Symbol	Test Condition	Min	Typ	Max	Unit
Output Voltage	V_{OUT}	$V_{IN}=V_{OUT}+2.0V$， $I_{OUT}=10mA$	4.9	5.0	5.1	V
Output Current	I_{OUT}	$V_{IN}=V_{OUT}+2.0V$	300	—	—	mA
Load Regulation	△ V_{OUT}	$V_{IN}=V_{OUT}+2.0V$ $1mA\leq I_{OUT}\leq 300mA$	—	37	100	mV
Voltage Drop	V_{DIF}	$I_{OUT}=100mA$，$\triangle V_{OUT}=2\%$	—	170	300	mV
Quiescent Current	I_{SS}	—	—	2.0	3.0	μA
Line Regulation	△ V_{OUT}/ V_{OUT}* △ V_{IN}	$V_{OUT}+1.0V\leq V_{IN}\leq 12V$， $I_{OUT}=1mA$	—	—	0.2	%/V
Input Voltage	V_{IN}	—	—	—	12	V
Temperature Coefficient	△ V_{OUT}/ △ T_A*V_{OUT}	$V_{IN}=V_{OUT}+2.0V$，$I_{OUT}=10mA$， $-40°C\leq T_A\leq 85°C$	—	±100	—	ppm/ °C
Output Short Circuit Current	Ilim	$V_{OUT}=0V$	—	400	—	mA

Note : When $V_{IN}=V_{OUT}+2.0V$, as the output voltage declined 2%, the $V_{DIF}=V_{IN}-V_{OUT}$.

FUNCTIONALDESCRIPTION

XC6201 series are linear voltage regulator ICs withstanding 12V voltage. The series IC consists of a voltage reference, an error amplifiera current limiter and a phase compensationcircuit plus a driver transistor. The output stabilization capacitor is also compatible with low ESR ceramic capacitors.

The over current protection circuit and the over voltage protection circuit are built-in. The protection circuit will operate when the output current or input voltage reaches limit level.

TYPICALAPPLICATIONCIRCUIT

Basic Circuit

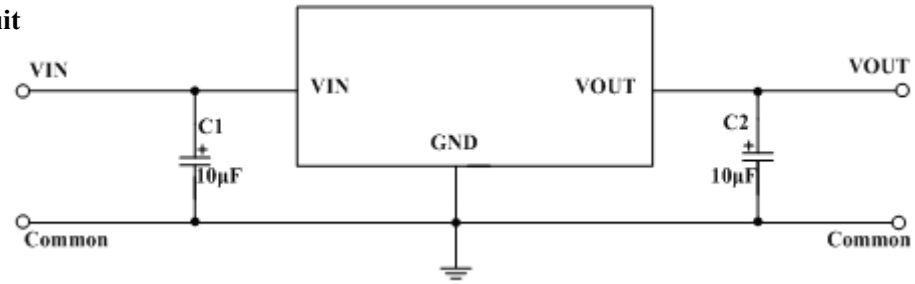

SOT-23-5L Package Outline Dimensions

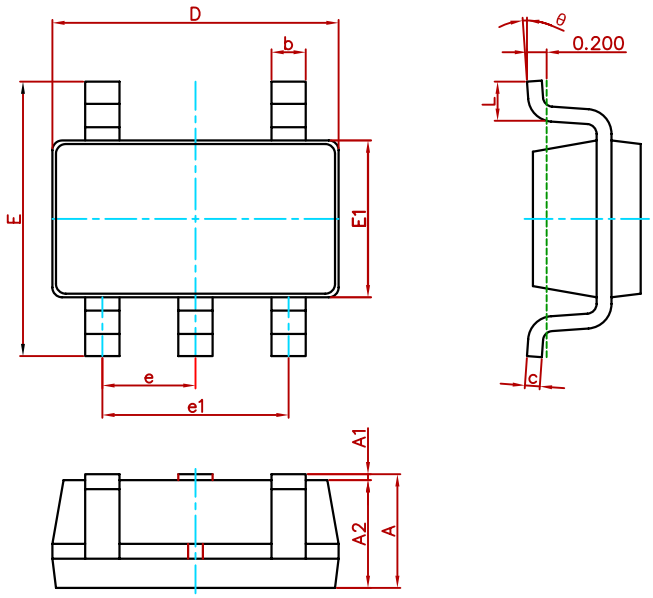

Symbol	Dimensions In Millimeters		Dimensions In Inches	
	Min.	Max.	Min.	Max.
A	1.050	1.250	0.041	0.049
A1	0.000	0.100	0.000	0.004
A2	1.050	1.150	0.041	0.045
b	0.300	0.500	0.012	0.020
c	0.100	0.200	0.004	0.008
D	2.820	3.020	0.111	0.119
E	2.650	2.950	0.104	0.116
E1	1.500	1.700	0.059	0.067
e	0.950(BSC)		0.037(BSC)	
e1	1.800	2.000	0.071	0.079
L	0.300	0.600	0.012	0.024
θ	0°	8°	0°	8°

SOT-23-5L Suggested Pad Layout

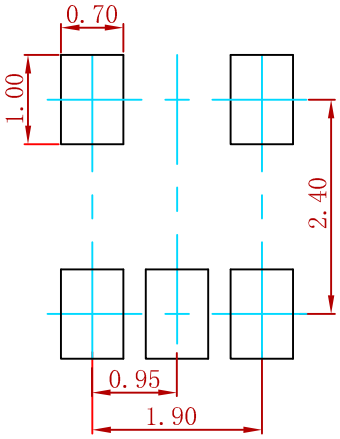

Note:
1.Controlling dimension:in millimeters.
2.General tolerance:± 0.05mm.
3.The pad layout is for reference purposes only.

SOT-89-3 PACKAGE MECHANICAL DATA

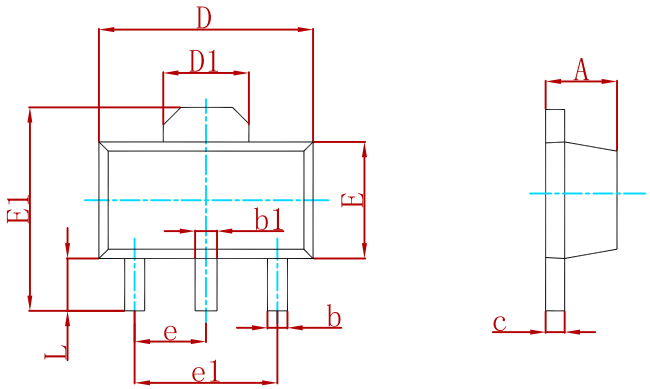

Symbol	Dimensions In Millimeters		Dimensions In Inches	
	Min	Max	Min	Max
A	1.400	1.600	0.055	0.063
b	0.320	0.520	0.013	0.020
b1	0.400	0.580	0.016	0.023
c	0.350	0.440	0.014	0.017
D	4.400	4.600	0.173	0.181
D1	1.550 REF.		0.061 REF.	
E	2.300	2.600	0.091	0.102
E1	3.940	4.250	0.155	0.167
e	1.500 TYP.		0.060 TYP.	
e1	3.000 TYP.		0.118 TYP.	
L	0.900	1.200	0.035	0.047

SOT-89-3 Suggested Pad Layout

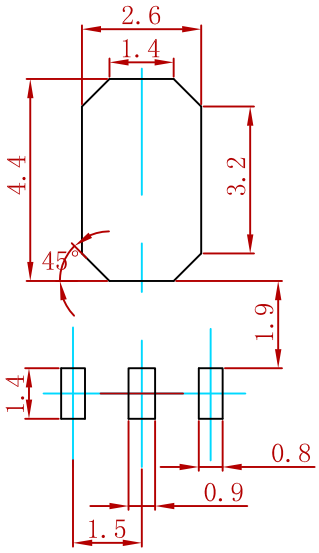

Note:
1.Controlling dimension:in millimeters.
2.General tolerance:±0.05mm.
3.The pad layout is for reference purposes only.