MATERIAL NO.	ENGINEERING NO.	FINISHED LENGTH
1200700183	8R4006A18A060	6 IN [0.5FT]
1200700185	8R4006A18A1201	12 IN [1FT]
1200700186	8R4006A18F040	4FT [1.2M]
1200704010	8R4006A18M120	12M [39FT 4 IN]

PART NUMBER LEGEND (A1)

8R4006A18A1201

FINISHED LENGTH:
A120= 12 INCHES
F010= 1 FEET
M005= 0.5 METER
M010= 1 METER
M100= 10 METER

SHELL MATERIAL/FINISH:
BLANK= ALUMINUM/BLACK ANODIZED
1= 303 STAINLESS STEEL

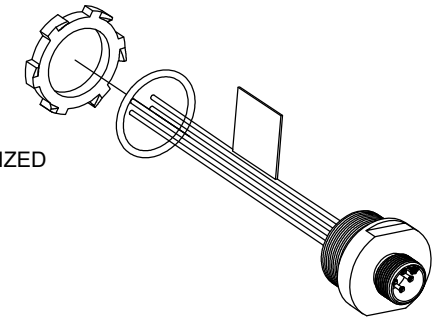

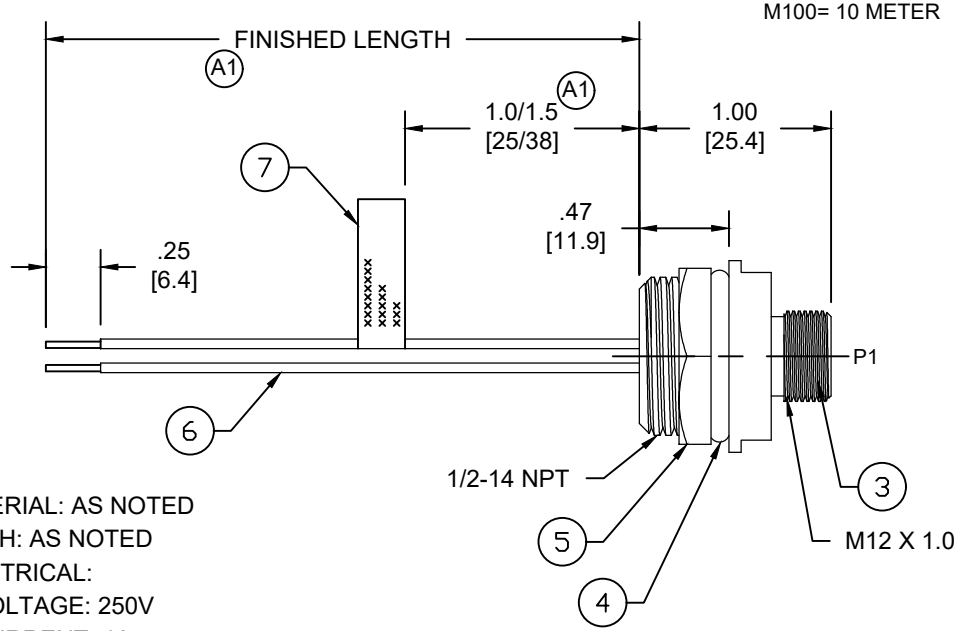

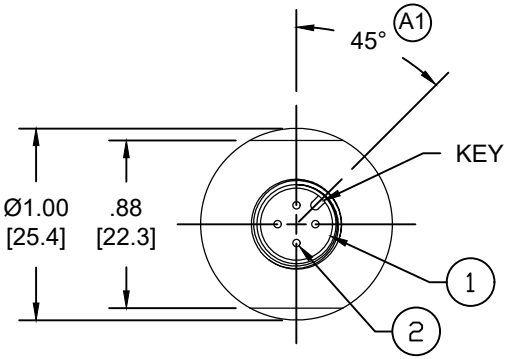

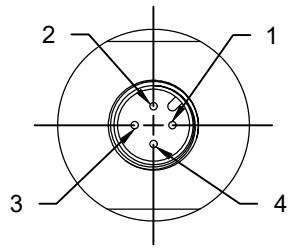

MALE FACE VIEW

NOTES:
1. MATERIAL: AS NOTED
2. FINISH: AS NOTED
3. ELECTRICAL:
   VOLTAGE: 250V
   CURRENT: 4A
4. TEMP RATING: -20°C TO +80°C
5. PROTECTION: IP67 (WHEN MATED)
6. UL LISTED FILE: E152210
   CSA CERTIFIED FILE: LR6837
7. ALL DIMENSIONS ARE FOR REFERENCE UNLESS TOLERANCED OR NOTED OTHERWISE

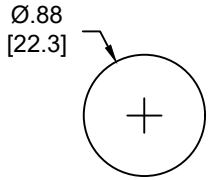

TYPICAL KNOCKOUT HOLE



WIRING DIAGRAM

(A1)

CABLE LENGTH TOLERANCES
<.3M [1FT]: +19mm-0 [+.75in-0]
.3 - .9M [1 - 3FT]: +44.5mm-0 [+1.75in-0]
.9 - 1.8M [3 - 6FT]: +55.6mm-0 [+2.19in-0]
1.8 - 3.7M [6 - 12FT: +88.9mm-0 [+3.50in-0]
3.7 - 7.3M [12 - 24FT]: +165.1mm-0 [+6.50in-0]
7.3-14.6M [24 - 48FT]: +317.5mm-0 [+12.50in-0]
14.6 - 30.5M [48-100FT]: +622.3mm-0 [+24.50in-0]
OVER 30M [100FT] +2% OF FINISHED LENGTH

ITEM	COMPONENT	MATERIAL	FINISH
7	FLAG LABEL	VINYL	CLEAR/YELLOW
6	CONDUCTOR -22AWG, 26 x #36 STRANDING, 300 VOLTS	PVC	SEE WIRING DIAGRAM
5	LOCKNUT	STEEL	ZINC PLATED
4	O-RING	NITRILE	BLACK
3	RECEPTACLE SHELL	SEE P/N LEGEND	SEE P/N LEGEND
2	CONTACT PIN	COPPER ALLOY	GOLD OVER NICKEL
1	INSERT	NYLON	BLACK

DOCUMENT STATUS: P1 | RELEASE DATE: 2024/02/20 14:59:12

THIS DRAWING CONTAINS INFORMATION THAT IS PROPRIETARY TO MOLEX ELECTRONIC TECHNOLOGIES, LLC AND SHOULD NOT BE USED WITHOUT WRITTEN PERMISSION

FUNCTIONAL SYMBOLS
FA=0
FC=0
FB=0
DIVISIONAL SYMBOLS

DIMENSION UNITS: INCH/MM
SCALE: NTS

GENERAL TOLERANCES (UNLESS SPECIFIED)

	mm	INCH
4 PLACES	±----	±----
3 PLACES	±----	±----
2 PLACES	±----	±----
1 PLACE	±----	±----
0 PLACES	±----	±----
ANGULAR TOL ±	---- °	

DRAFT WHERE APPLICABLE MUST REMAIN WITHIN DIMENSIONS

CURRENT REV DESC: MODIFIED PN CHART & FINISHED LENGTH DIM. ADDED PN LEGEND, KEY ANGLE, CABLE TOL CHART & LABEL DIM.

EC NO: 775458
DRWN: ABENJAMINLW 2024/01/24
CHK'D: PDODDAMANEMY 2024/01/29
APPR: BWOODMAN 2024/02/20

INITIAL REVISION:
DRWN: BWOODMAN 2009/03/31
APPR: JFMURPHY 2009/04/08

THIRD ANGLE PROJECTION | DRAWING: A-SIZE | SERIES: 120070

molex

MICRO-CHANGE RECEPTACLE, A-SIZE
4 POLE, MALE, STRAIGHT, SINGLE KEY,
#22 AWG

PRODUCT CUSTOMER DRAWING

DOCUMENT NUMBER	DOC TYPE	DOC PART	REVISION
SD-120070-005	PSD	001	A1

MATERIAL NUMBER	CUSTOMER	SHEET NUMBER
SEE CHART	GENERAL MARKET	1 OF 1

FORMAT: IN-ACAD-tb-prod-A
REVISION: B
DATE: 2020/01/14