2-colour Display
High Precision Digital Pressure Switch
Series ZSE30A/ISE30A

Features

- *Adjustable vacuum, positive and compound pressure switch with display.*
- *Large , easy to read, 2 colour (green/red), 4 digit display.*
- *Easy operation: 3-step setting and copy display.*
- *Analogue output: 4-20mA or 1-5V.*
- *Switch output: 2 pnp/npn or 1 pnp/npn.*
- *Replaceable one touch fittings.*
- *Can be panel mounted.*
- *Choice of mounting brackets also available.*
- *Additional functions: Secret code setting function, power-saving function, resolution-switch function.*



Specifications

Model			ZSE30A (Vacuum pressure)	ZSE30AF (Compound pressure)	ISE30A (Positive pressure)
Rated pressure range			0.0 to –101.0 kPa	–100.0 to 100.0 kPa	–0.100 to 1.000 MPa
Regulating pressure range			10.0 to –105.0 kPa	–105.0 to 105.0 kPa	–0.105 to 1.050 MPa
Proof pressure			500 kPa	500 kPa	1.5 MPa
Setting/display resolution			0.1 kPa	0.1 kPa	0.001 MPa
Applicable fluid			Air, non-corrosive gas, non-flammable gas		
Power supply voltage			12 to 24 VDC ±10%, Ripple (p-p) 10% or less (with power supply polarity protection)		
Current consumption			40 mA or less		
Switch output			NPN or PNP open collector 1 output, NPN or PNP open collector 2 outputs (selectable)		
	Maximum load current		80 mA		
	Maximum applied voltage		28 V (with NPN output)		
	Residual voltage		1 V or less (with load current of 80 mA)		
	Response time		2.5 ms or less (with anti-chattering function: 20, 100, 500, 1000, 2000 ms)		
	Short circuit protection		With short circuit protection		
Repeatability			±0.2% F.S. ±1 digit		
Hysteresis	Hysteresis mode		Variable (0 or above) Note 1)		
	Window comparator mode				
Analogue output	Voltage output Note 2)	Output voltage	1 to 5V ±2.5% F.S. or less (with rated pressure range)		0.6 to 5 V ±2.5% F.S. or less (with rated pressure range)
		Linearity	±1% F.S. or less		
		Output impedance	Approx. 1 kΩ		
	Current output Note 3)	Output current	4 to 20 mA ±2.5% F.S. or less (with rated pressure range)		2.4 to 20 mA ±2.5% F.S. or less (with rated pressure range)
		Linearity	±1% F.S. or less		
		Load impedance	Maximum load impedance: 300 Ω with power supply voltage of 12 V; 600 Ω with power supply voltage of 24 V Minimum load impedance: 50 Ω		
Display			4-digit, 7-segment, 2-colour LCD (Red and Green)		
Display accuracy			±2% F.S. ±1 digit (ambient temperature of 25 ±3°C)		
Indicator light			Lights up when switch output is ON. OUT1: Green, OUT2: Red		
Environment resistance	Enclosure		IP40		
	Operating temperature range		Operating: 0 to 50°C, Stored: –10 to 60°C (no freezing or condensation)		
	Operating humidity range		Operating/Stored: 35 to 85% RH (no condensation)		
	Withstand voltage		1000 VAC for 1 minute between live parts and enclosure		
	Insulation resistance		50 MΩ or more between live parts and enclosure (at 500 VDC Mega)		
	Vibration resistance		10 to 150 Hz, 1.5 mm amplitude (or 20 m/s^2 acceleration), in X, Y, Z directions, for 2 hours each (Non-energized)		
	Impact resistance		100 m/s^2 in X, Y, Z directions, 3 times each (non-energised)		
Temperature characteristics			±2% F.S. (based on 25°C)		
Lead wire			Oilproof heavy-duty vinyl cable, 3 cores ø3.5, 2 m 4 cores Conductor area: 0.15 mm^2 (AWG26), Insulator O.D.: 1.0 mm		
Standards			CE Marking, UL/CSA, RoHS compliance		

Note 1) If applied pressure fluctuates near the set value, set the hysteresis above the fluctuation range to prevent chattering.
Note 2) When analogue the voltage output is selected, a simultaneous selection of switch output and current output is not available.
Note 3) When analogue the current output is selected, a simultaneous selection of switch output and voltage output is not available.

FOR MORE DETAILS
SEE OUR SPECIFIC CATALOGUES,
PRODUCTS CD's OR ONLINE INFORMATION

How to order

Output

N	NPN open collector 1 output
P	PNP open collector 1 output
A	NPN open collector 2 outputs
B	PNP open collector 2 outputs
C Note)	NPN open collector 1 output + Analogue voltage output
D Note)	NPN open collector 1 output + Analogue current output
E Note)	PNP open collector 1 output + Analogue voltage output
F Note)	PNP open collector 1 output + Analogue current output

Note) Made to Order

Rated pressure range

ISE30A	–0.1 to 1 MPa

For positive pressure: **ISE30A – 01 – N – M**

For vacuum/compound pressure: **ZSE30A – 01 – N – M**

Rated pressure range

ZSE30A	0 to –101 kPa
ZSE30AF	–100 to 100 kPa

Piping

01	R1/8 (M5 female threaded)	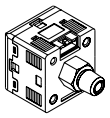
C4H	One-touch fitting ø4 mm, ø5/32 inch	Straight type 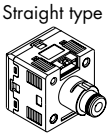
C6H	One-touch fitting ø6 mm	
C4L	One-touch fitting ø4 mm, ø5/32 inch	Elbow type 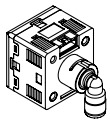
C6L	One-touch fitting ø6 mm	

Display unit

—	With unit display switching function
M	Fixed SI unit Note 2)
P Note 1)	With unit display switching function (Initial value PSI)

Note 1) Made to Order
Note 2) Fixed unit kPa, MPa

Option 1

—	Without lead wire	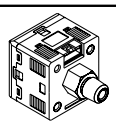
L	Lead wire with connector (Lead wire length 2 m) Note)	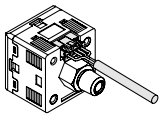
G	Lead wire with connector (lead wire length 2 m) Note) and with connector cover	Connector cover 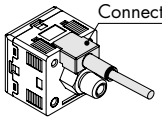

Note) For output types N and P, the number of core of lead wires will be 3, and for other types, it will be 4.

Accesories for mounting

—	None
ZS-28-A1	Bracket A 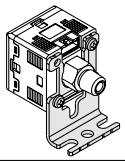
ZS-28-A2	Bracket B 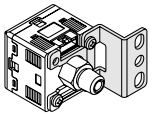
ZS-27-C	Panel mount adapter 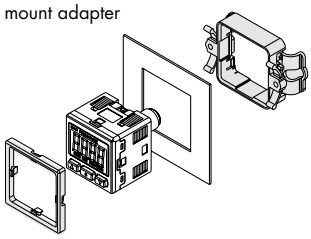
ZS-27-D	Panel mount adapter + front protection cover 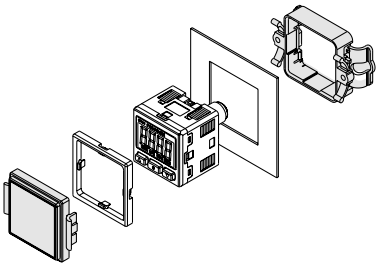

Piping Specifications

Model		01	C4H	C6H	C4L	C6L
Port size		R1/8 M5 x 0.8	—	—	—	—
	One-touch fitting, Straight type	—	ø4 mm ø5/32 inch	ø6 mm	—	—
	One-touch fitting, Elbow type	—	—	—	ø4 mm ø5/32 inch	ø6 mm
Wetted parts material	Sensor pressure receiving area	Sensor pressure receiving area: Silicon				
	Piping port	C3602 (electroless nickel plated) O-ring: HNBR	PBT, POM, Stainless steel 304, C3604 (electroless nickel plated) O-ring: NBR			
Weight	Including lead wire with connector (3 cores, 2 m)	81 g	70 g	71 g	75 g	73 g
	Including lead wire with connector (4 cores, 2 m)	85 g	74 g	75 g	79 g	77 g
	Excluding lead wire with connector	43 g	32 g	33 g	37 g	35 g

Optional Part No.

When optional parts are required separately, use the following part numbers to place an order.

Part no.	Option	Note
ZS-27-01	Front protection cover	
ZS-38-3L	Lead wire with connector	3 cores, for 1 output, 2 m
ZS-38-4L	Lead wire with connector	4 cores, for 2 outputs, 2 m
ZS-38-3G	Lead wire with connector (with connector cover)	3 cores, for 1 output, 2 m
ZS-38-4G	Lead wire with connector (with connector cover)	4 cores, for 2 outputs, 2 m

Part no.	Option	Note
ZS-38-5L	Lead wire with a connector for copying	3 cores, copy function, 1 m
ZS-38-U	Lead wire unit with a connector for copying	Copy function (up to 10 slaves)
ZS-38-C4H	One-touch fittings ø4 mm straight	O-ring, one-touch clip included
ZS-38-C6H	One-touch fittings ø6 mm straight	O-ring, one-touch clip included
ZS-38-N7H	One-touch fittings ø1/4 inch straight	O-ring, one-touch clip included
ZS-38-C4L	One-touch fittings ø4 mm elbow	O-ring, one-touch clip included
ZS-38-C6L	One-touch fittings ø6 mm elbow	O-ring, one-touch clip included
ZS-38-N7L	One-touch fittings ø1/4 inch elbow	O-ring, one-touch clip included
ZS-38-H	Operating manual CD-ROM	

Dimensions

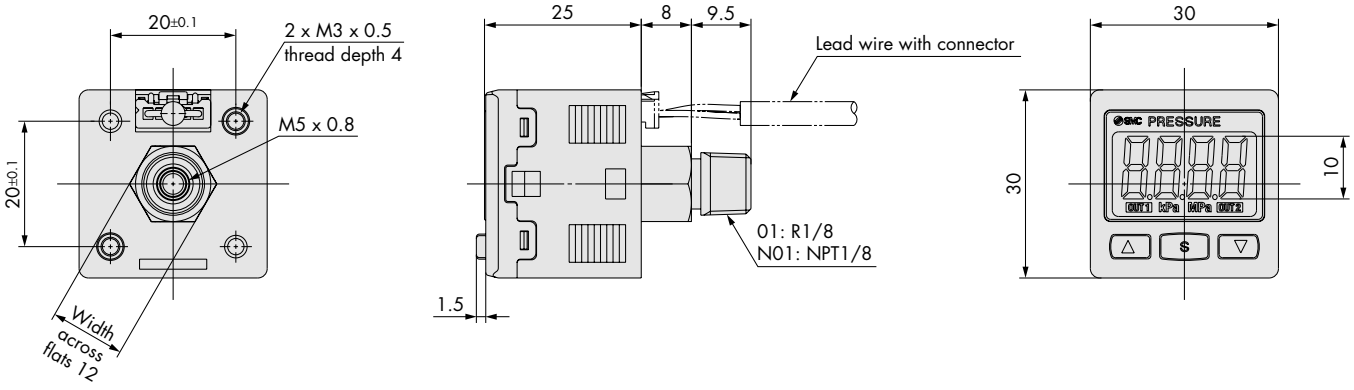

Straight

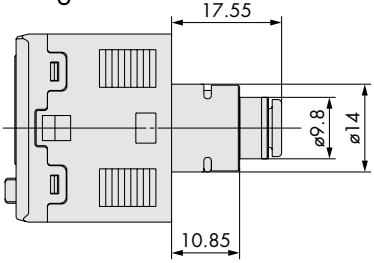

Elbow

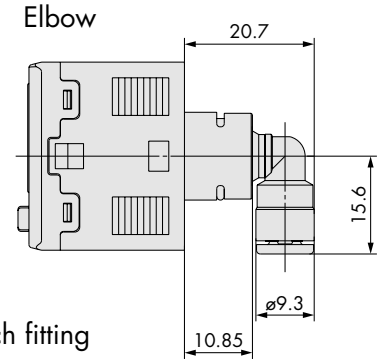

With one-touch fitting

One-touch fitting type	Straight		Elbow		
	A	B	A	B	C
ø3	17.55	9.8	20.07	9.3	15.6
ø4	17.95	10	22.85	11.6	16.1

With bracket

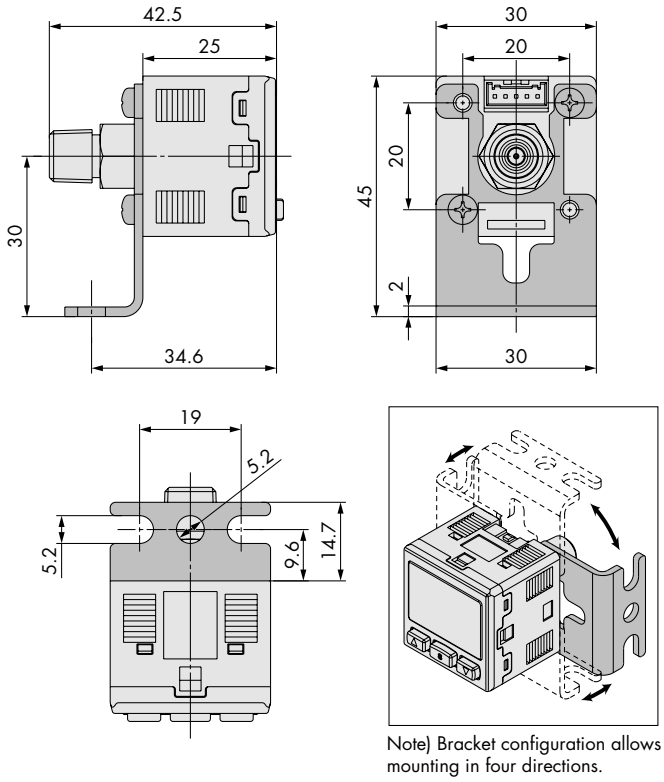

Bracket A

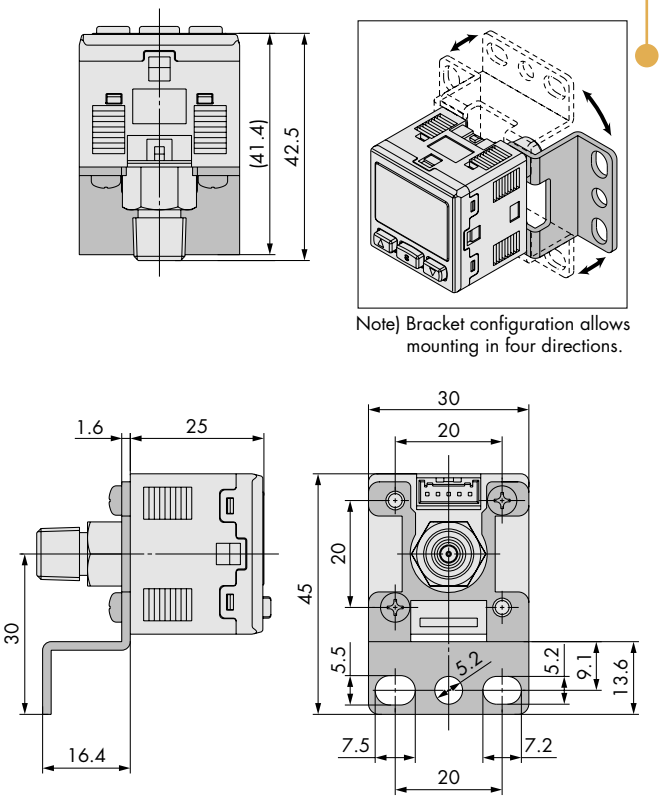

Bracket B

Dimensions

Panel mount

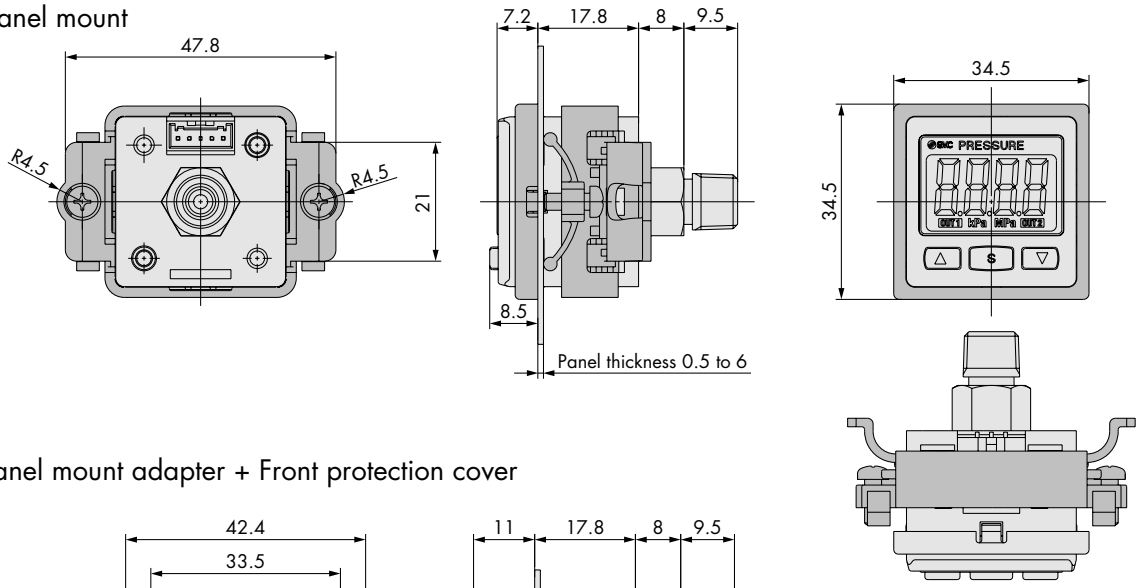

Panel mount adapter + Front protection cover

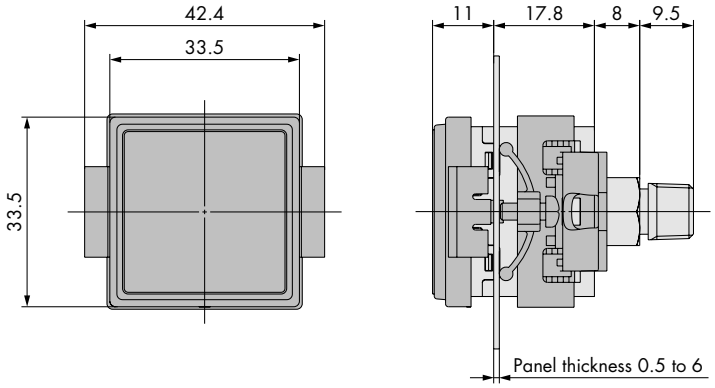

Dimensions

Panel fitting dimensions

1 pc. mounting

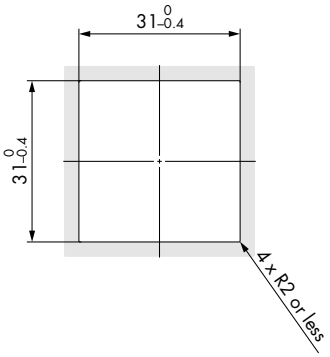

Multiple (2 pcs. or more) horizontal mounting

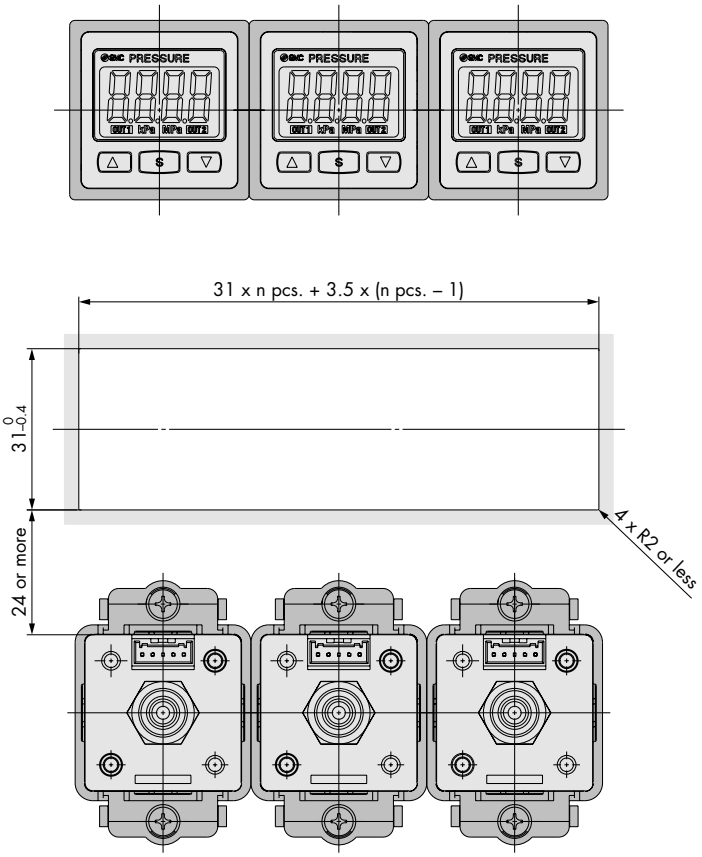

Multiple (2 pcs. or more) vertical mounting

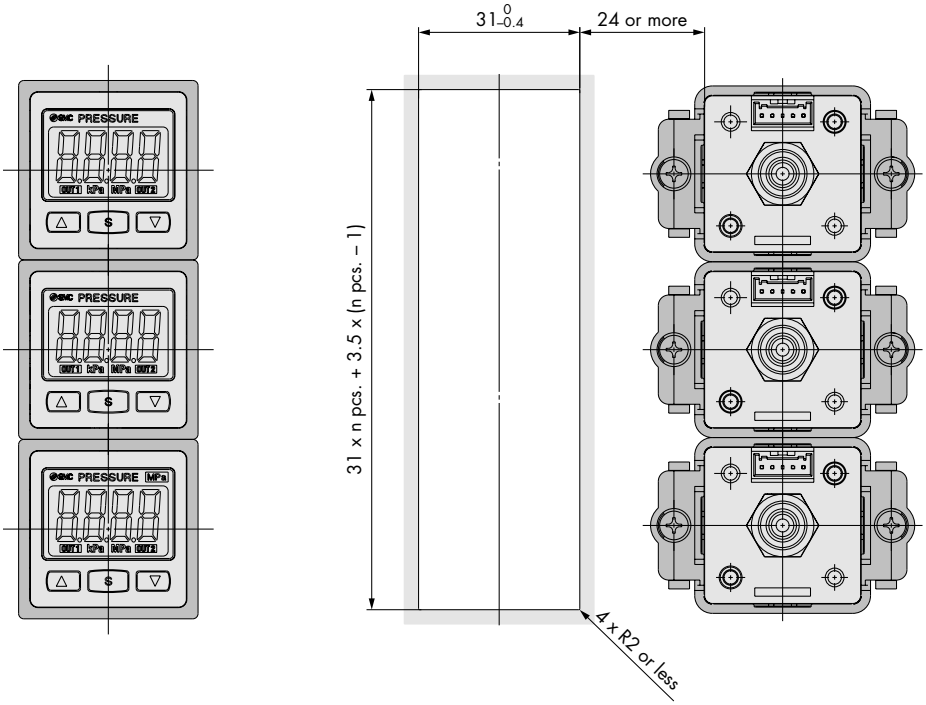

High Precision Digital Pressure Switch

Series ZSE40/ISE40



Features

- *Integrated air pressure or vacuum sensor, IP65 construction for damp/dirty areas.*
- *Dedicated model for compound pressure (vacuum to low positive pressure).*
- *Two independently programmable outputs, hysteresis or window comparator operation.*
- *Can be panel or wall mounted plus choice of mounting brackets available.*
- *Digital or digital + analogue outputs.*
- *Autoshift input for remote recalibration, auto preset, NO/NC switching and display zero functions.*
- *Fast response times, adjustable down to 2.5mS.*
- *Threaded or one-touch fitting pressure connections.*
- *Can display metric or imperial units.*

How to Order

For positive pressure: ISE40 — 01 — 22 — L

For vacuum/compound pressure: ZSE40 — 01 — 22 — L

Set pressure range

Nil	10.0 to –101.3 kPa	For vacuum pressure
F	–100.0 to 100.0 kPa	For compound pressure

Piping specifications

01: R 1/8 (With M5 female threads) 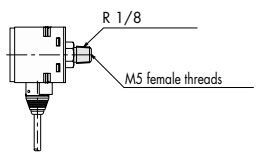	WF1: G1/8 Reverse pressure two directions 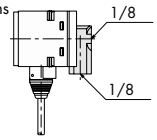
* C4: With ø4 One-touch fitting * C6: With ø6 One-touch fitting Wall mount 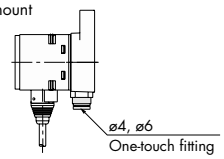	* M5: M5 (Female threads) Wall mount 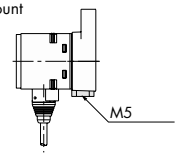

* Option

Lead wire length

L	3 m

Input/Output specifications

22	NPN open collector 2 outputs + analog output
30 *	NPN open collector 2 outputs + auto shift input
62 *	PNP open collector 2 outputs + analog output
70 *	PNP open collector 2 outputs + auto shift input

* Option

Note

When equipped with auto shift function, the following ranges can be set.

Set pressure range	Setting range
–100.0 to 100.0 kPa	–100.0 to 100.0 kPa
10.0 to –101.3 kPa	–101.3 to 101.3 kPa
–0.1 to 1.000 MPa	–1.000 to 1.000 MPa

Accessories

Nil	None
ZS-24-A	Bracket A 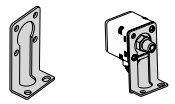
ZS-24-B	Bracket B 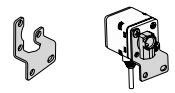
ZS-22-A	Panel mount 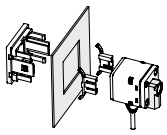
ZS-24-C	Panel mount + Front protective cover 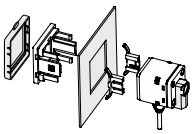

Specifications

		ZSE40F (Compound pressure)	ZSE40 (Vacuum pressure)	ISE40 (Positive pressure)
Rated pressure range		–100.0 to 100.0 kPa	0.0 to –101.3 kPa	0.000 to 1.000 MPa
Operating pressure range/Set pressure range		–100.0 to 100.0 kPa	10.0 to –101.3 kPa	–0.100 to 1.000 MPa
Withstand pressure		500 kPa		1.5 MPa
Set pressure resolution	kPa	0.1		—
	MPa	—		0.001
	kgf/cm²	0.001		0.01
	bar	0.001		0.01
	psi	0.02	0.01	0.1
	mmHg	1		—
	InHg	0.1		—
Applicable fluid		Air, Non-corrosive/Non-flammable gas		
Power supply voltage		12 to 24 VDC ±10%, Ripple (p-p) 10% or less		
Current consumption		55 mA or less		
Switch output		NPN or PNP 2 outputs Max. load current : 80 mA Max. applied voltage: 30 VDC (With NPN output) Residual voltage : 1 V or less (With 80 mA load current)		
Repeatability		±0.2% F.S. ±1digit or less		
Hysteresis	Hysteresis mode	Variable		
	Window comparator mode	Fixed (3 digits) Note4)		
Response time (With anti-chattering function)		2.5 ms or less (With anti-chattering function: 24 ms, 192 ms and 768 ms selections)		
Output short circuit protection		Yes		
Display		3 1/2 digit LED display (Sampling cycle: 5 times/sec.)		
Display accuracy		±2% F.S. ±1 digit or less (at ambient temperature of 25 ±3 C)		
Indicator light		Green LED (OUT1: Lights when ON), Red LED (OUT2: Lights when ON)		
Analogue output Note 1)		Output voltage: 1 to 5 V ±5% F.S. or less (in rated pressure range) Linearity: ±1% F.S. or less Output impedance: Approx. 1 kΩ	Output voltage: 1 to 5 V ±2.5% F.S. or less (in rated pressure range) Linearity: ±1% F.S. or less Output impedance: Approx. 1 kΩ	
Auto shift input Note 2)		No-voltage input (Reed or solid state), input 5 ms or more		
Environmental resistance	Enclosure	IP65		
	Ambient temperature range	Operating: 0 to 50°C, Stored: –10 to 60°C (No condensation or freezing)		
	Ambient humidity range	Operating/Stored: 35 to 85% RH (No condensation)		
	Withstand voltage	1000 VAC for 1 min. between lead wires and body		
	Insulation resistance	50 MΩ or more (at 500 VDC) between lead wires and body		
Temperature characteristics		In a temperature range of 0 to 50°C, ±2% F.S. or less of pressure measured at 25°C		
Port size		01: R 1/8, M5 WF1:G 1/8 C4: With ø4 One-touch fitting, C6: With ø6 One-touch fitting, M5: M5 female threads		
Lead wire		5-wire oil resistant heavy-duty cord (0.15 mm²)		
Weight		01 approx. 60 g, C4/C6/M5 types approx. 92 g (Each including 0.6 m lead wires)		

Note 1) For ZSE40 (F)/ISE40-□-$^{22}_{32}$
Note 2) For ZSE40 (F)/ISE40-□-$^{30}_{70}$
Note 3) For ZSE40F (compound pressure) with "psi" indication, this is 0.03 to 0.04 psi.
Note 4) For ZSE40F (compound pressure) with "psi" indication, zero clear is in the range of ±0.01 psi.

Note)
When equipped with auto shift function, the following ranges can be set.

Set pressure range	Setting range
–100.0 to 100.0 kPa	–100.0 to 100.0 kPa
10.0 to –101.3 kPa	–101.3 to 101.3 kPa
– 0.1 to 1.000 MPa	–1.000 to 1.000 MPa

Function list

Anti-chattering: Adjusts the response time to prevent momentary fluctuations in the pressure altering the output state.

Key lock: The buttons can be locked to prevent unintentional adjustment.
Peak hold: The maximum value seen by the unit can be retained on the display.
Bottom hold:The minimum value seen by the unit can be retained on the display.
Zero function: The display value can be adjusted back to zero with pressure removed.
Unit conversion:The display unit can be selected to suit user preference.

FOR MORE DETAILS
SEE OUR SPECIFIC CATALOGUES,
PRODUCTS CD's OR ONLINE INFORMATION

Dimensions

ZSE40(F)/ISE40-01

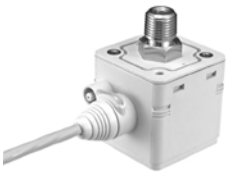

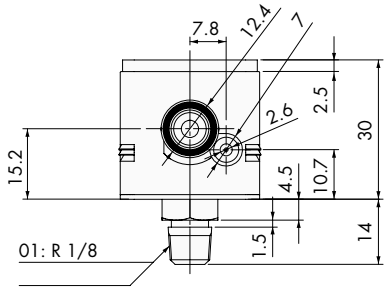

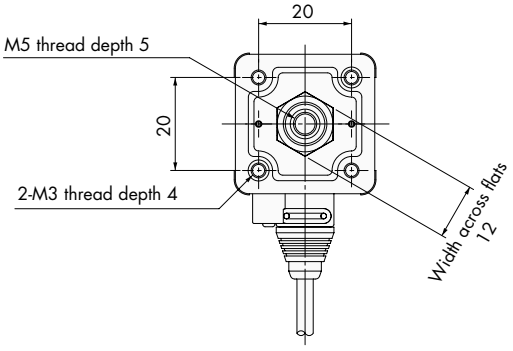

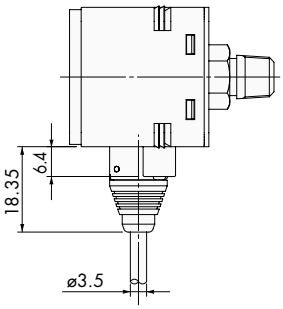

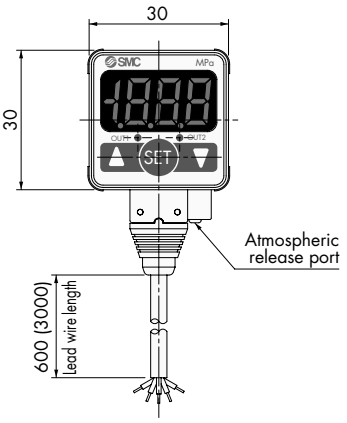

* For splash proof use (IP65), insert an air tube into the atmospheric release port.

ZSE40(F)/ISE40-WF1



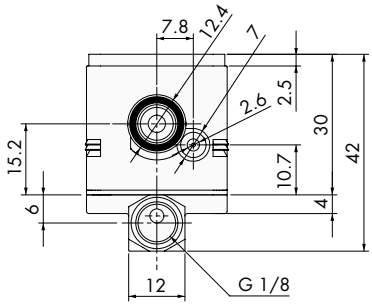

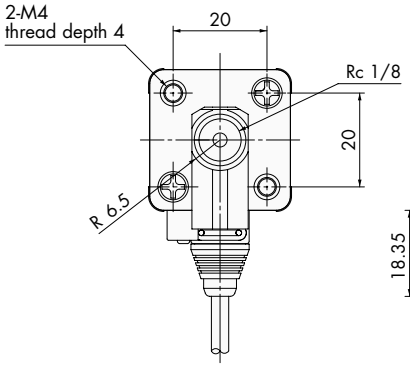

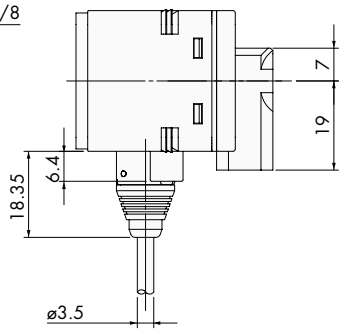

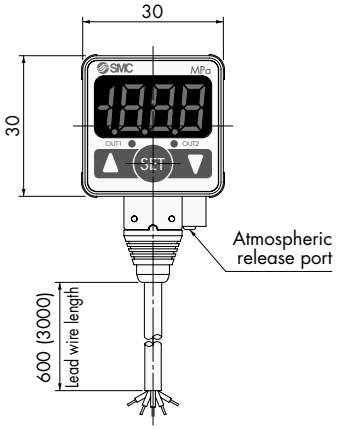

* For splash proof use (IP65), insert an air tube into the atmospheric release port.

Dimensions

ZSE40(F)/ISE40– C4 C6 M5



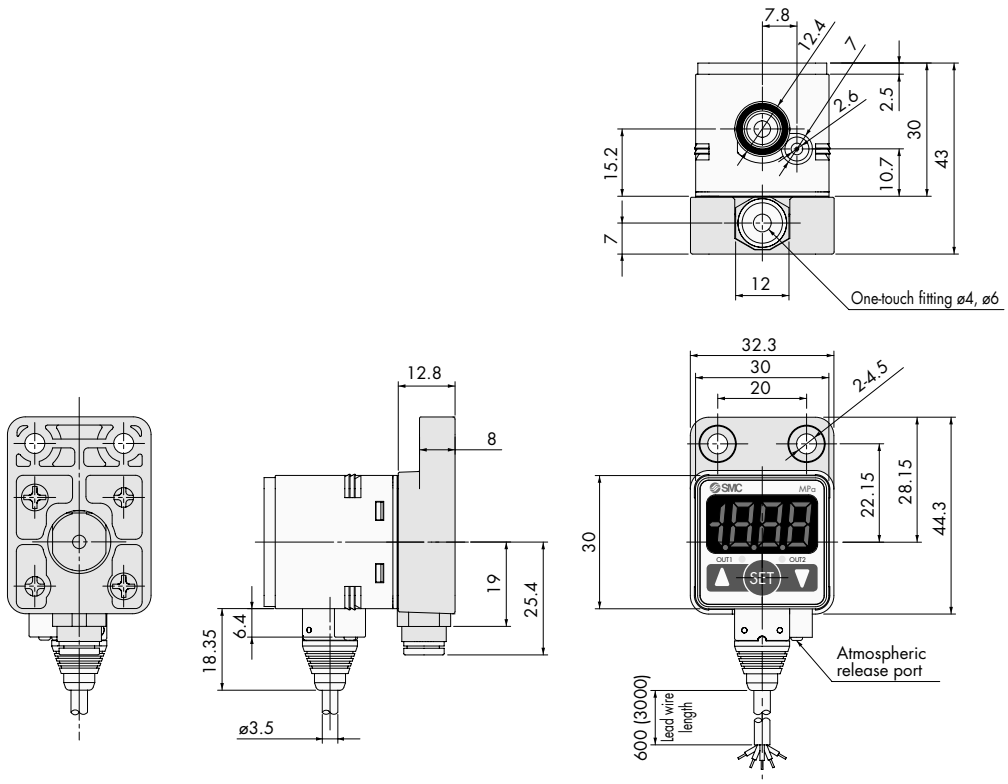

∗ For splash proof use (IP65), insert an air tube into the atmospheric release port.

For–M5

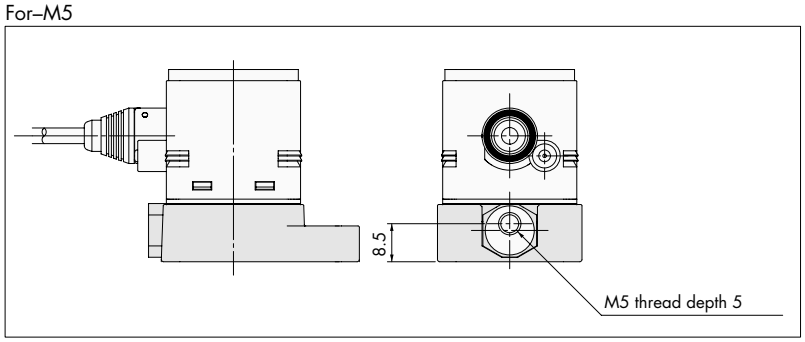

2-colour Display Digital Pressure Switch/For Air

Series ISE70



Features

- *Integrated pressure switch for air.*
- *Robust metal case construction.*
- *IP67 waterproof design.*
- *Removable cable.*
- *Red / Green dual colour display.*
- *NPN and PNP outputs available.*
- *Can be operated in hysteresis or window comparison mode.*
- *Mounting bracket available.*

How to Order

ISE70 – F02 – 43 – S

Piping
G1/4 (ISO1179)

Output

43	Fixed setting: NPN open collector 1 output (Pin no. 4) + PNP open collector 1 output (Pin no. 2)
65	PNP open collector 1 output (Pin no. 4)

Option 1

S	Lead wire with M12 connector (5m), straight
L	Lead wire with M12 connector (5m), right-angled



Connector Pin Assignments

Output -43

1	Brown	DC (+)
2	White	OUT1 (PNP)
3	Blue	DC (–)
4	Black	OUT1 (NPN)

Output -65

1	Brown	DC (+)
2	White	NC
3	Blue	DC (–)
4	Black	OUT1 (PNP)

Accessories

When option parts are required separately, use the following part numbers to place an order.

Option	Part No.	Note
Bracket	ZS-31-A	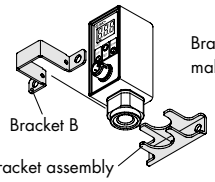 Bracket B and the bracket assembly make up one set. Note: Mounting screws are not included.
Lead wire with M12 connector, straight (spare)	ZS-31-B	Lead wire length: 5m
Lead wire with M12 connector, right-angled (spare)	ZS-31-C	Lead wire length: 5m

Specifications

		ISE70
Rated pressure range		0 to 1MPa
Set pressure range		–0.1 to 1MPa
Proof pressure		1.5MPa
Set pressure resolution		0.01MPa
Fluid		Air, Inert gas, Non-flammable gas
Power supply voltage		12 to 24 VDC, Ripple (p-p) 10% or less (with power supply polarity protection)
Current consumption		55 mA or less (at no load)
Switch output		Output -43: Fixed setting; NPN open collector 1 output (Pin no. 4) + PNP open collector 1 output (Pin no. 2) Note 1) Output -65: PNP open collector 1 output (Pin no. 4) Note 1)
	Max. load current	80 mA
	Max. applied voltage	30 V (with NPN output)
	Residual voltage	1 V or less (with load current of 80 mA)
	Response time	2.5 ms (Response time selections with anti-chattering function: 20 ms, 160 ms, 640 ms, 1000 ms, 2000 ms)
	Short circuit protection	With short circuit protection
Repeatability		±0.5%F.S.
Hysteresis	Hysteresis mode	Adjustable (can be set from 0)
	Window comparator mode	
Display		3 digit, 7-segment indicator, 2-colour display (red and green) can be interlocked with the switch output, Sampling cycle: 5 times/s
Display accuracy		±2%F.S. ±1 digit or less (at 25 C ±3 °C)
Indication light		Light up when output is ON (Green)
Functions		Anti-chattering function, Unit display switching function, Zero out function, Key lock function
Environ-mental resistance	Enclosure	IP67
	Fluid temperature range	0 to 50°C (with no freezing or condensation)
	Operating temperature range	Operating: 0 to 50°C, Stored: –10 to 60°C (with no freezing or condensation)
	Operating humidity range	Operating and stored: 35 to 85%RH (with no condensation)
	Withstand voltage	1000 VAC for 1 min. between live parts and enclosure
	Insulation resistance	50 MΩ or more between live parts and enclosure (at 500 VDC Mega)
Temperature characteristics (Based on 25°C: Operating temperature range)		±2%F.S. or less
Standard		Compliant with CE Marking and UL/CSA (UL508) standards
Wetted material		Fitting: C3602 (electroless nickel plated), Sensor port: PBT, Sensor pressure receiving area: silicon, O-ring: NBR
Port size		F02: G1/4 (ISO1179) Note 2)
Lead wire		Lead wire with M12 4-pin pre-wired connector (5 m)
Mass (Weight)		190 g (excluding the lead wire with M12 4-pin pre-wired connector)

Note 1) The NPN and PNP outputs function for a single set point.
Note 2) G1/4: Applicable to ISO1179-1

Dimensions

The dimensions for ISE70 are common to ISE75 and ISE75H. Please see under ISE75 (following pages) for dimensions.

2-colour Display Digital Pressure Switch For General Fluids

Series ISE75/75H

Features

- *Integrated pressure switch for air or fluids.*
- *All wetted parts stainless steel.*
- *Robust metal case construction.*
- *IP67 waterproof construction.*
- *Maximum operating pressure 10 Mpa or 15 MPa.*
- *Removable cable.*
- *Red / Green dual colour display.*
- *NPN and PNP outputs available.*
- *Can be operated in hysteresis or window comparison mode.*
- *Mounting bracket available.*



ISE75 (10MPa)



ISE75H (15MPa)

How to Order

10MPa ISE75 —F02— 43 — S

15MPa ISE75H—F02— 43 — S



Connector Pin Assignments

Output -43

1	Brown	DC (+)
2	White	OUT1 (PNP)
3	Blue	DC (–)
4	Black	OUT1 (NPN)

Output -65

1	Brown	DC (+)
2	White	NC
3	Blue	DC (–)
4	Black	OUT1 (PNP)

Piping

F02	G1/4 (ISO1179) Note 1)

Note 1) G1/4: Applicable to ISO1179-

Output

43	Fixed setting: NPN open collector 1 output (Pin no. 4) + PNP open collector 1 output (Pin no. 2)
65	PNP open collector 1 output (Pin no. 4)

Option 1

S	Lead wire with M12 connector (5m), straight
L	Lead wire with M12 connector (5m), right-angled

Optional Part No.

When option parts are required separately, use the following part numbers to place an order.

Option	Part No.	Note
Bracket	ZS-31-A	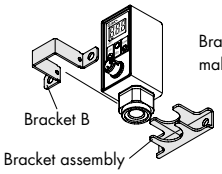 Bracket B and the bracket assembly make up one set.
Lead wire with M12 connector, straight (spare)	ZS-31-B	Lead wire length: 5m
Lead wire with M12 connector, right-angled (spare)	ZS-31-C	Lead wire length: 5m

Specifications

		ISE75	ISE75H
Rated pressure range		0 to 10MPa	0 to 15MPa
Set pressure range		0.4 to 10MPa	0.5 to 15MPa
Proof pressure		30MPa	45MPa
Set pressure resolution		0.1MPa	
Fluid		Fluid that will not corrode stainless steel SUS430 and SUS630	
Power supply voltage		12 to 24 VDC, Ripple (p-p) 10% or less (with power supply polarity protection)	
Current consumption		55 mA or less (at no load)	
Switch output		Output -43: Fixed setting; NPN open collector 1 output (Pin no. 4) + PNP open collector 1 output (Pin no. 2) Note 1) Output -65: PNP open collector 1 output (Pin no. 4) Note 1)	
	Max. load current	80 mA	
	Max. applied voltage	30 V (with NPN output)	
	Residual voltage	1 V or less (with load current of 80 mA)	
	Response time	2.5 ms (Response time selections with anti-chattering function: 20 ms, 160 ms, 640 ms, 1000 ms, 2000 ms)	
	Short circuit protection	With short circuit protection	
Repeatability		±0.5%F.S.	
Hysteresis	Hysteresis mode	Adjustable (can be set from 0)	
	Window comparator mode		
Display		3 digit, 7-segment indicator, 2-colour display (red and green) can be interlocked with the switch output, Sampling cycle: 5 times/s	
Display accuracy		±2%F.S. ±1 digit or less (at 25 C ±3 °C)	
Indication light		Light up when output is ON (Green)	
Functions		Anti-chattering function, Unit display switching function, Zero out function, Key lock function	
Environ-mental resistance	Enclosure	IP67	
	Fluid temperature range	–5 to 80° C (with no freezing or condensation)	
	Operating temperature range	Operating: –5 to 50°C, Stored: –10 to 60°C (with no freezing or condensation)	
	Operating humidity range	Operating and stored: 35 to 85%RH (with no condensation)	
	Withstand voltage	250 VAC for 1 min. between live parts and enclosure	
	Insulation resistance	50 MΩ or more between live parts and enclosure (at 50 VDC Mega)	
Temperature characteristics (Based on 25°C: Operating temperature range)		±3%F.S. or less	
Standard		Compliant with CE Marking and UL/CSA (UL508) standards	
Wetted material		Pressure receiving area: Stainless steel SUS630, Fittings: Stainless steel SUS430	
Port size		F02: G1/4 (ISO1179) Note 2)	
Lead wire		Lead wire with M12 4-pin pre-wired connector (5 m)	
Mass (Weight)		210 g (excluding the lead wire with M12 4-pin pre-wired connector)	

Note 1) The NPN and PNP outputs function for a single setpoint.
Note 2) G1/4: Applicable to ISO1179-1

Dimensions

ISE70/75/75H

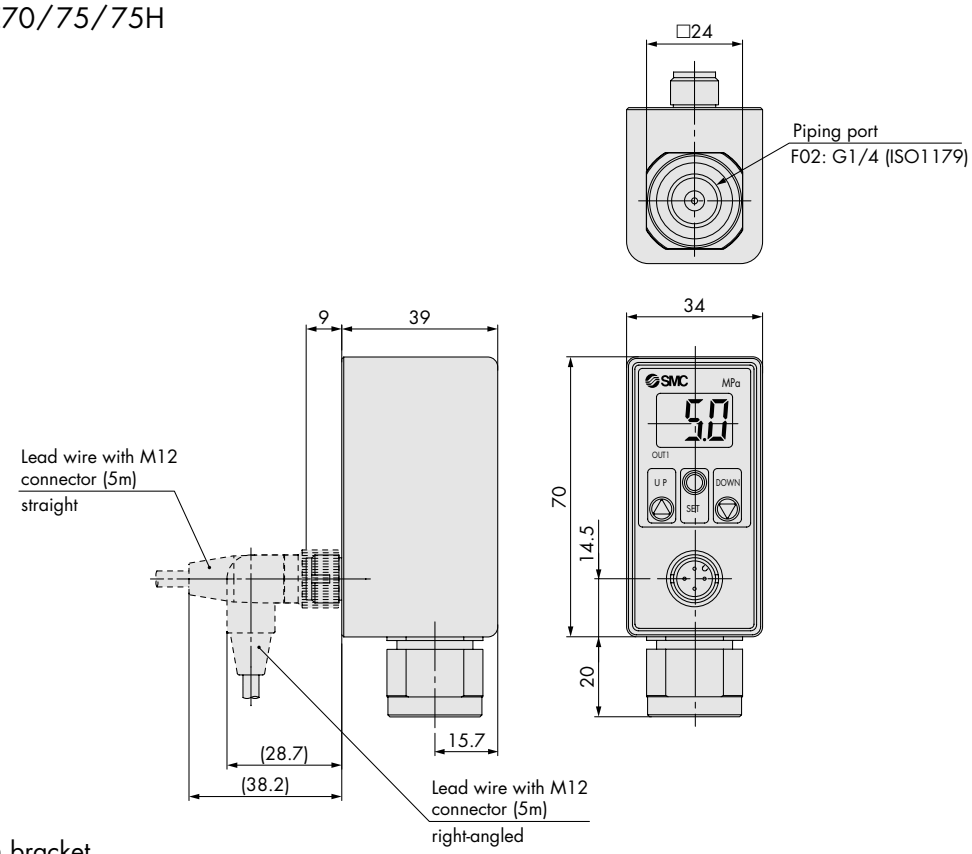

With bracket

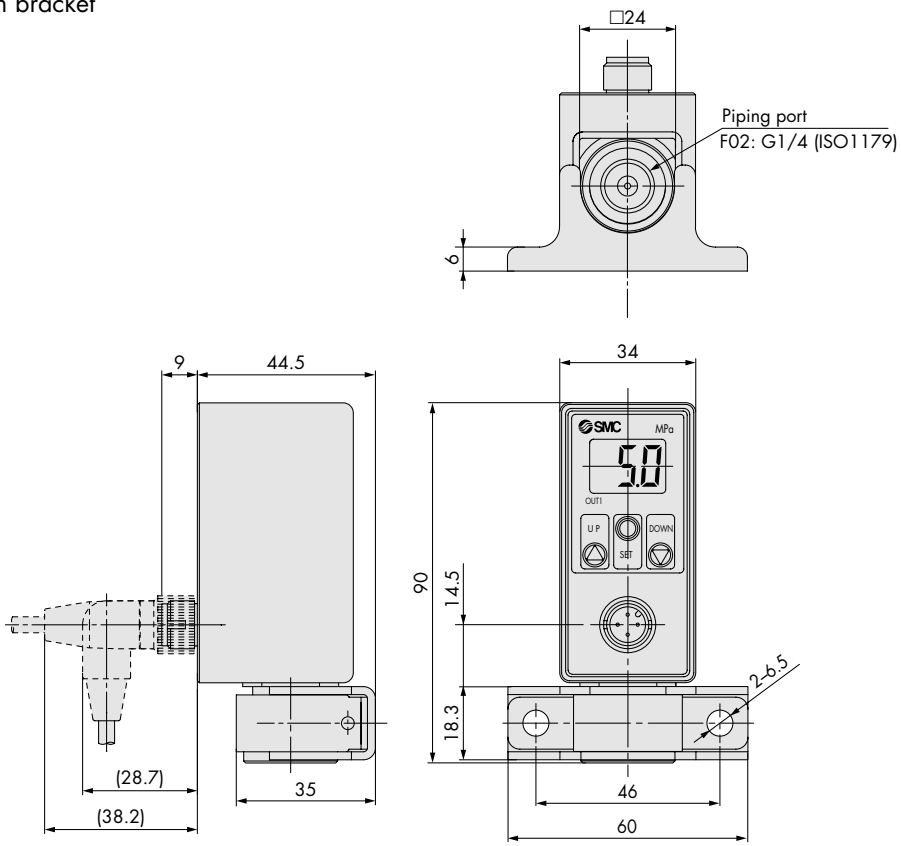

Two colour display, Digital Pressure Switch For Fluids

Series ZSE80/ISE80

CE RoHS

Features



- *Stainless steel construction. Make ZSE/ISE80 suitable for working with a wide range of fluids, even aggresive*
- *Four pressure ranges available working in the following regimes:*
  - *Vacuum: from -0.1 to 0MPa*
  - *Compound: from -0.1 to +0.1 MPa*
  - *Positive: from -0.1 to +1 MPa and from -0.1 to +2 MPa.*
- *2 -colour display (LCD)*
- *Low leakage versions available.*
- *Simplied operation.*
- *Rear and bottom piping available as standard options.*
- *Analogue current output option added.*
- *Water hammer protection construction.*

How to Order

For positive pressure: **ISE 80 – 02 – N**

For vacuum/ compound pressure: **ZSE 80 – 02 – N**

Rated pressure range

80	–0.1 to 1 MPa
80H	–0.1 to 2 MPa

Rated pressure range

80	0 to –101 kPa
80F	–100 to 100 kPa

Piping

02	R1/4 (M5 female threaded)	Rear ported
N02	NPT1/4 (M5 female threaded)	
F02	G1/4 (M5 female threaded)	
C01	Rc1/8	
A2	URJ1/4	
B2	TSJ1/4	
02L	R1/4 (M5 female threaded)	Bottom ported
N02L	NPT1/4 (M5 female threaded)	
C01L	Rc1/8	
A2L	URJ1/4	
B2L	TSJ1/4	

Input/Output

N	NPN open collector 1 output
P	PNP open collector 1 output
A	NPN open collector 2 outputs
B	PNP open collector 2 outputs
R	NPN open collector 2 outputs + Analogue voltage output/Auto-shift switching
T	PNP open collector 2 outputs + Analogue voltage output/Auto-shift switching
S	NPN open collector 2 outputs + Analogue current output/Auto-shift switching
V	PNP open collector 2 outputs + Analogue current output/Auto-shift switching

Accessories

None

With bracket

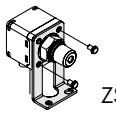

ZS-24-A

Rear ported

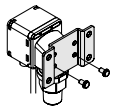

ZS-35-A

Bottom ported

With bracket Note)

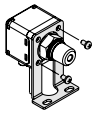

ZS-24-D

Panel mount

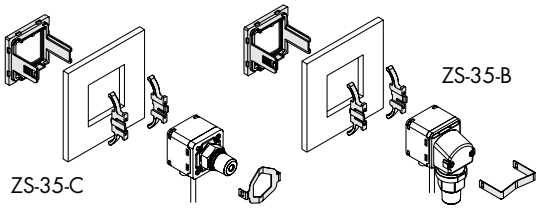

ZS-35-B

ZS-35-C

Rear ported

Bottom ported

Panel mount + Front protection cover

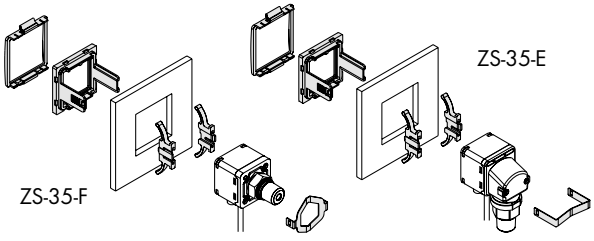

ZS-35-E

ZS-35-F

Rear ported

Bottom ported

Note) Rear ported only

Sensors, Switches

FOR MORE DETAILS
SEE OUR SPECIFIC CATALOGUES,
PRODUCTS CD's OR ONLINE INFORMATION

Specifications

Model			ZSE80 (Vacuum pressure)	ZSE80F (Compound pressure)	ISE80 (Positive pressure)	ISE80H (Positive pressure)
Rated pressure range			0.0 to –101.0 kPa	–100.0 to 100.0 kPa	–0.100 to 1.000 MPa	–0.100 to 2.00 MPa
Set pressure range			10.0 to –111.0 kPa	–110.0 to 110.0 kPa	–0.105 to 1.100 MPa	–0.105 to 2.20 MPa
Withstand pressure			500 kPa		2 MPa	4 MPa
Wetted parts material			Pressure sensor: Stainless steel 630, Fitting: Stainless steel 304			
Applicable fluid			Fluids do not corrode stainless steel 630 and 304			
Port size			R1/4, NPT1/4, G1/4*, URJ1/4, TSJ1/4, Rc1/8 Piping direction: Rear/Bottom			
Power supply voltage			12 to 24 VDC ±10%, Ripple (p-p) 10% or less (with power supply polarity protection)			
Current consumption			45 mA or less			
Switch output			NPN 1 output, NPN 2 outputs, PNP 1 output, PNP 2 outputs			
	Maximum load current		80 mA			
	Maximum load voltage		28 V (at NPN output)			
	Residual voltage		1 V or less (with load current of 80 mA)			
	Response time		2.5 ms (with anti-chattering function: 20, 100, 500, 1000, 2000 ms)			
	Short circuit protection		Yes			
Repeatability			±0.2% F.S. ±1 digit			
Hysteresis	Hysteresis mode		Variable (0 or above)			
	Window comparator mode					
Analogue output	Voltage output	Output voltage (Rated pressure range)	1 to 5 V ±2.5% F.S.		0.6 to 5 V ±2.5% F.S.	0.8 to 5 V ±2.5% F.S.
		Linearity	±1% F.S. or less			
		Output impedance	Approx. 1 kΩ			
	Current output	Output current (Rated pressure range)	4 to 20 mA ±2.5% F.S.		2.4 to 20 mA ±2.5% F.S.	3.2 to 20 mA ±2.5% F.S.
		Linearity	±1% F.S. or less			
		Load impedance	Maximum load impedance: 300 Ω (Power supply voltage 12 V) 600 Ω (Power supply voltage 24 V) Minimum load impedance: 50 Ω			
Auto-shift input			Non-voltage input (Reed or Solid state), Low level: 0.4 V or less, 5 ms or longer input			
Display			3 1/2-digit, 7-segment, 2-color LCD (Red/Green)			
Display accuracy			±2% F.S. ±1 digit (Ambient temperature of 25 ±3°C)			
Indicator light			Lights up when output is turned ON. OUT1, OUT2: Orange			
Function			Anti-chattering, Zero-out, Key lock function, Auto-preset, Auto-shift, Unit display switching, Power-saving mode			
Environmental resistance	Enclosure		IP65			
	Operating temperature range		Operating: 0 to 50°C, Stored: –10 to 60°C (No freezing or condensation)			
	Operating humidity range		Operating/Stored: 35 to 85% RH (No condensation)			
	Withstand voltage		250 VAC for 1 minute between live parts and case			
	Insulation resistance		2 MΩ or more between live parts and case (at 50 VDC Mega)			
	Vibration resistance		10 to 150 Hz if amplitude smaller than 15 mm or acceleration lower than 20 m/s², in X, Y, Z directions, for 2 hours each (De-energised)			
	Impact resistance		100 m/s² in X, Y, Z directions, 3 times each (De-energised)			
Temperature characteristics			±3% F.S. (Based on 25°C, within operating temperature range)			
Lead wire			Oilproof heavy-duty vinyl cable, 3 cores (N.P) 4 cores (A.B) 5 cores (R.T.S.V) ø3.5, 2 m Conductor area: 0.15 mm² (AWG26) Insulator O.D.: 0.95 mm			
Standards			CE marking, UL/CSA, RoHS compliance			

* G1/4 is available for rear ported only.

Piping Specifications

Model	02	N02	F02	C01	A2	B2
Port size	R1/4	NPT1/4	G1/4	Rc1/8	URJ1/4	TSJ1/4
Weight (Bottom ported)	117 g	118 g	—	114 g	120 g	111 g
Weight (Rear ported)	89 g	90 g	86 g	86 g	92 g	83 g
Leakage	1 x 10^{-5} Pa·m³/s				1 x 10^{-10} Pa·m³/s	

Dimensions

ZSE/ISE8□□- 02 N02 F02 C01 A2 B2

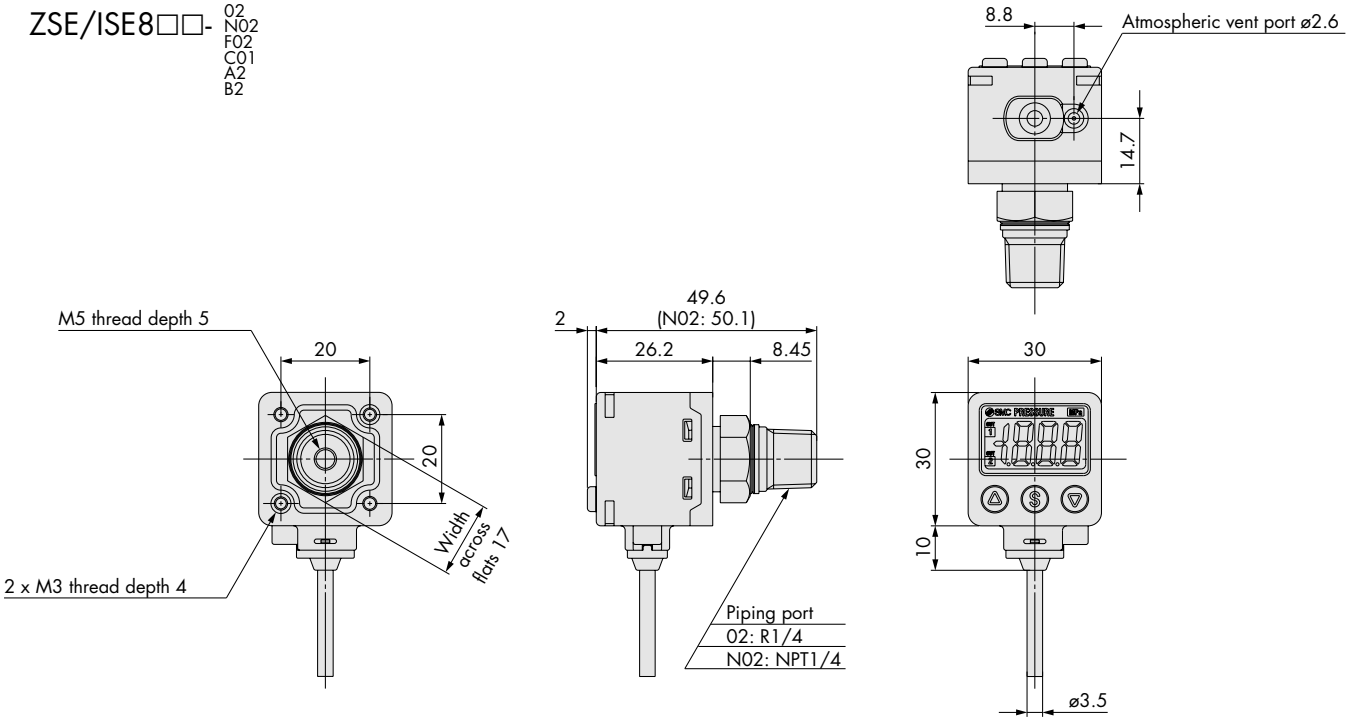

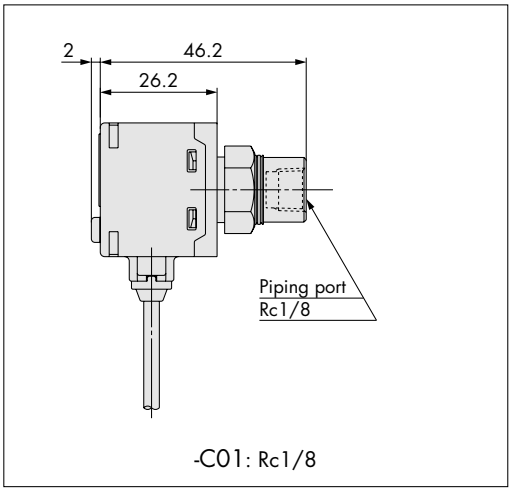

-C01: Rc1/8

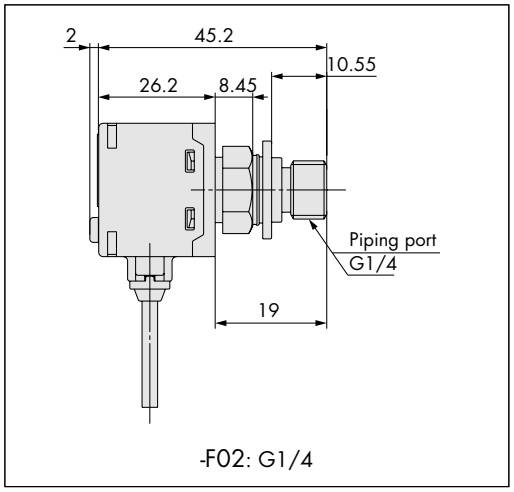

-F02: G1/4

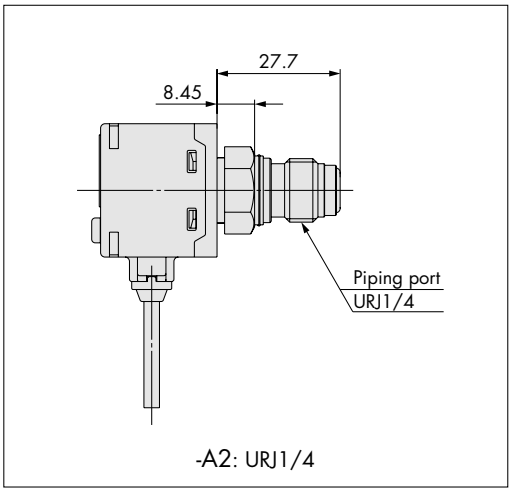

-A2: URJ1/4

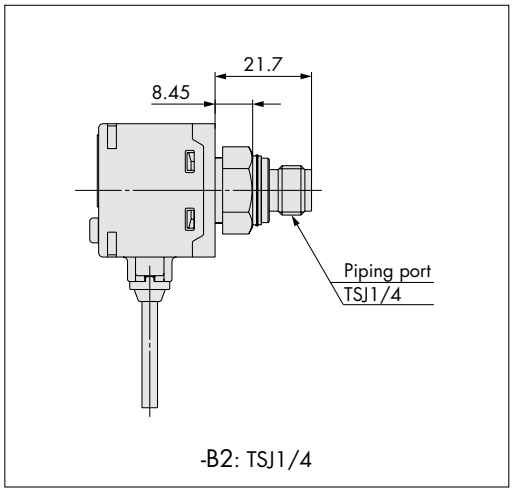

-B2: TSJ1/4

Sensors, Switches

Dimensions

ZSE/ISE8□□- 02L / N02L / C01L / A2L / B2L

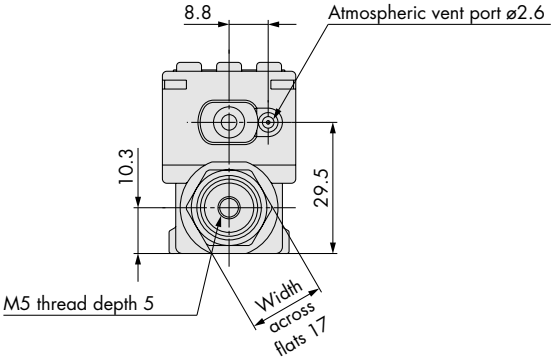

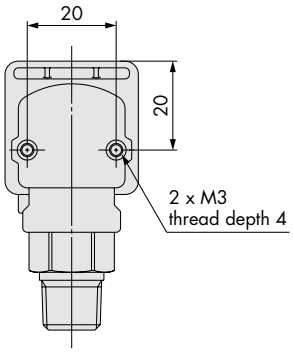

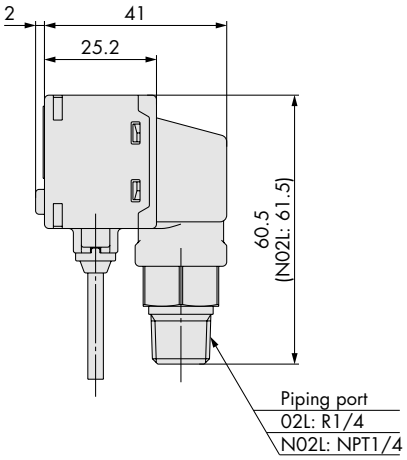

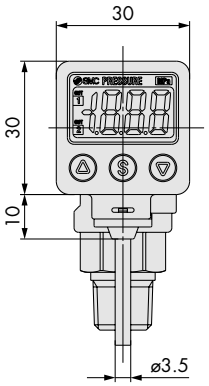

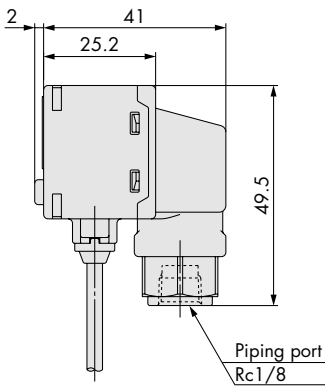

-C01L: Rc1/8

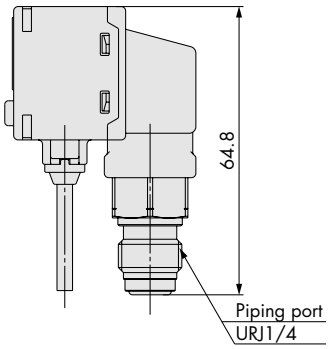

-A2L: URJ1/4

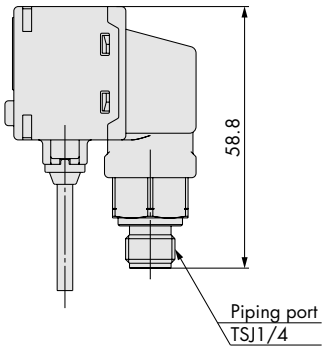

-B2L: TSJ1/4

Dimensions

With bracket (Rear ported)

• ZS-24-A

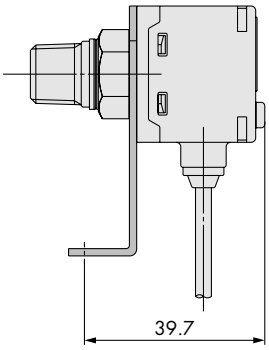

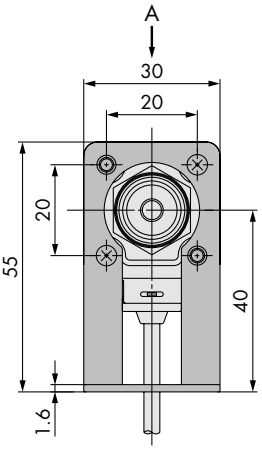

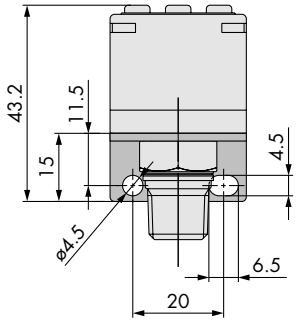

View A

With bracket (Rear ported)

• ZS-24-D

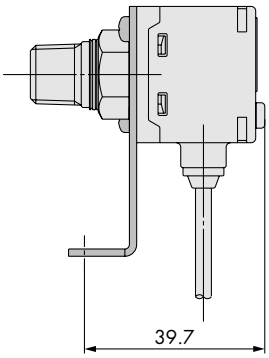

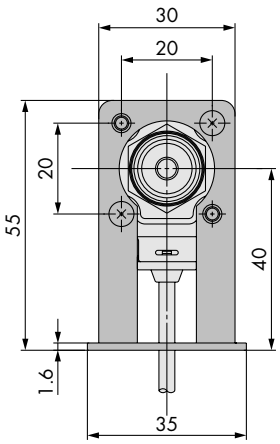

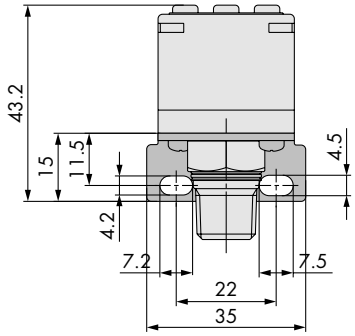

With bracket (Bottom ported)

• ZS-35-A

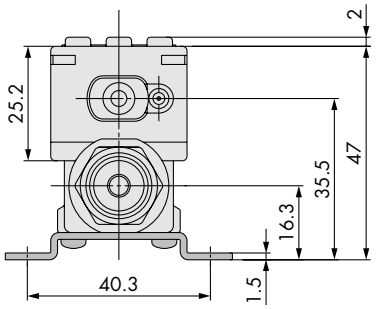

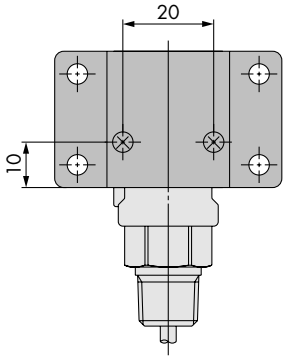

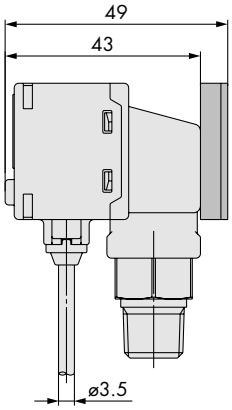

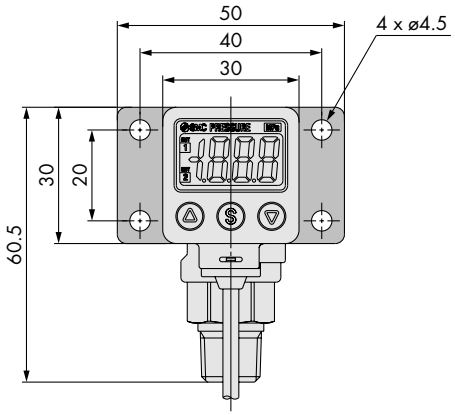

Dimensions

Panel mount (Rear ported)

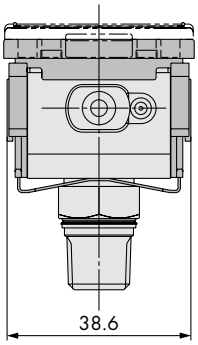

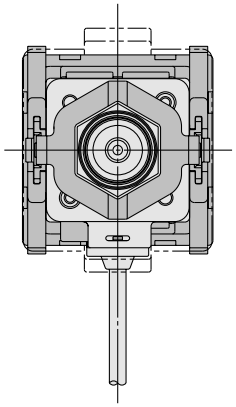

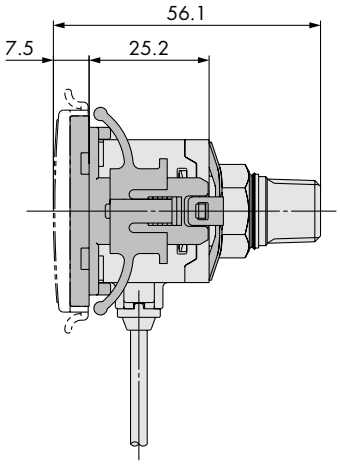

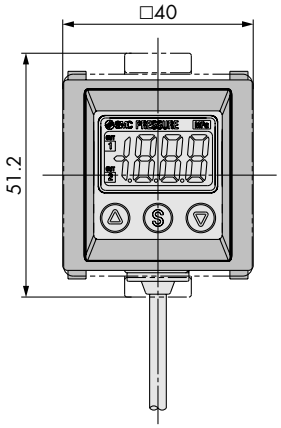

Panel-cut dimensions

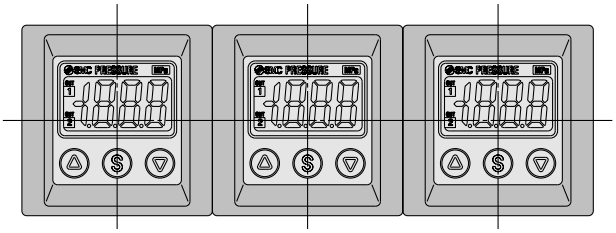

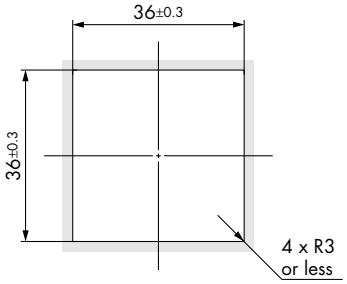

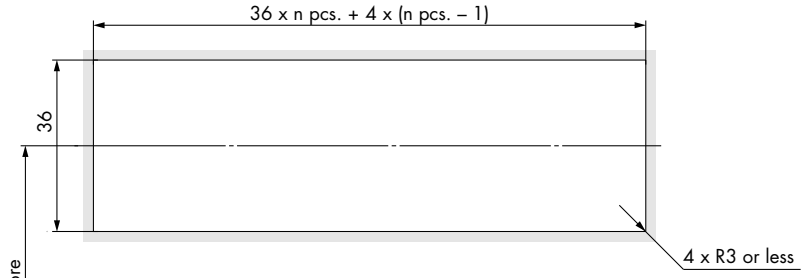

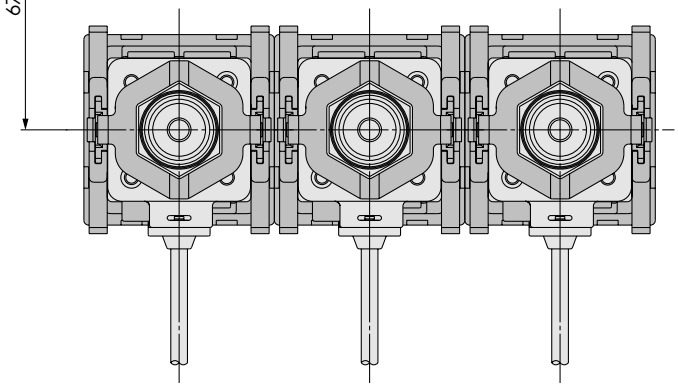

Dimensions

Panel mount (Bottom ported)

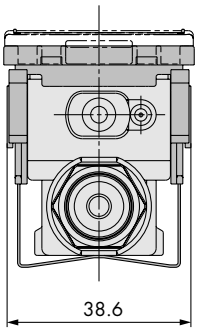

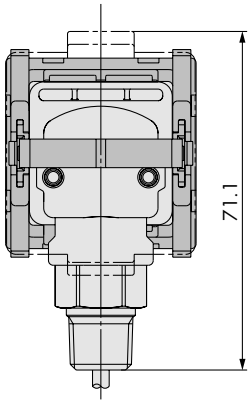

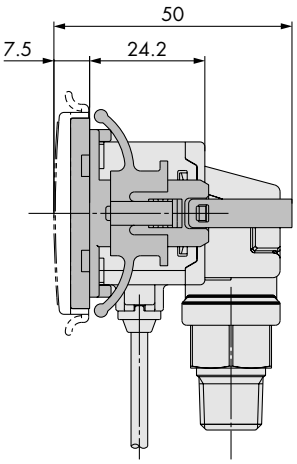

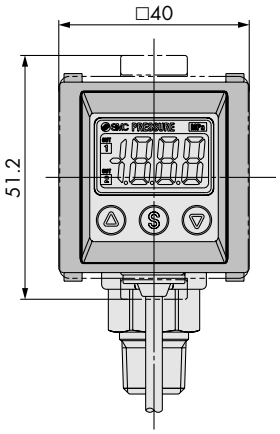

Panel-cut dimensions

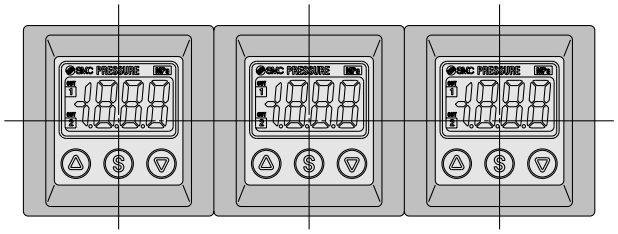

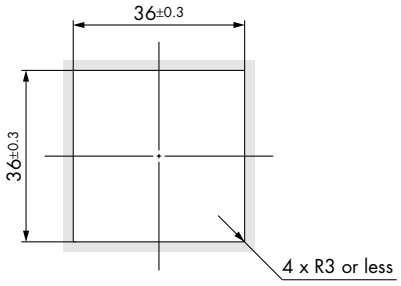

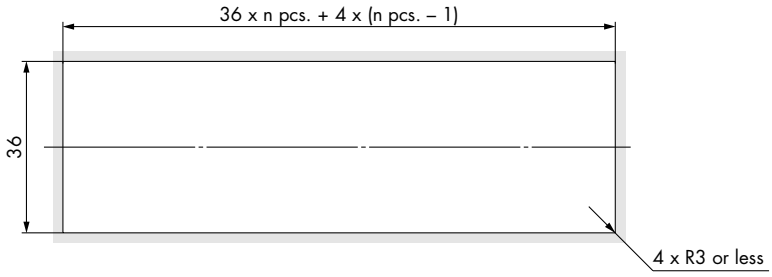

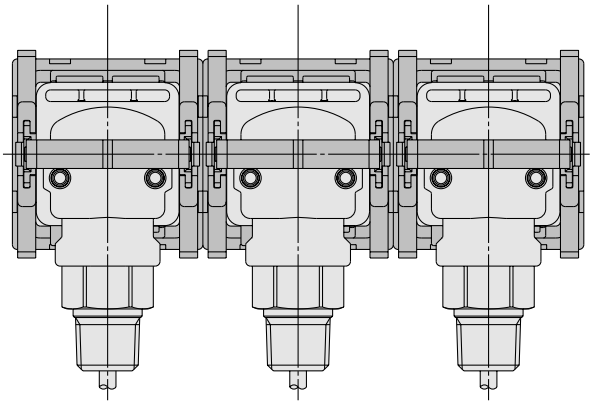

Pressure Sensor for Air

Series PSE530

Features

- *Remote sensor for air or inert gas*
- *1-5 volt analogue output*
- *4 different models to suit pressure or vacuum*
- *Stainless steel case*
- *Removable cable for easy installation*
- *M5 connection port*
- *Compact design*



How to Order

PSE53 0 — M5 — L

Pressure sensing range

0	Normal pressure [0 to 1 MPa]
1	Vacuum [0 to –101 kPa]
2	Low pressure [0 to 101 kPa]
3	Compound pressure [–101 to 101 kPa]

Port size

M5	M5
R06	ø6 plug in stem

Option

L	Sensor cable (3 m) Without connector
C2L	Sensor cable (3 m) + Connector (1 pc.) Connector

Note) At the factory, the connector is not connected to the cable, but packed together with it for shipment.

Specifications

Model		PSE530-M5	PSE531-M5	PSE532-M5	PSE533-M5
Rated pressure range		0 to 1 MPa	0 to –101 kPa	0 to 101 kPa	–101 to 101 kPa
Proof pressure		1.5 MPa	500kPa		
Fluid		Air/Non-corrosive gas			
Power supply voltage		12 to 24 VDC (Ripple ±10% or less)			
Current consumption		15 mA or less			
Output specification		Analog output (1 to 5 V, Output impedance: Approx. 1 k)			
Accuracy		±2% F.S. or less (Within rated pressure range, Ambient temperature 25 ±3 °C)			
Linearity		±1% F.S. or less			
Repeatability		±1% F.S. or less			
Power supply voltage effect		±1% F.S. or less based on the analog output at 18 V ranging from 12 to 24 VDC			
Resistance	Enclosure	IP40			
	Temperature range	0 to 50°C; Stored: –10 to 70° C (No freezing or condensation)			
Temperature characteristics (Based on 25°C)		±2% F.S. or less based on the analog output value at 25°C from a range of 0 to 50°C			
Port size		M5, R06 Plug in			
Material		Body: Stainless steel Grade 303, Internal enclosure: PPE; Pressure sensor: Silicon; O-ring: NBR			
Sensor cable/Option		Halogen-free heavy-duty cord, ø2.7, 0.15 mm², 3 cores, 3 m			

Accessories

When only optional parts are required, order using the part numbers listed below.

Description	Part no.	Note
Connector	ZS-28-C	e-con Connector
Sensor cable	ZS-26-F	Cable length: 3 m
Connector + Sensor cable	ZS-26-J	Cable length: 3 m The connector is not connected to the cable at the time of shipment.

Dimensions

PSE53□-M5

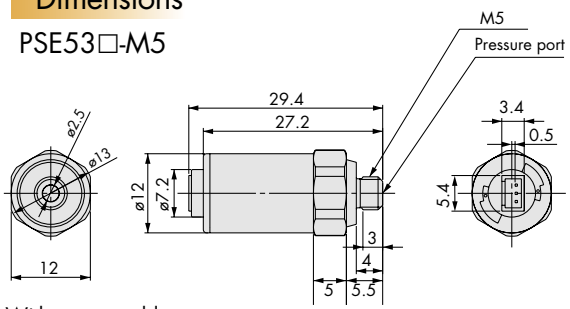

With sensor cable

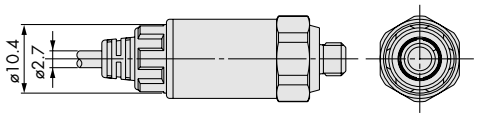

Dimensions

R06 Plug-in type

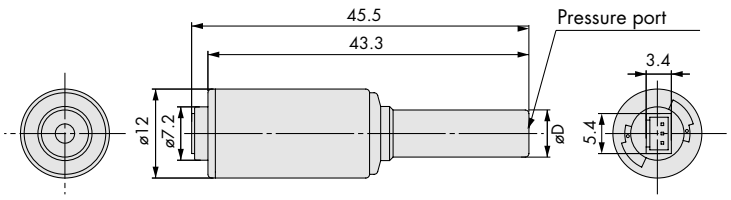

Sensors, Switches

Compact Pressure Sensor For Air

Series PSE540

Features



- *Miniature sensor for dry air and vacuum*
- *Several different porting options*
- *Different pressure ranges available*
- *1 to 5v analogue output*
- *Can be ordered with connector for SMC display unit*
- *Ultra compact and light weight*

How to Order

Pressure sensing range

0	Positive pressure (0-1MPa)
1	Vacuum (0 to –101 kPa)
3	Compound pressure (–100 to 100 kPa)

Increased Accuracy

Nil	±2% FS
A	±1% FS

Option (Connector)

Nil	C2
Without	Connector for PSE200 or PSE300 display controllers 1 pc. 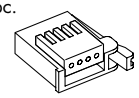

PSE54 1 □ –M3–C2

Note) At the factory, the connector is not connected to the cable, but packed together with it for shipment.

Port size

M3	M3	
M5	M5	
01	R 1/8 (With M5 female thread)	
R04	ø4 plug-in reducer	
R06	ø6 plug-in reducer	

IM5	M5 female thread, through type	
IM5H	M5 female thread, through type (With mounting hole)	

Accessories

Description	Part no.	Note
Connector for PSE200/300	ZS-28-C	1 pc.

Specifications

Conforms to CE marking and UL (CSA) standards.

Model		PSE540	PSE541	PSE543
Rated pressure range		0 - 1MPa	0 to –101 kPa	–100 to 100 kPa
Proof pressure		1.5MPa	500 kPa	
Fluid		Air, No-corrosive gas, Non-flammable gas		
Power supply voltage		12 to 24 VDC ±10%, Ripple (p-p) 10% or less (With power supply polarity protection)		
Current consumption		15 mA or less		
Output specification		Analog output 1 to 5 V (Within rated pressure range), Output impedance: Approx. 1 kΩ		
Accuracy (Ambient temperature of 25°C)		±2% F.S. or less (PSE54□A= ±1% F.S.)		
Linearity		±0.7% FS	±0.4% F.S. or less	
Repeatability		±0.2% F.S. or less		
Power supply voltage effect		±0.8% F.S. or less		
Resistance	Enclosure	IP40		
	Operating temperature range	Operating: 0° to 50°C, Stored: –20° to 70°C (No condensation or freezing)		
	Operating humidity range	Operating/Stored: 35 to 85% RH (No condensation)		
	Withstand voltage	1000 VAC, 50/60 Hz for 1 minute between live parts and case		
	Insulation resistance	50 MΩ between live parts and case (at 500 VDC)		
Temperature characteristics		±2% F.S. or less (based on 25°C)		

Piping Specifications

Model		M3	M5	01	R04	R06	IM5	IM5H
Port size		M3	M5	R1/8 M5	ø4 plug-in reducer	ø6 plug-in reducer	M5 female thread, through type	M5 female thread, through type (with mounting hole)
Material	Case	Resin case: PBT Fitting: Stainless steel 303		Resin case: PBT Fitting: C3604BD	PBT		Resin case: PBT Fitting: A6063S-T5	
	Pressure sensing section	Pressure sensor: Silicon, O-ring: NBR						
Sensor cable		3-wire oval cable (0.15 mm²)						
Weight	With sensor cable	42.4 g	42.7 g	49.3 g	41.4 g	41.6 g	43.3 g	44.1 g
	Without sensor cable	2.9 g	3.2 g	9.8 g	1.9 g	2.1 g	3.8 g	4.6 g

FOR MORE DETAILS
SEE OUR SPECIFIC CATALOGUES,
PRODUCTS CD's OR ONLINE INFORMATION

Dimensions

PSE54□- M3 M5



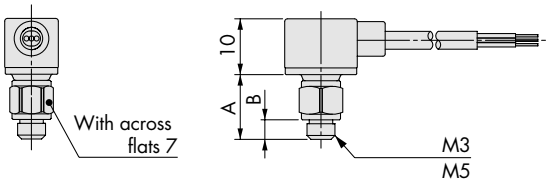

	PSE54□-M3	PSE54□-M5
A	10.8	11.5
B	3	3.5

PSE5□- R04 R06



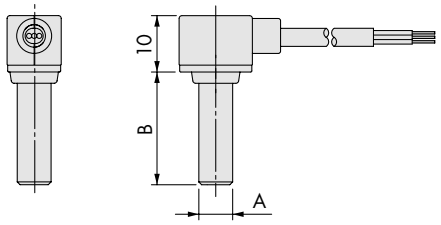

	PSE54□-R04	PSE54□-R06
A	ø4	ø6
B	18	20

Common dimensions

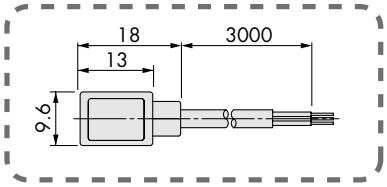

PSE54□-IM5



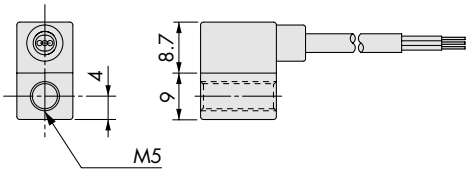

PSE54□-01



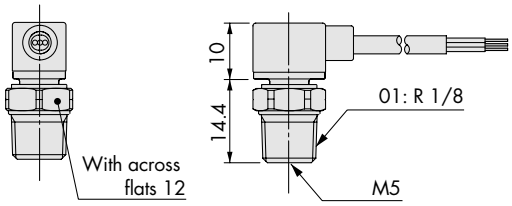

PSE54□-IM5H



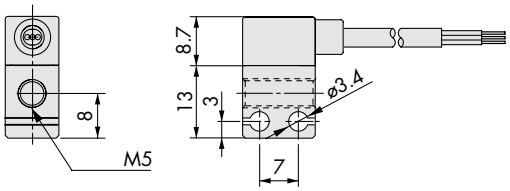

Low Differential Pressure Sensor
Series PSE550

Features



- *Low differential pressure sensor*
- *For air or dry gases*
- *Measures ± 2kPa (0.3 Psi)*
- *1-5v or 4-20mA analogue output options*
- *Direct connection of 4mm ID tubing*
- *Typical applications, filter back pressure monitoring or fan output checking*
- *Mounting bracket available*
- *Integrated indicator light*

How to Order

PSE550— — —

Output specifications

Nil	Voltage output type 1 to 5 V
28	Current output type 4 to 20 mA

Option 2 (Connector)

Nil	None
C2	Connector for PSE300 pressure controller 1 pc. 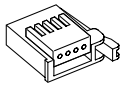

Note 1) Current output type cannot be connected to the Series PSE300.
Note 2) The connector is unassembled in the factory but is included with the shipment.

Accessories

Description	Part no.	Note
Bracket	ZS-30-A	With M3 x 5L (2 pcs.)
Connector for PSE300	ZS-28-C	1 pc.

Specifications

Model		PSE550	PSE550-28
Rated differential pressure range		0 to 2 kPa	
Operating pressure range		–50 to 50 kPa Note)	
Proof pressure		65 kPa	
Applicable fluid		Air/Non-corrosive gas/Non-inflammable gas	
Power supply voltage		12 to 24 VDC ±10%, Ripple (p-p) 10% or less (With power supply polarity protection)	
Current consumption		15 mA or less	—
Output specification		Analogue output 1 to 5 VDC (Within rated differential pressure range) Output impedance: Approx. 1 kΩ	Analogue output 4 to 20 mADC (Within rated differential pressure range) Allowable load impedance: 500 Ω or less (at 24 VDC) 100 Ω or less (at 12 VDC)
Accuracy (Ambient temperature of 25°C)		±1% F.S. or less	
Linearity		±0.5% F.S. or less	
Repeatability		±0.3% F.S. or less	
Indication light		Orange light is on (When energized)	
Environmental resistance	Enclosure	IP40	
	Operating temperature range	Operating: 0 to 50°C, Stored: –20° to 70°C (No freezing or condensation)	
	Operating humidity range	Operating/Stored: 35 to 85% RH (No condensation)	
	Withstand voltage	1000 VAC or more, 50/60 Hz for 1 minute between live parts and case	
	Insulation resistance	50 MΩ or more between live parts and case (at 500 VDC)	
Temperature characteristics		±3% F.S. or less (Based on 25°C)	
Port size		ø4.8 (ø4.4 in the end) resin piping (Applicable to I.D. ø4 air tubing)	
Material of wetted parts		Resin pipe: Nylon, Piston area of sensor: Silicon	
Sensor cable		3-wire oval cable (0.15 mm²)	2-wire oval cable (0.15 mm²)
Weight	With sensor cable	75 g	
	Without sensor cable	35 g	

Note) Can detect differential pressure from 0 to 2 kPa within the range of –50 to 50 kPa.

FOR MORE DETAILS
SEE OUR SPECIFIC CATALOGUES,
PRODUCTS CD's OR ONLINE INFORMATION

Analog Output

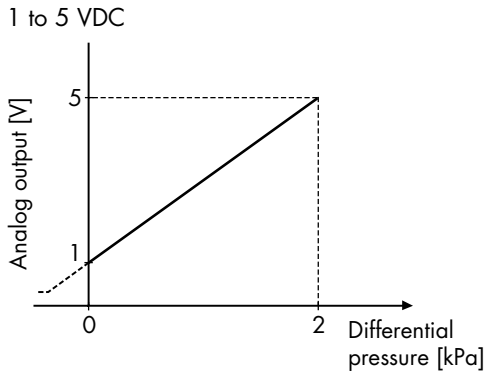

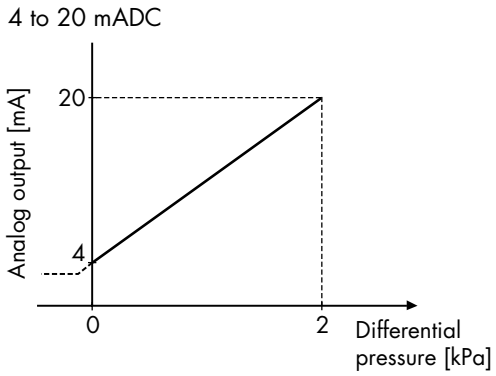

Dimensions

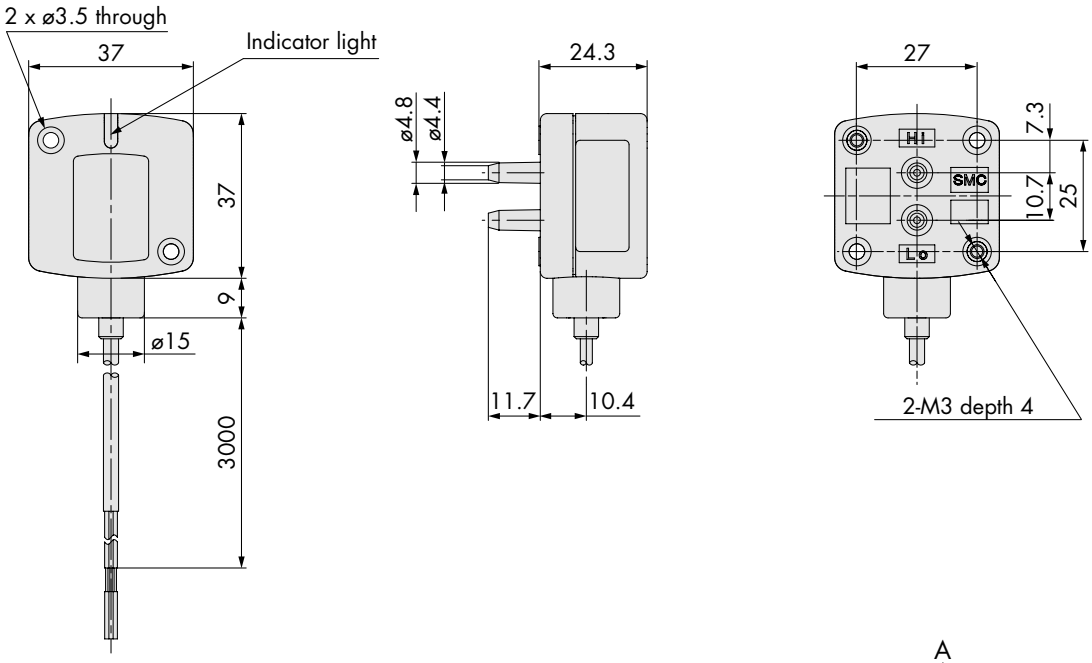

With bracket

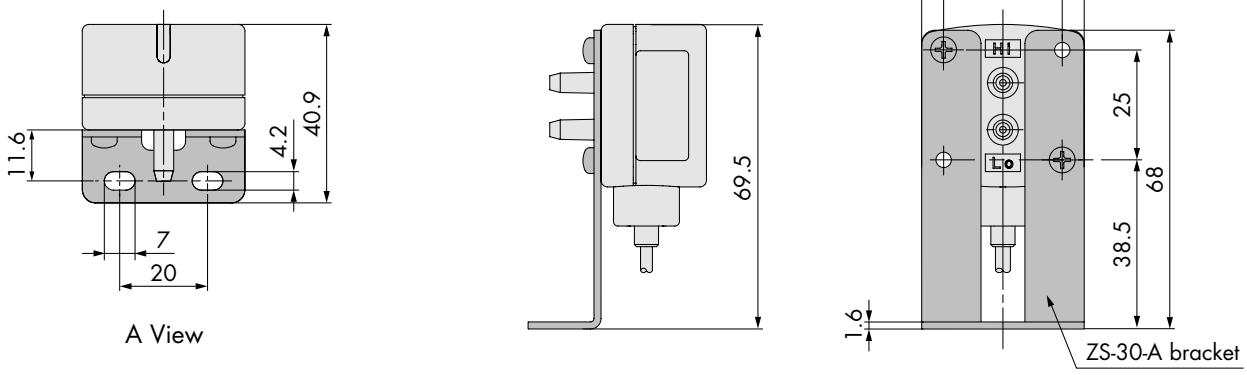

Pressure Sensor For General Fluids

Series PSE560

Features

- *Remote sensor for fluids and wet air*
- *All wetted parts stainless steel*
- *1-5v or 4-20mA analogue output*
- *Choice of connection thread types*
- *Robust metal case*
- *IP65 splashproof construction*
- *Available for positive and vacuum pressures*
- *Can be specified with connector for SMC display units*



How to Order

PSE56 0 – 01 – – C2

Pressure sensing range

0	Positive pressure (0 to 1 MPa)
1	Vacuum (0 to –101 kPa)
3	Compound pressure (–100 to 100 kPa)
4	Positive pressure (0 to 500 kPa)

Port size

01	R 1/8 (With M5 female thread)
02	R 1/4 (With M5 female thread)
A2	URJ 1/4
B2	TSJ 1/4

Output specifications

Nil	Voltage output type 1 to 5 V
28	Current output type 4 to 20 mA

Option (Connector)

Nil	C2
Without	Connector for PSE300 or PSE200 displays 1 pc. 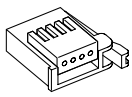

Note 1) Current output type cannot be connected to PSE20☐ or PSE30☐.
Note 2) The connector is not connected to the cable and is supplied loose at the time of shipment.

Accessories

Description	Part no.	Note
Connector for PSE300	ZS-28-C	1 pc.

Specifications

Conforms to CE marking and UL (CSA) standards.

Model	PSE560	PSE561	PSE563	PSE564
Rated pressure range	0 to 1 MPa	0 to –101 kPa	–100 to 100 kPa	0 to 500 kPa
Proof pressure	1.5 MPa	500 kPa	500 kPa	750 kPa

Model		PSE56☐-☐	PSE56☐-☐-28
Fluid		Fluid, including gas, that will not corrode Stainlesss steel 316L	
Power supply voltage		12 to 24 VDC ±10%, Ripple (p-p) 10% or less (With power supply polarity protection)	
Current consumption		10 mA or less	—
Output specification		Analog output 1 to 5 V (Within rated pressure range) Output impedance: Approx. 1 kΩ	Analog output 4 to 20 mA (Within rated pressure range) Allowable load impedance: 500 Ω or less (at 24 VDC) 100 Ω or less (at 12 VDC)
Accuracy (Ambient temperature of 25°C)		±1% F.S. or less	
Linearity		±0.5% F.S. or less	
Repeatability		±0.2% F.S. or less	
Power supply voltage effect		±0.3% F.S. or less	
Resistance	Enclosure	IP65	
	Operating temperature range	Operating: –10 to 60°C, Stored: –20° to 70°C (No condensation or freezing)	
	Operating humidity range	Operating/Stored: 35 to 85% RH (No condensation)	
	Withstand voltage	250 VAC for 1 minute between live parts and case	
	Insulation resistance	50 MΩ between live parts and case (at 50 VDC)	
Temperature characteristics		±2% F.S. or less (0 to 50°C, based on 25°C), ±3% F.S. or less (–10 to 60°C, based on 25°C)	

FOR MORE DETAILS
SEE OUR SPECIFIC CATALOGUES,
PRODUCTS CD's OR ONLINE INFORMATION

Piping Specifications

Model		01	02	A2	B2
Port size		R 1/8 M5	R 1/4 M5	URJ 1/4	TSJ 1/4
Material		Case: C3604 + nickel plated, Piping port/pressure sensor: Stainless steel 316L			
Sensor cable		PSE56□-□: Oil proof 3-wire heavy-duty vinyl cable with air tube (0.2 mm²) PSE56□-□-28: Oil proof 2-wire heavy-duty vinyl cable with air tube (0.2 mm²)			
Weight	With sensor cable	193 g	200 g	203 g	193 g
	Without sensor cable	101 g	108 g	111 g	101 g

Dimensions

PSE56□-$^{01}_{02}$

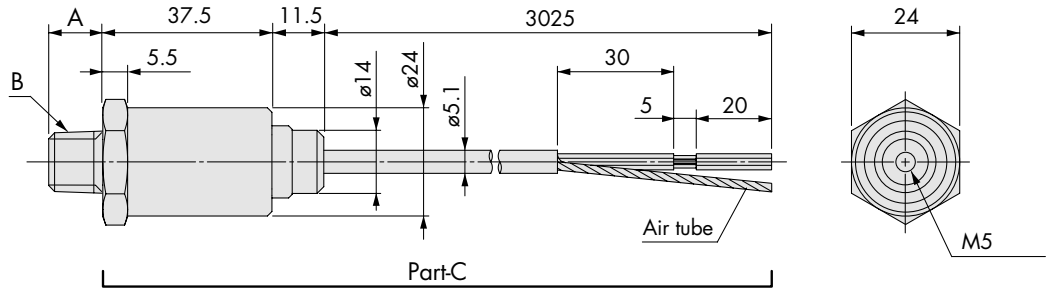

* The dimensions of Part C are common to all PSE56□ models.

PSE56□-A2

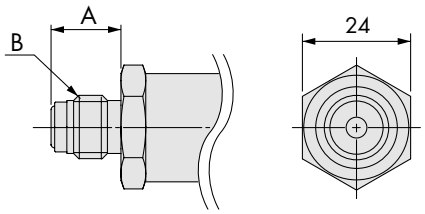

Model	A	B
PSE56□-01	8.2	R 1/8
PSE56□-02	12	R 1/4
PSE56□-A2	15.5	URJ 1/4
PSE56□-B2	9.5	TSJ 1/4

PSE56□-B2

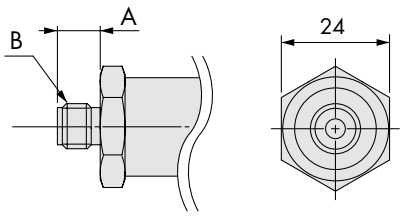

Controller
Series PSE300



Features

- *Display unit for remote sensors*
- *Red / Green dual colour display*
- *Two independent digital outputs*
- *Programmable response time and auto-setting function*
- *Optional analogue output or autoshift input*
- *Suitable for all SMC remote sensors with 1-5v output*
- *Power output for sensor to simplify wiring*
- *Can also display imperial units*
- *Panel mounting kit and brackets available, compact design to reduce panel sizes*
- *Keys can be locked to prevent accidental adjustment*

How to Order

Input/Output specifications

0	NPN2 output + 1-5 V output
1	NPN2 output + 4-20 mA output
2	NPN2 output + Auto shift input
3	PNP2 output + 1-5 V output
4	PNP2 output + 4-20 mA output
5	PNP2 output + Auto shift input

PSE30 0 – L C

L

Power supply/Output connection cable

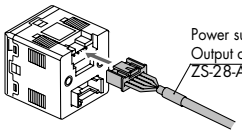

Note) The cable is unassembled in the factory, but is included with the shipment.

C

Sensor connector

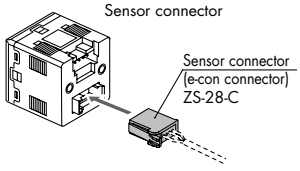

Note) The connector is unassembled in the factory, but is included with the shipment.

Accessories

ZS-28-B

Bracket

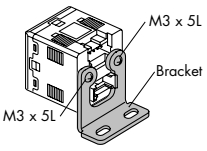

ZS-27-C

Panel mount adapter

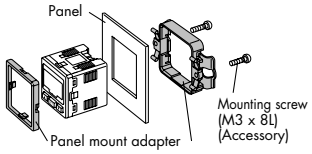

ZS-27-D

Panel mount adapter + Front protective cover

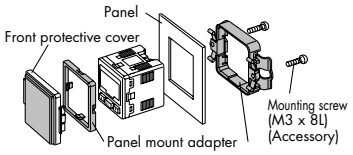

Specifications

Conforms to CE marking and UL (CSA) standards.

Model		PSE30□					
Set (differential) pressure range		–101 to 101 kPa	10 to –101 kPa	–10 to 100 kPa	–0.1 to 1 MPa	–50 to 500 kPa	–0.2 to 2 kPa
Pressure range Note 1)		For compound pressure	For vacuum	For low pressure	For positive pressure		For low difference pressure
Rated (differential) pressure range		–100 to 100 kPa	0 to –101 kPa	0 to 100 kPa	0 to 1 MPa	0 to 500 kPa	0 to 2 kPa
Power supply voltage		12 to 24 VDC, Ripple (p-p) 10% or less (With power supply polarity protection)					
Current consumption		50 mA or less (Current consumption for sensor is not included.)					
Sensor input		1 to 5 VDC (Input impedance: 1 MΩ)					
	No. of inputs	1 input					
	Input protection	With excess voltage protection (Up to 26.4 V)					
Hysteresis		Hysterisis mode: Variable, Window comparator mode: Variable					
Switch output		NPN or PNP open collector output: 2 outputs					
	Maximum load current	80 mA					
	Maximum load voltage	30 VDC (at NPN output)					
	Residual voltage	1 V or less (With load current of 80 mA)					
	Output protection	With short circuit protection					
Response time		1 ms or less					
	Anti-chattering function	Response time settings for anti-chattering function: 20 ms, 160 ms, 640 ms, 1280 ms					
Repeatability		±0.1% F.S. or less					
Analogue output	Voltage output Note 2)	Output voltage: 1 to 5 V (Within rated pressure range (Differential pressure)), Output impedance: Approx. 1 kΩ Linearity: ±0.2% F.S. (Not including sensor accuracy), Response speed: 150 ms or less					
	Accuracy (To display value) (25°C)	±0.6% F.S. or less				±1.0% F.S. or less	±1.5% F.S. or less
	Current output Note 2)	Output current: 4 to 20 mA (Within rated pressure range) Maximum load impedance: 300 Ω (at 12 VDC), 600 Ω (at 24 VDC), Minimum load impedance: 50 Ω Linearity: ±0.2% F.S. (Not including sensor accuracy), Response time: 150 ms or less					
	Accuracy (To display value) (25°C)	±1.0% F.S. or less				±1.5% F.S. or less	±2.0% F.S. or less
Display accuracy (Ambient temperature of 25°C)		±0.5% F.S. ±2 digits or less	±0.5% F.S. ±1 digit or less				
Display		3 + 1/2 digit, 7 segment indicator, 2-color display (Red/Green), Sampling frequency: 5 times/sec					
Indicator light		OUT1: Lights up when ON (Green), OUT2: Lights up when ON (Red)					
Auto shift input Note 2)		Non-voltage input (Reed or Solid state), Low level input: 5 ms or more, Low level: 0.4 V or less					
Resistance	Enclosure	IP40					
	Operating temperature range	Operating: 0 to 50°C, Stored: –10 to 60°C (No freezing or condensation)					
	Operating humidity range	Operating/Stored: 35 to 85% RH (No condensation)					
	Withstand voltage	1000 VAC for 1 minute between live parts and case					
	Insulation resistance	50 MΩ or more between live parts and case (at 500 VDC Mega)					
Temperature characteristics		±0.5% F.S. or less (Based on 25°C)					
Connection		Power supply/Output connection: 5P connector, Sensor connection: 4P connector					
Material		Front case: PBT, Rear case: PBT					
Weight	With power supply/output connection cable	85 g					
	Without power supply/output connection cable	30 g					

Note 1) Pressure range can be selected during initial setting.
Note 2) Auto shift function is not available when analogue output option is selected.
Also, analog output option is not available when auto shift function is selected.
Note 3) The following units can be selected:
For vacuum & compound pressure: kPa·kgf/cm²·bar·psi·mmHg·inHg
For positive pressure & low pressure: MPa·kPa·kgf/cm²·bar·psi
For low differential pressure: kPa·mmH₂O

Analog Output

1 to 5VDC

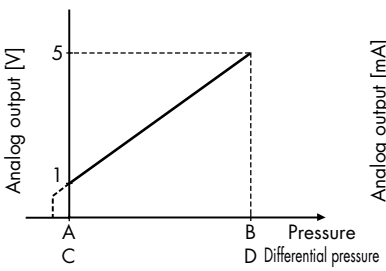

4 to 20 mADC

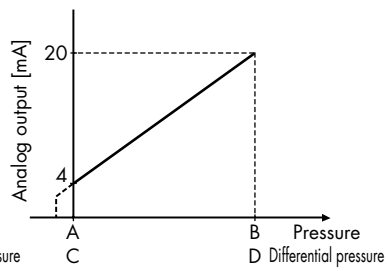

Range	Rated pressure range	A	B
For vacuum	0 to –101 kPa	0	–101 kPa
For compound pressure	–100kPa to 100 kPa	–100 kPa	100 kPa
For positive pressure	0 to 1 MPa	0	1 MPa
	0 to 500 kPa	0	500 kPa

Range	Rated differential pressure range	C	D
For low differential pressure	0 to 2 kPa	0	2 kPa

Dimensions

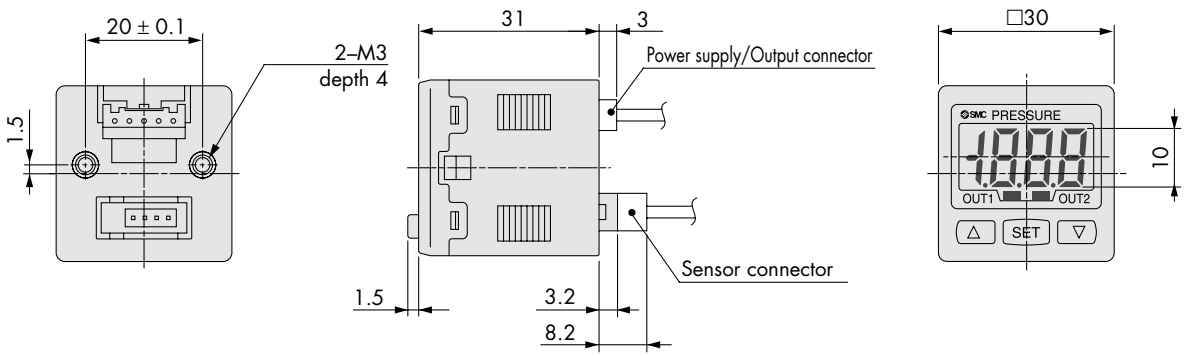

Power supply/Output connection cable (ZS-28-A)

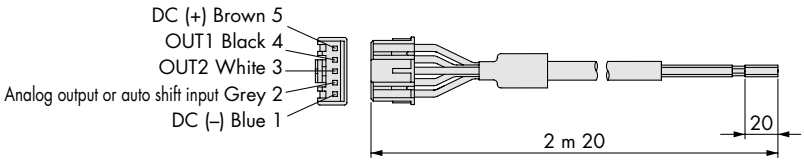

Sensor connector

PIN no.	Terminal
1	DC (+)
2	N.C.
3	DC (–)
4	IN (1 to 5 V)

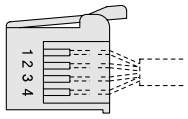

With bracket

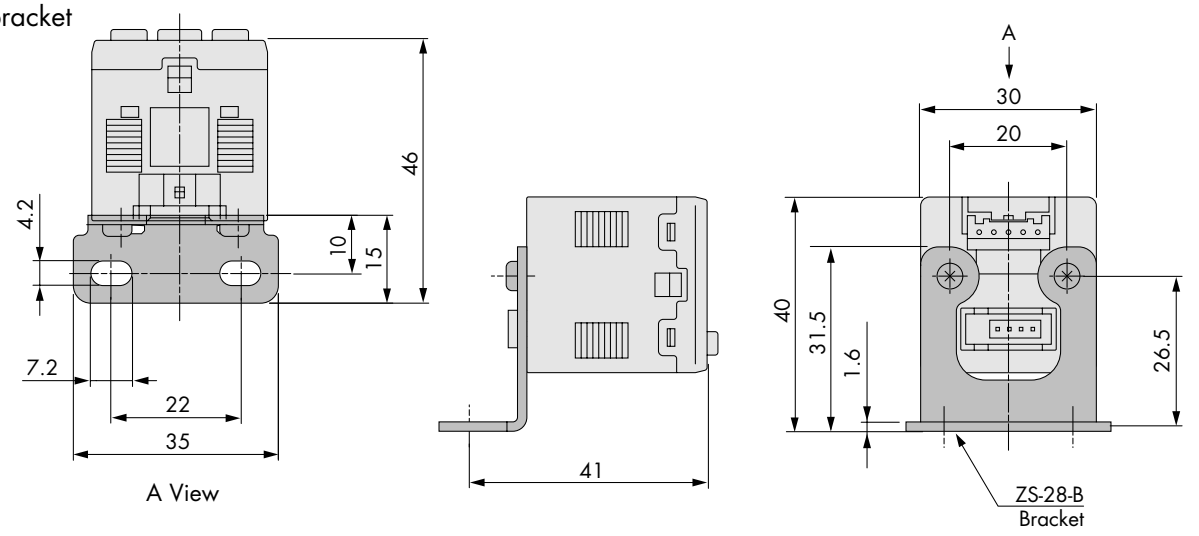

With panel mount adapter

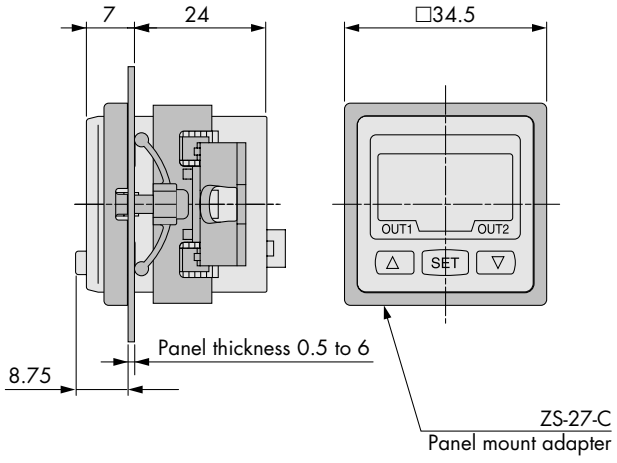

With panel mount adapter + Front protective cover

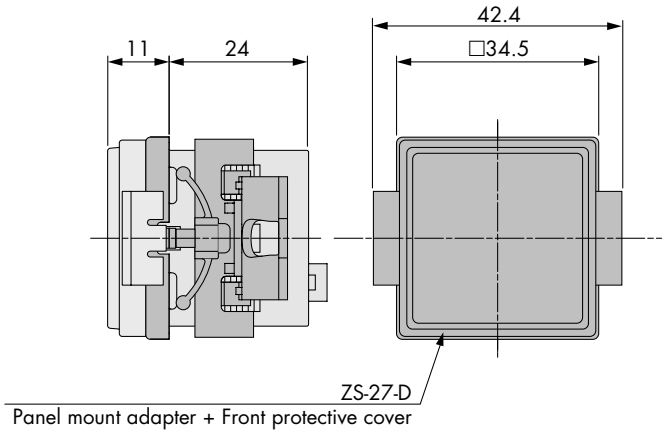

Sensors, Switches

Dimensions

Panel cutout dimensions

Mount of single unit

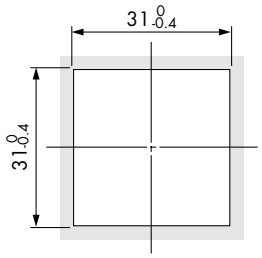

Horizontal stacking mount of multiple units (n pcs.)

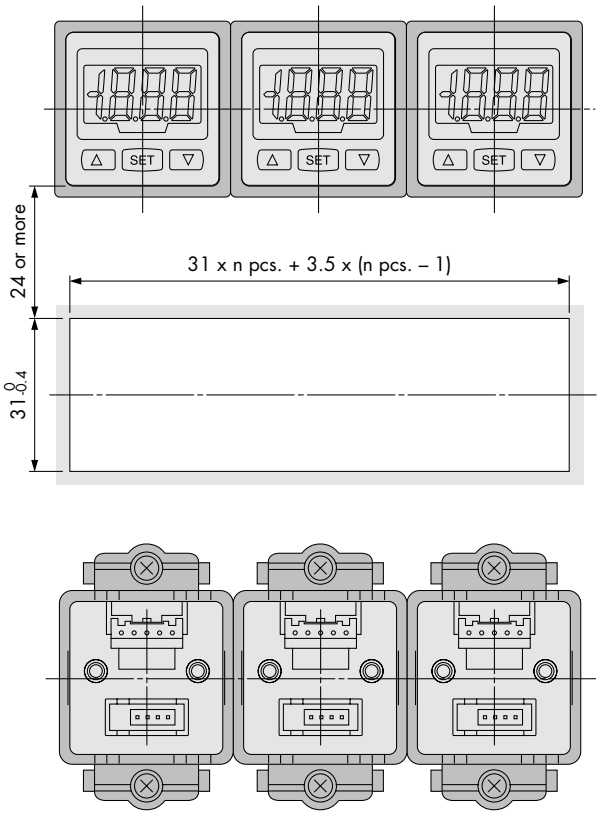

Vertical stacking mount of multiple units (n pcs.)

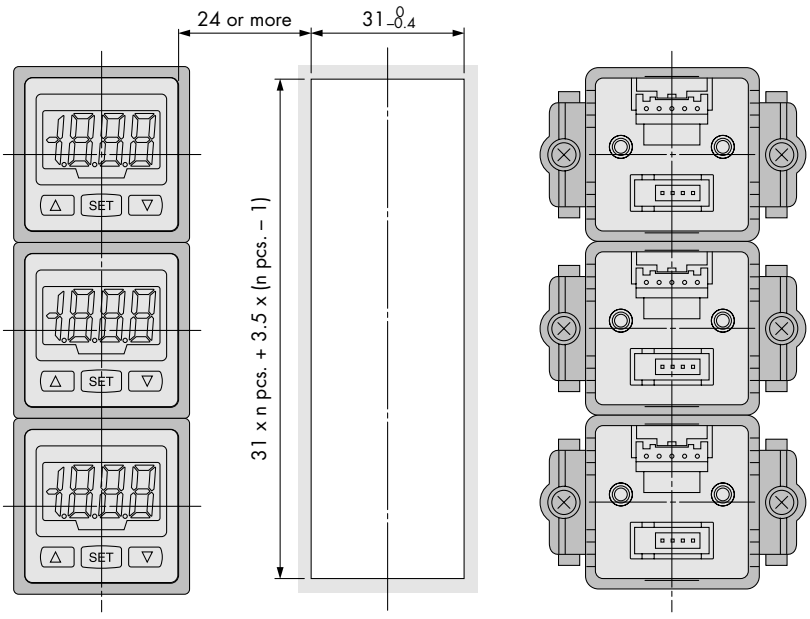

Multi-channel Controller
Series PSE200



Features

- *4 Channel display unit*
- *Monitors up to 4 individual sensors*
- *5 outputs plus autoshift input.*
- *Applicable to several sensor ranges*
- *Simpler to connect and use than four separate display units*
- *Saves space compared to four displays*
- *Can display metric or imperial units*
- *Sensors and power lead removable for easy installation*

How to Order

PSE20 0 — 4C

Input/Output specifications

0	NPN 5 outputs + Auto shift input
1	PNP 5 outputs + Auto shift input

Option 2

4C	Sensor connector included (4 pcs.) 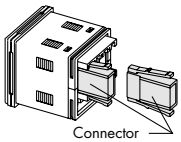

Note) Spare sensor connectors can be ordered under part number. 25-28-C

Accessories

Nil	Without panel mount/protective cover
ZS-26-B	Panel mount 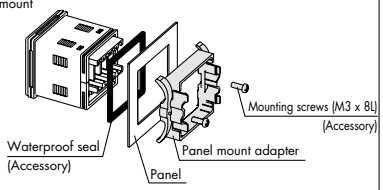
ZS-26-C	Front protective cover + Panel mount 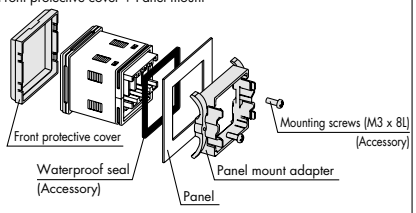
ZS-26-A	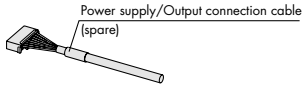
ZS-26-D	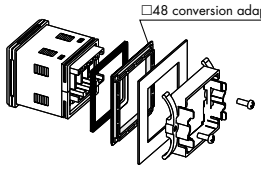
ZS-26-01	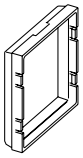 Spare front protective cover

Accessory: Power supply/Output connection cable (2 m)

Included with the controller.

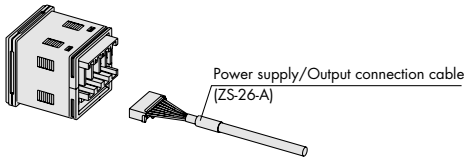

Sensors, Switches

FOR MORE DETAILS
SEE OUR SPECIFIC CATALOGUES,
PRODUCTS CD's OR ONLINE INFORMATION

Specifications

Model		PSE200	PSE201		
Output specification		NPN open collector	PNP open collector		
Power supply voltage		12 to 24 VDC ±10%, Ripple (p-p) 10% or less (With power supply polarity protection)			
Current consumption		55 mA or less (Current consumption for sensor is not included.)			
Power supply voltage for sensor		[Power supply voltage] –1.5 V			
Power supply current for sensor Note 1)		40 mA maximum (100 mA maximum for the total power supply current when 4 sensors are input.)			
Sensor input		1 to 5 VDC (Input impedance: Approx. 800 kΩ)			
	No. of inputs	4 inputs			
	Input protection	With excess voltage protection (Up to 26.4 V)			
Hysteresis	Hysteresis mode	Variable			
	Window comparator mode	3-digit fixed			
Switch output	No. of outputs	5 outputs (CH1: 2 outputs, CH2 to 4: 1 output)			
	Maximum load current	80 mA			
	Maximum load voltage	30 VDC (With NPN)			
	Residual voltage	1 V or less (With load current of 80 mA)			
	Output protection	With short circuit protection			
Response time		5 ms or less			
	Anti-chattering function	With anti-chattering function, Response time selection: 20 ms, 160 ms, 640 ms			
Repeatability		±0.1% F.S. or less			
Setting/Display accuracy		±0.5% F.S. ±1 digit or less (at ambient temperature of 25° ±3°C)			
Display		For measured value display: 4-digit, 7-segment indicator, Display color: Yellow For channel display: 1-digit, 7-segment indicator, Display color: Red			
Indication light		Red (Lights up when output is ON.)			
Auto shift input		Non-voltage input (Reed or Solid state), Input 10 ms or more, Independently controllable auto shift function ON/OFF			
Auto identification function Note 2)		With auto identification function			
Resistance	Enclosure	Front face: IP65, Other: IP40			
	Ambient temperature range	Operating: 0° to 50°C, Stored: –10° to 60°C (No freezing or condensation)			
	Ambient humidity range	Operating/Stored: 35 to 85% RH (No condensation)			
Temperature characteristics		±0.5% F.S. or less based on 25°C			
Connection		Power supply/Output connection: 8P connector, Sensor connection: 4P connector			
Material		Enclosure: PBT; Display: Transparent nylon; Back rubber cover: CR			
Weight		Approx. 60 g (Power supply/output connecting cable not included)			
Applicable pressure sensor		PSE530 (For high pressure)	PSE531 (For vacuum)	PSE532 (For low pressure)	PSE533 (For compound pressure)
Regulating pressure range		–0.1 to 1 MPa	10 to –101 kPa	–10 to 101 kPa	–101 to 101 kPa
Set pressure resolution	kPa	—	0.1	0.1	0.1
	MPa	0.001	—	—	—
	kgf/cm²	0.01	0.001	0.001	0.001
	bar	0.01	0.001	0.001	0.001
	psi	0.1	0.01	0.01	0.02
	mmHg	—	1	—	1
	InHg	—	0.1	—	0.1

Note 1) If the Vcc and 0 V side of the sensor input connector are short circuited, the inside of the controller will be damaged.
Note 2) Auto identification function comes with "Series PSE53□" pressure sensor only. Other SMC series (PSE510 and PSE520) are not equipped with this function.

Dimensions

PSE200 & PSE201

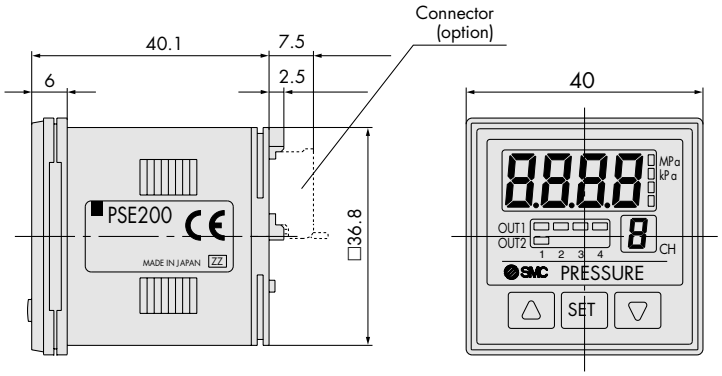

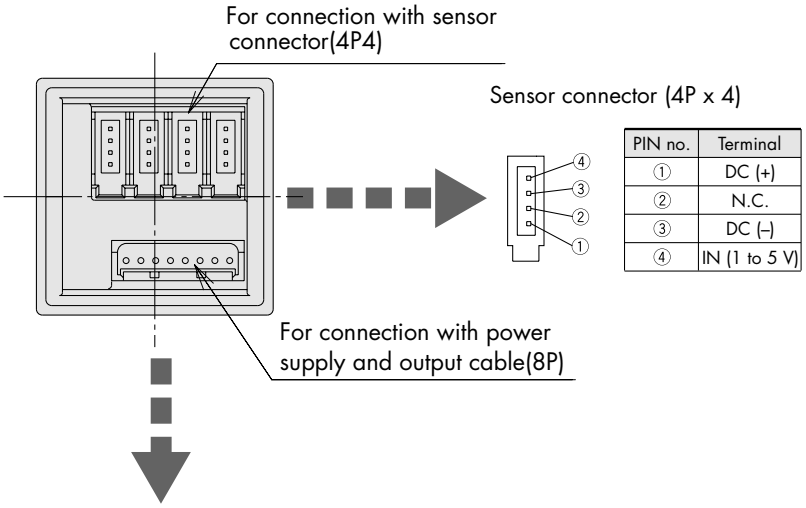

PIN no.	Terminal
①	DC (+)
②	N.C.
③	DC (–)
④	IN (1 to 5 V)

Power supply/Output connector (8P)

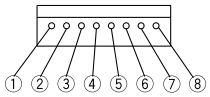

PIN no.	Terminal
①	DC (+)
②	DC (–)
③	CH1_OUT1
④	CH1_OUT2
⑤	CH2_OUT1
⑥	CH3_OUT1
⑦	CH4_OUT1
⑧	Auto shift input

Power supply/Output connection cable (Included)

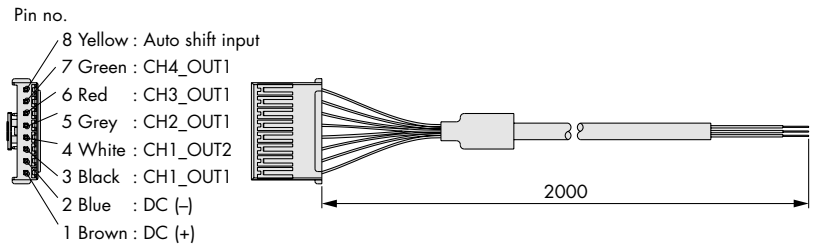

Dimensions

Front protective cover + Panel mount

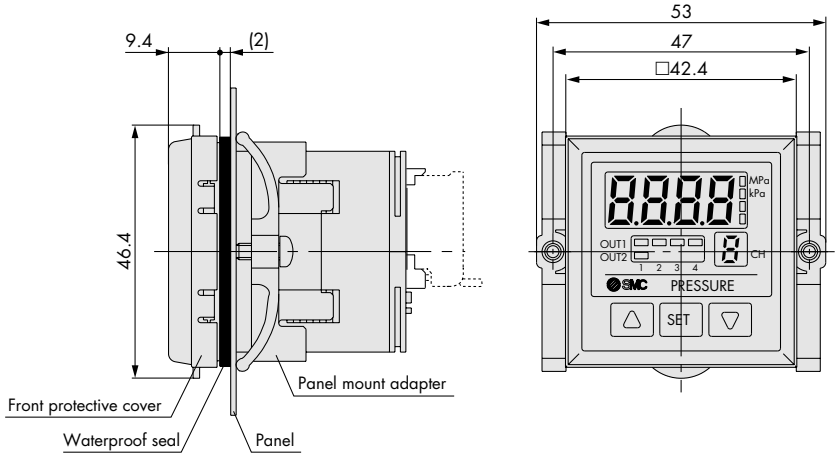

□48 conversion adapter + Panel mount

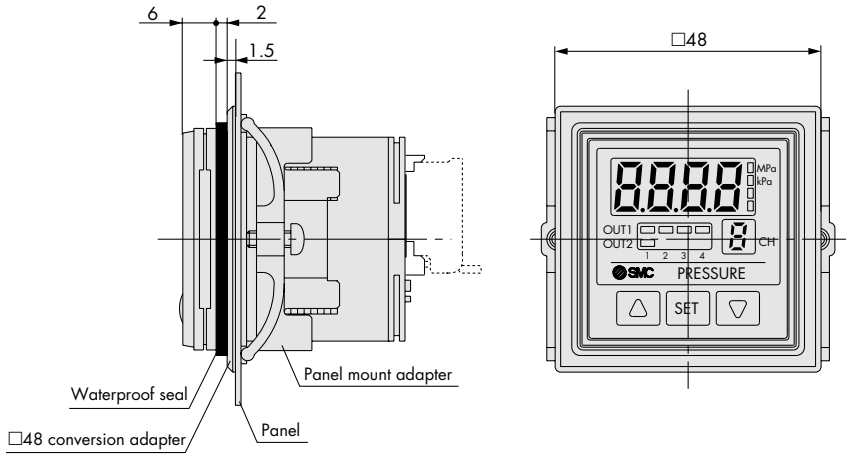

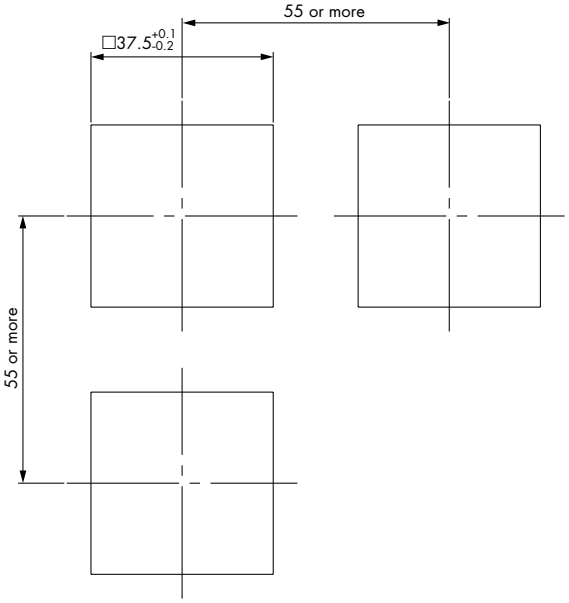

Panel fitting dimension
Applicable panel thickness: 0.5 to 8 mm

Air Catch Sensor
Series ISA2



Features

- *Stable detection of objects occluding an orifice*
- *Used to detect presence or absence of a workpiece*
- *Also used to confirm workpieces are correctly positioned*
- *Unaffected by supply pressure variations*
- *Back pressure sensing detects underpressure and overpressure*
- *Integral pressure gauge and indicator lights*
- *Adjustable internal orifice with locking control*
- *Modular construction can be used individually or in a bank*

Also Available

Manifold type with control unit and centralised wiring.



How to Order Single Sensor Units

Air catch sensor

ISA2 – G F E2 1

Detection distance

G	0.01 to 0.25 mm
H	0.03 to 0.5 mm

Piping specifications

F	G 1/8

Pressure gauge

E2	MPa single notation	0.2 MPa	Square embedded pressure gauge
Z2*	PSI single notation		
E4	MPa single notation	0.4 MPa	
Z4*	PSI single notation		
G2	MPa single notation	0.2 MPa	Round pressure gauge
P2*	MPa-PSI double notation		
G4	MPa single notation	0.4 MPa	
P4*	MPa-PSI double notation		

* Made to order.

Output specifications

1	NPN output
5	PNP output

Electrical entry

Individual wiring	Nil	Straight
	L*	Right angle

How to Order Manifolds

IISA2 N PL – 3 B

Control unit

N	Without control unit

Electrical entry and supply port position

PR	Individual wiring with supply port on the right
PL	Individual wiring with supply port on the left

Note) The supply port position is the one when the switch is viewed from the front.

Stations

1	1 station
2	2 stations
3	3 stations
4	4 stations
5	5 stations
6	6 stations

Option

Nil	Without bracket
B	With bracket
D	With mounting bracket for DIN rail

* Made to order.

Accessory Part No.

Lead wire with connector	(Individual wiring type)	Bracket	DIN rail mounting bracket
ISA-8-A Straight, 5 m	ISA-8-B Right angle, 5 m	ISA-4-A With mounting screw 2 pcs.	ISA-9-A

Ordering Example

Individual wiring

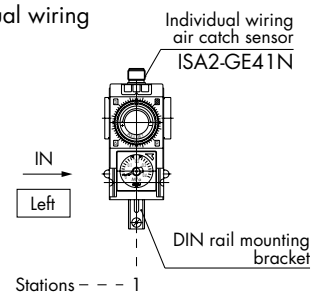

IISA2NPL-1D · · · 1 set (1 station manifold part number)
ISA2-GE41 · · 1 set (Air catch sensor part number)

FOR MORE DETAILS
SEE OUR SPECIFIC CATALOGUES,
PRODUCTS CD's OR ONLINE INFORMATION

How to Order

DIN Rail

ISA-5-□

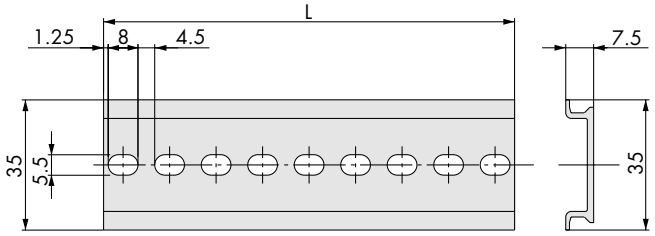

Part no.	L	Applicable models	
		Individual wiring type	Centralized wiring type
ISA-5-1	73.0	IISA2□P□-1	—
ISA-5-2	135.5	IISA2□P□-2	IISA2□S□-1
ISA-5-3	173.0	IISA2□P□-3	IISA2□S□-2
ISA-5-4	210.5	IISA2□P□-4	IISA2□S□-3
ISA-5-5	248.0	IISA2□P□-5	IISA2□S□-4
ISA-5-6	285.5	IISA2□P□-6	IISA2□S□-5
ISA-5-7	323.0	—	IISA2□S□-6

Pressure Gauge for Air Catch Sensor

Square embedded pressure gauge

GC3− □ 4 AS

Notation specifications

Nil	MPa single notation
P	PSI single notation

Maximum pressure indication

2	0.2 MPa
4	0.4 MPa

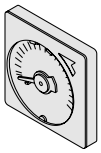

Round pressure gauge

G36− □ 4 − □ 01

Notation specifications

Nil	MPa single notation
P Note)	MPa-PSI double notation

Maximum pressure indication

2	0.2 MPa
4	0.4 MPa

Connection thread

Nil	R 1/8

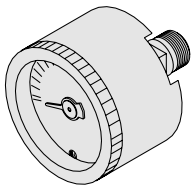

Note) For double notation of MPa and PSI, add "-X30" at the end of part number.
Example) G36-P4-01-X30

Regulator

AR 20 − F 02E − 1 □

Option specification

Nil	None
N	Non-relieving
R	Flow direction: Right to left

When specifying more than one option, enter symbols first in numerical, then in alphabetical orders.

2 Port Solenoid Valve

VCA27A− 5 D S − 4 − 02F − Q

Voltage

1	100 VAC
2	200 VAC
3	110 VAC
4	220 VAC
5	24 VDC
6	12 VDC
36	230 VAC

Port size

02F	G 1/4

CE marked

Throttle

Nil	Without throttle and manual lock
S	With throttle
B	With manual lock
K	With manual lock and throttle

Standard Specifications

Model			AR20
Port size			1/4
Fluid			Air
Proof pressure			1.5 MPa
Maximum operating pressure			1.0 MPa
Set pressure range			0.02 to 0.2 MPa
Gauge port size Note 1)			1/8
Relief pressure			Set pressure + 0.05 MPa {at relief flow of 0.1 ℓ/min(ANR)}
Ambient and fluid temperature			−5° to 60°C (No condensation)
Construction			Relieving type
Weight (kg)			0.29
Pressure gauge	0.2 MPa	Round	G36-2-01
		Square embedded Note 2)	GC3-2AS

Note 1) The type with square embedded pressure gauge does not have connection.
Note 2) With an O-ring (1 pc.) and mounting screws (2 pcs.).

Standard Specifications

Valve specifications	Valve type		Direct operation poppet
	Fluid		Air, Inert gas
	Withstand pressure MPa		2.0
	Body material		Al
	Seal material		HNBR
	Ambient temperature °C		−20° to 60°
	Fluid temperature °C		−10° to 60° (No freezing)
	Enclosure		Dustproof and jetproof (Equivalent to IP65)
	Atmosphere		Environment with no corrosive or explosive gas
	Valve leakage cm^3/min (ANR)		0.2 or less
	Mounting orientation		Free
Coil specifications	Rated voltage		24/12 VDC, 100/110/200/220 VAC (50/60 Hz)
	Allowable voltage fluctuation		±10% rated voltage
	Type of coil insulation		B type
	Power consumption	DC	VCA2: 6.5 W
	Apparent power	Note 1) AC 50 Hz	VCA2: 7.5 VA
		60 Hz	

Note 1) Since the AC specifications include a rectifying device, there is no difference between the apparent power required for starting and holding.

Specifications

Model			ISA2-G□□□1□	ISA2-G□□□5□	ISA2-H□□□1□	ISA2-H□□□5□
Detection distance			0.01 to 0.25 mm		0.03 to 0.50 mm	
Fluid			Dry air (filtered to 5 µm)			
Operating pressure range			30 to 200 kPa		50 to 200 kPa	
Recommended detection nozzle			ø1.5		ø2.0	
Consumption flow rate ℓ/min (ANR)	Supply pressure	50 kPa	5 or less		10 or less	
		100 kPa	8 or less		15 or less	
		200 kPa	12 or less		22 or less	
Power supply voltage			12 to 24 VDC, Ripple (p-p) 10% or less (With power polarity protection)			
Current consumption			15 mA or less			
Switch Output			NPN open collector: one output	PNP open collector: one output	NPN open collector: one output	PNP open collector: one output
	Maximum load current		80 mA			
	Maximum load voltage		30 VDC (at NPN output)			
	Residual voltage		1.5 V or less (at 80 mA)			
	Output protection		Yes			
Repeatability (Including temperature characteristics)			0.01 mm or less (Detection distance range 0.01 to 0.15 mm, supply pressure 100 to 200 kPa)		0.01 mm or less (Detection distance range 0.03 to 0.15 mm, supply pressure 100 to 200 kPa)	
Hysteresis			0.01 mm or less (Detection distance range 0.01 to 0.15 mm)		0.01 mm or less (Detection distance range 0.03 to 0.15 mm)	
Indicator light			LED level meter with 1 red, 2 green (Set value < detection distance: red, Set value = detection distance: green 1, Set value > detection distance: green 1 + green 2)			
Environmental Resistance	Enclosure		IP66			
	Operating temperature range		Operating: 0 to 60°C, Stored: –20 to 70°C (No condensation or no freezing)			
	Operating humidity range		Operating/stored: 35 to 85%RH (No condensation)			
	Withstand voltage		1000 VAC in 50/60 Hz for 1 minute between external terminal and case			
	Insulation voltage		2 MΩ or more between external terminal and case (measured with 500 VDC megaohm meter)			
Port size			F type: G 1/8			
Lead wire (Individual wiring type)			4-core, oil resistant, cable (0.64 mm²) with M12, 4-pin pre-wired connector			
Terminal block box (Centralized wiring type)			Front wiring (Electrical entry ø21)			
Weight			Individual wiring type (body only): 253 g. Terminal box: 205 g, lead wire: 278 g, connecting bracket with sealing for additional station: 4 g			

FOR MORE DETAILS
SEE OUR SPECIFIC CATALOGUES,
PRODUCTS CD's OR ONLINE INFORMATION

Dimensions: Individual Wiring Type

With bracket

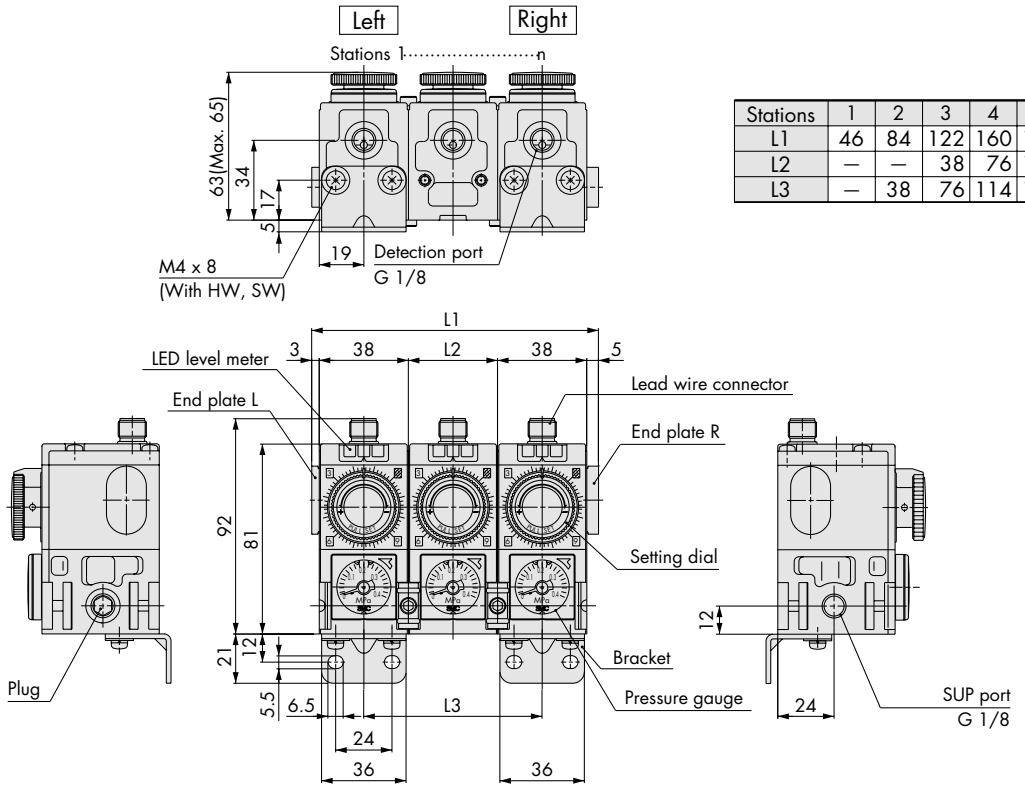

Stations	1	2	3	4	5	6
L1	46	84	122	160	198	236
L2	–	–	38	76	114	152
L3	–	38	76	114	152	190

With DIN rail

Electrical entry dimensions

Straight union	Right angle
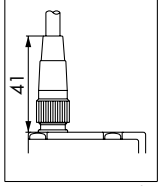	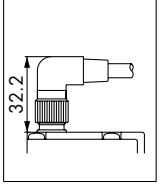

The direction of a right angle connector cannot be changed.

Stations	1	2	3	4	5	6
L1	46	84	122	160	198	236
L2	–	–	38	76	114	152
L3	–	38	76	114	152	190
L4	62.5	120	162.5	200	237.5	275
L5	73	135.5	173	210.5	248	285.5

General Purpose Pressure Switch

Series ISG

Features

ISG General Purpose Switch is widely used in machine tools, industrial machines, compressors, chemical plants, power plants, machinery for ships, and for automatic pressure control such as hydraulic, water, liquid and atmospheric pressure.



How to Order

ISG 1 1 0 – 03 0 – B – Q

Multipurpose pressure switch

Enclosure

1	Open type (Non-waterproof)
2	Dripproof (Equivalent to IP44)

Operating pressure range

1	0.02 to 0.3 MPa
2	0.05 to 0.7 MPa
3	0.1 to 1.0 MPa
9	–10 to –100 kPa

Material

0	Copper alloy
1	Stainless steel 316

Port size

03	R 3/8
N03	NPT 3/8

Hysteresis scale plate

0	None
1	Hysteresis scale plate

Note) Not available for ISG 19/29□ type

Contacts/Bulb gland

-	Type A 20a (Standard)
B	Type A 20b
C	Type A 20c

Specifications

Model		Operating pressure range (MPa)	Hysteresis adjusting range (MPa)	Proof pressure (MPa)	Repeatability (MPa)	Body material in contact with fluid material	Hysteresis scale plate	Electrical entry
Open type (Non-waterproof)	Dripproof							
ISG110-030	ISG210-030	0.02 to 0.3	0.01 to 0.2	1.0	±0.006	Brass, Phosphor bronze	None	(Open type) Grommet
ISG110-031	ISG210-031					Brass, Phosphor bronze	Yes	
ISG111-030	ISG211-030					Stainless steel 316	None	
ISG111-031	ISG211-031					Stainless steel 316	Yes	
ISG120-030	ISG220-030	0.05 to 0.7	0.02 to 0.35	1.5	±0.014	Brass, Phosphor bronze	None	(Dripproof) JIS F 8801 Cable gland Type A
ISG120-031	ISG220-031		0.02 to 0.45			Brass, Phosphor bronze	Yes	
ISG121-030	ISG221-030		0.02 to 0.35			Stainless steel 316	None	
ISG121-031	ISG221-031		0.02 to 0.45			Stainless steel 316	Yes	
ISG130-030	ISG230-030	0.1 to 1.0	0.03 to 0.4	1.5	±0.02	Brass, Phosphor bronze	None	20a
ISG130-031	ISG230-031		0.03 to 0.6			Brass, Phosphor bronze	Yes	20b*
ISG131-030	ISG231-030		0.03 to 0.4			Stainless steel 316	None	20c*
ISG131-031	ISG231-031		0.03 to 0.6			Stainless steel 316	Yes	
ISG190-030	ISG290-030	–10 to –100 kPa	7 to 53 kPa	0.5	±2 kPa	Brass, Phosphor bronze	None	
ISG191-030	ISG291-030					Stainless steel 316	None	

Ambient and fluid temp.: 5 to 80°C (No freezing), Port size: R 3/8,
Weight: 1.3 kg (Open type), 1.5 kg (Dripproof)
* Option

Symbol

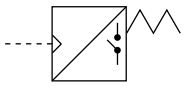

Fluid

Type of operating fluid is limited by the material of the wetted parts.

Fluid	Body material in contact with fluid material	
	Bellows	Fluid entering part
Non corrosive water/Air/Liquid/Inert gas	Phosphor bronze	Brass
Fluids which do not corrode stainless steel 316 e.g. steam (150°C or less)*	Stainless steel 316	Stainless steel 316

* Ambient temperature: 80°C or less.

FOR MORE DETAILS
SEE OUR SPECIFIC CATALOGUES,
PRODUCTS CD's OR ONLINE INFORMATION

Dimensions

Open type

ISG110 to 191-030 (Without hysteresis scale plate)

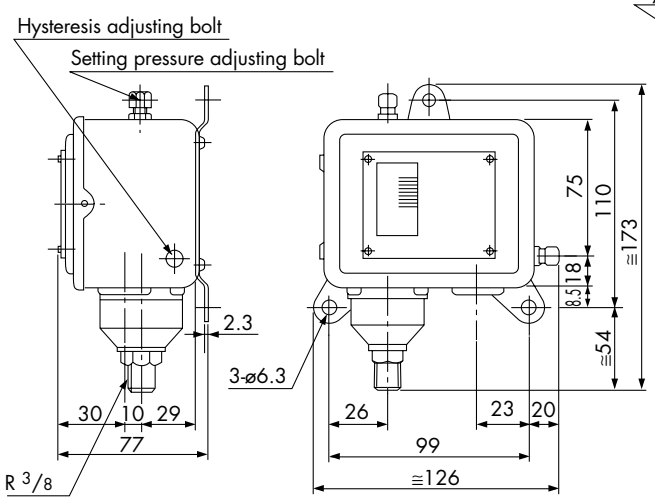

ISG110 to 131-031 (With hysteresis scale plate)

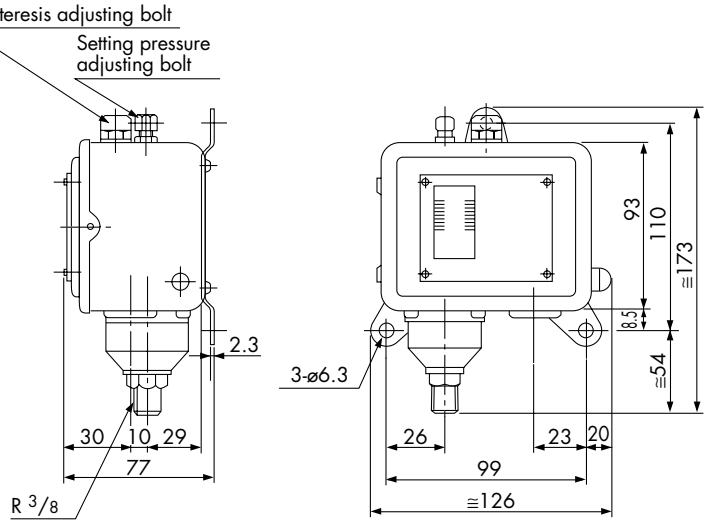

Dripproof type

ISG210 to 291-030 (Without hysteresis scale plate)

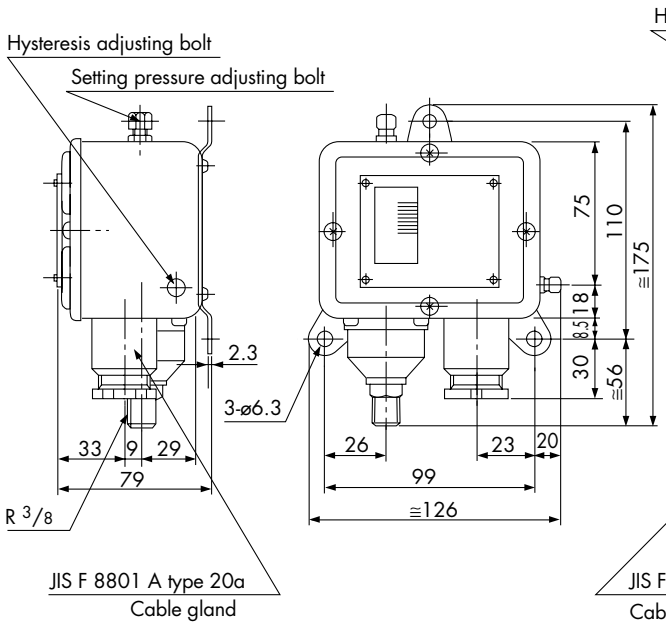

ISG210 to 231-031 (With hysteresis scale plate)

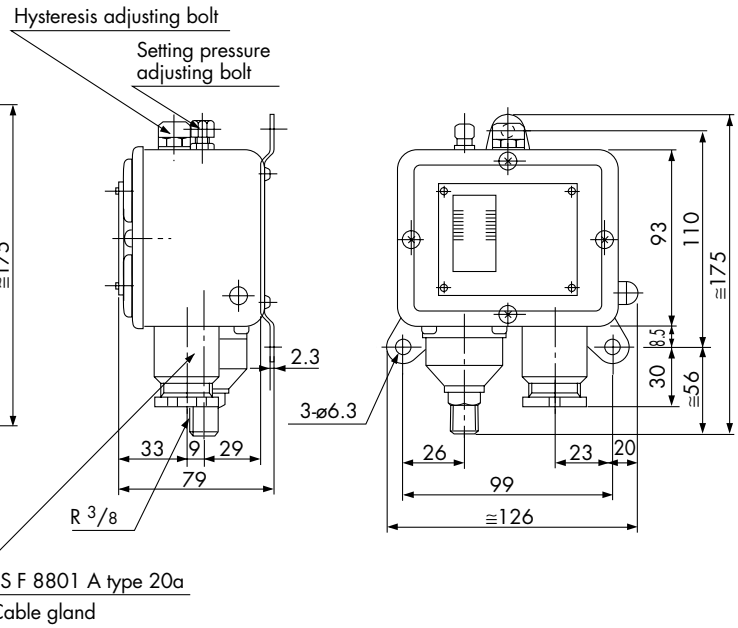

2-Colour Display Digital Flow Switch

Series PFM

Features



- *For air, N_2, AR and CO_2.*
- *A digital flow switch that uses MEMS sensor for detecting the flow.*
- *Compact size, light weight.*
- *Improved visibility with 2-colour display indication.*
- *Two piping directions are possible.*
- *Integrated flow adjustment valve.*
- *Multiple mounting combinations.*

Flow range

Measurement flow range (ℓ/min)	Integrated type Model	Remote type Model	
		Sensor unit	Display unit
0.2 to 10 (0.2 to 5)	PFM710	PFM510	PFM3□□
0.5 to 25 (0.5 to 12.5)	PFM725	PFM525	
1 to 50 (1 to 25)	PFM750	PFM550	
2 to 100 (2 to 50)	PFM711	PFM511	

( ): Fluid: CO_2

Piping variations

	One-touch fitting: ø4, ø6, ø8		Female thread: G 1/8, 1/4	
	Straight	Bottom	Straight	Bottom
Without flow adjustment	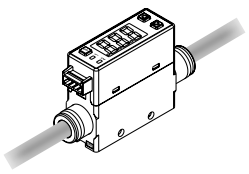	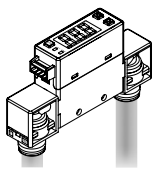	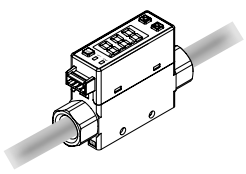	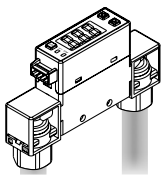
With flow adjustment	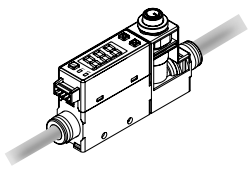	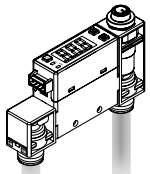	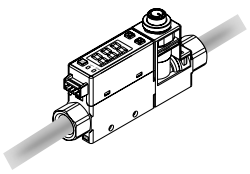	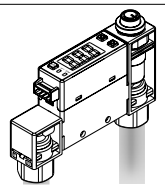

Mounting

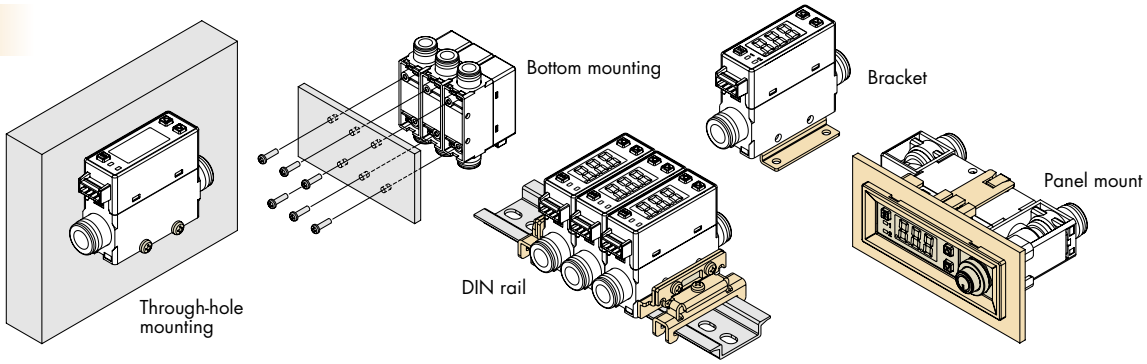

FOR MORE DETAILS
SEE OUR SPECIFIC CATALOGUES,
PRODUCTS CD's OR ONLINE INFORMATION

How to order PFM7

Integrated display

PFM 7 10 □ – C4 □ – A



Type

7	Integrated display

Rated flow range (Flow rate range)

10	0.2 to 10 (5) ℓ/min
25	0.5 to 25 (12.5) ℓ/min
50	1 to 50 (25) ℓ/min
11	2 to 100 (50) ℓ/min

Note) Fluid: CO_2

Flow adjustment valve

-	None
S	Yes

Port size

Symbol	Description	Flow rate range			
		10	25	50	11
F01	G1/8	●	●	●	
F02	G1/4				●
C4	ø4 (5/32") one-touch fitting	●			
C6	ø6 one-touch fitting	●	●	●	●
C8	ø8 (5/16") one-touch fitting		●	●	●

Piping entry direction

-	Straight
L	Bottom

Note) Different combinations of piping entry directions for IN and OUT side are available as made-to-order.

Output specification

A	2 NPN outputs
B	2 PNP outputs
C	1 NPN output + Analogue (1 to 5 V)
D	1 NPN output + Analogue (4 to 20 mA)
E	1 PNP output + Analogue (1 to 5 V)
F	1 PNP output + Analogue (4 to 20 mA)
G	1 NPN output + External input Note 3)
H	1 PNP output + External input Note 3)

Note 3) User can select from accumulated value external reset, auto-shift and auto-shift zero.

How to order PFM5

Remote sensor unit

PFM 5 10 □ – C4 □ – 1



Type

5	Remote sensor unit

Rated flow range (Flow rate range)

10	0.2 to 10 (5) ℓ/min
25	0.5 to 25 (12.5) ℓ/min
50	1 to 50 (25) ℓ/min
11	2 to 100 (50) ℓ/min

Note) Fluid: CO_2

Flow adjustment valve

-	None
S	Yes

Port size

Symbol	Description	Flow rate range			
		10	25	50	11
F01	G1/8	●	●	●	
F02	G1/4				●
C4	ø4 (5/32") one-touch fitting	●			
C6	ø6 one-touch fitting	●	●	●	●
C8	ø8 (5/16") one-touch fitting		●	●	●

Piping entry direction

-	Straight
L	Bottom

Note) Different combinations of piping entry directions for IN and OUT side are available as made-to-order.

Output specification

No.	Description	Applicable display unit
1	Analogue output (1 to 5 V)	PFM30□
2	Analogue output (4 to 20 mA)	PFM31□

How to order PFM3 Flow Sensor Monitor

PFM3 **0** **0** – **L** ☐



Type

3	Remote display unit

Input specification

Symbol	Content	Applicable remote type sensor unit
0	Voltage input	PFM5□□(S)-□-1-□
1	Current input	PFM5□□(S)-□-2-□

Output specification

0	2 NPN outputs + 1 to 5 V output
1	2 NPN outputs + 4 to 20 mA output
2	2 NPN outputs + External input Note)
3	2 PNP outputs + 1 to 5 V output
4	2 PNP outputs + 4 to 20 mA output
5	2 PNP outputs + External input Note)

Note) User can select from accumulated value external reset, auto-shift and auto-shift zero.

Option 2

-	None
F	With sensor connector

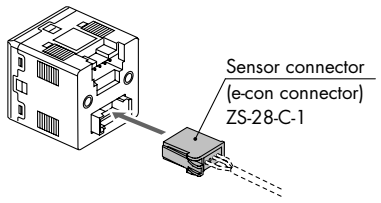

Note) Connector is not connected, but shipped together.

Option 1

-	None
L	Power supply / Output connector

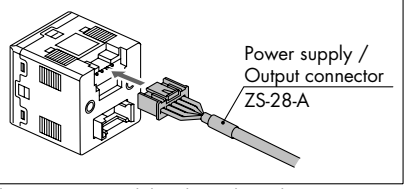

Note) Cable is not connected, but shipped together.

Option / Part No.

Description	Part no.	Note
Power supply / Output connector (2 m)	ZS-28-A	
Bracket	ZS-28-B	With M3 x 5 ℓ (2 pcs.)
Sensor connector	ZS-28-C-1	1 pc.
Panel mount adapter	ZS-27-C	With M3 x 8 ℓ (2 pcs.)
Panel mount adapter + Front protective cover	ZS-27-D	With M3 x 8 ℓ (2 pcs.)

Optional part numbers for PFM7 and PFM5

Part No.	Description	
ZS-33-D	Lead wire with connector (2m)	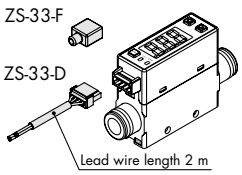
ZS-33-F	Lead wire with connector (2m) + Rubber cover for connector (Silicon rubber)	
ZS-33-M	Bracket (for without flow adjustment valve)	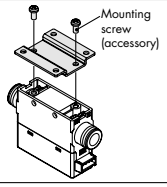
ZS-33-MS	Bracket (for with flow adjustment valve)	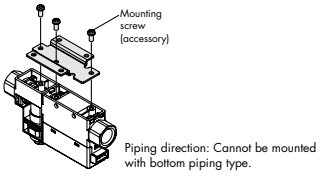
ZS-33-J	Panel mount adapter (for without flow adjustment valve)	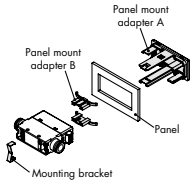
ZS-33-JS	Panel mount adapter (for with flow adjustment valve)	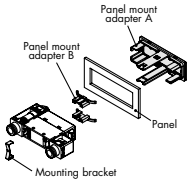

Sensors, Switches

FOR MORE DETAILS
SEE OUR SPECIFIC CATALOGUES,
PRODUCTS CD's OR ONLINE INFORMATION

Specifications PFM7

Model			PFM710	PFM725	PFM750	PFM711
Applicable fluid			Dry air, N_2, Ar, CO_2 (Air quality grade is ISO8573.1-1, 1.2 to 1.6.2.)			
Minimum unit setting Note 1)			0.01 ℓ/min	0.1 ℓ/min	0.1 ℓ/min	0.1 ℓ/min
Accumulated pulse flow rate exchange value			0.1 ℓ/pulse	0.1 ℓ/pulse	0.1 ℓ/pulse	1 ℓ/pulse
Indication unit Note 2)			Real-time flow rate ℓ/min, CFM x 10^{-2} Accumulated flow ℓ, ft^3 x 10^{-1}			
Linearity			Display accuracy: ±3%F.S. or less (Fluid: Dry air) Analogue output accuracy: ±5%F.S. or less			
Repeatability			±1%F.S. or less (Fluid: Dry air) Analogue output accuracy: ±3%F.S. or less			
Pressure characteristics			±5%F.S. or less (based on 0.35 MPa)			
Temperature characteristics			±2%F.S. (15 to 35°C) ±5%F.S. (0 to 50°C)			
Operating pressure range			–100 kPa to 750 kPa			
Rated pressure range			–70 kPa to 750 kPa			
Proof pressure			1 MPa			
Accumulated flow range			Max. 999999 ℓ Note 3)			
Switch output			NPN or PNP open collector output			
	Maximum load current		80 mA			
	Maximum applied voltage		28 VDC (at NPN output)			
	Internal voltage drop		NPN output: 1 V or less (at 80 mA) PNP output: 1.5 V or less (at 80 mA)			
	Response time		1 s (50 ms, 0.5 s, 2 s can be selected.)			
	Output protection		Short-circuit protection, Overcurrent protection			
Accumulated pulse output			NPN or PNP open collector output (Same as switch output)			
Analogue output Note 4)		Response time	1.5 s or less (90% response)			
		Voltage output	Voltage output: 1 to 5 V Output impedance: 1 kΩ			
		Current output	Current output: 4 to 20 mA Max. load impedance: 600 Ω, Min. load impedance: 50 Ω			
Hysteresis Note 5)		Hysteresis mode	Variable			
		Window comparator mode	Variable			
External input			No-voltage input (Reed or Solid state) Input 30 ms or more			
Display method			3-digit, 7-segment LED 2-colour display (Red/Green) Renewed cycle: 10 times/sec			
Status LED's			OUT1: Illuminates when output is turned ON (Green). OUT2: Illuminates when output is turned ON (Red).			
Power supply voltage			24 VDC ± 10%			
Current consumption			55 mA or less			
Environmental resistance	Enclosure		IP40			
	Operating fluid temperature		0 to 50°C (with no freezing and condensation)			

Note 1) User can select between 0.01 ℓ/min and 0.1 ℓ/min for the PFM710, and between 0.1 ℓ/min and 1 ℓ/min for the PFM711 respectively.
If the indication unit is selected to "CFM", the minimum unit setting cannot be changed.
At the time of shipment from the factory, the minimum unit setting is set to 0.1 ℓ/min for the PFM710 and 1 ℓ/min for the PFM711 respectively.
Note 2) Set to "ANR" at the time of shipment from the factory.
"ANR" is used for standard conditions: 20°C, 1 atm and 65%R.H.
"Nℓ/min" is used for normal conditions: 0°C and 1 atm.
When equipped with a unit switching function. (The SI unit (ℓ/min or ℓ) is fixed for types with no unit switching function.)
Note 3) Cleared when the power supply is turned off. Hold function can be selected. (Interval of 2 min or 5 min can be selected).
If the 5 min interval is selected, the life of the memory element (electronic part) is limited to 1 million cycles. (If energised for 24 hours, life is calculated as 5 min x 1 million = 5 million min = 9.5 years). Therefore, if using the hold function, calculate the memory life for your operating conditions, and use within this life.
Note 4) Set to 1.5 s (90%), can be changed to 100 ms.
Note 5) Set to hystresis mode at the time of shipment from the factory. Can be changed to window comparator mode using push-buttons.

Specifications PFM5

Model		PFM510	PFM525	PFM550	PFM511
Applicable fluid		Dry air, N_2, Ar, CO_2 (Air quality grade is ISO8573.1-1, 1.2 to 1.6.2.)			
Accuracy		±3%F.S. or less			
Repeatability		±1%F.S. or less (Fluid: Dry air)			
Pressure characteristics		±5%F.S. or less (based on 0.35 MPa)			
Temperature characteristics		±2%F.S. (15 to 35°C) ±5%F.S. (0 to 50°C)			
Operating pressure range		–100 kPa to 750 kPa			
Rated pressure range		–70 kPa to 750 kPa			
Proof pressure		1 MPa			
Analogue output	Response time	50 msec or 1 s (with response time selection function: 1 s at no-voltage input) → Refer to the internal circuits and wiring examples on page 16.			
	Voltage output	Voltage output: 1 to 5 V Output impedance: 1 kΩ			
	Current output	Current output: 4 to 20 mA Max. load impedance: 600 Ω, Min. load impedance: 50 Ω			
Status LED's		Power ON indicator: Lights when power is turned on (Green). Flow rate indicator: Flashes when flow is applied (Green).			
Power supply voltage		24 VDC ± 10%			
Current consumption		35 mA or less			
Environmental resistance	Enclosure	IP40			
	Operating fluid temperature	0 to 50°C (with no freezing and condensation)			

Note: Flow rate unit is based on standard conditions (20°C, 1 atm, 65% RH).

Specifications PFM3

Model		PFM3□□			
Displayed flow range Note 1)	Dry air, N_2, Ar	0.2 to 10.5 ℓ/min	0.5 to 26.3 ℓ/min	1 to 52.5 ℓ/min	2 to 105 ℓ/min
	CO_2	0.2 to 5.2 ℓ/min	0.5 to 13.1 ℓ/min	1 to 26.2 ℓ/min	2 to 52 ℓ/min
Minimum unit setting		0.01 ℓ/min	0.1 ℓ/min	0.1 ℓ/min	0.1 ℓ/min
Accumulated pulse flow rate exchange value		0.1 ℓ/pulse	0.1 ℓ/pulse	0.1 ℓ/pulse	1 ℓ/pulse
Indication unit		Real-time flow rate ℓ/min, CFM x 10^{-2} Accumulated flow ℓ, ft^3 x 10^{-1}			
Accumulated flow range		1999999 ℓ			
Power supply voltage		24 VDC (ripple ± 10% or less) (With polarity protection)			
Current consumption		50 mA or less			
Sensor input Number of inputs: 1		PFM30□: Voltage input 1 to 5 VDC (input impedance: 1 MΩ) PFM31□: Current input 4 to 20 mADC (input impedance: 250 Ω)			
Hysteresis		Hysteresis mode: Variable, Window comparator mode: Variable			
Switch output		NPN or PNP open collector output: 2 outputs Maximum load current: 80 mA, max. load voltage 30 VDC (at NPN output), Residual voltage 1 V or less (at load current 80 mA), With short-circuit protection			
Accumulated pulse output		NPN or PNP open collector output (Same as switch output)			
Response time		1 s (50 ms, 0.5 s, 2 s can be selected.)			
Repeatability		±0.1%F.S. or less, Analogue output accuracy: ±0.3%F.S. or less			
Analogue output		Voltage output: 1 to 5 VDC (0 ℓ/min to max. rated flow rate value) Output impedance: Approx. 1 kΩ, Accuracy: ±1%F.S. or less (relative to display value) Current output: 4 to 20 mADC (0 ℓ/min to max. rated flow rate value) Max. load impedance: 600 Ω (at 24 VDC), Min. load impedance: 50 Ω Accuracy: ±1%F.S. or less (relative to display value)			
Display accuracy		±0.5%F.S. ± 1 digit or less			
Display method		3+1/2-digit, 7-segment LED 2-color display (Red/Green) Sampling cycle: 10 times/sec			
Status LED's		OUT1: Illuminates when output is turned ON (Green). OUT2: Illuminates when output is turned ON (Red).			
External input		No-voltage input (Reed or Solid state), LOW level input 30 msec or more, LOW level 0.4 V or less			
Enclosure		IP40			
Operating temperature range		Operating: 0 to 50°C Stored: –10 to 60°C (with no freezing and condensation)			
Weight		30 g (Without cable) 85 g (With cable)			

FOR MORE DETAILS
SEE OUR SPECIFIC CATALOGUES,
PRODUCTS CD's OR ONLINE INFORMATION

Dimensions PFM7

PFM7□□-C4/C6/C8

(mm)

One-touch fitting Applicable tube O.D.	A	B
ø4 (5/32")	64.2	92.2
ø6	64.6	92.6
ø8 (5/16")	68	96
ø1/4	64.6	92.6

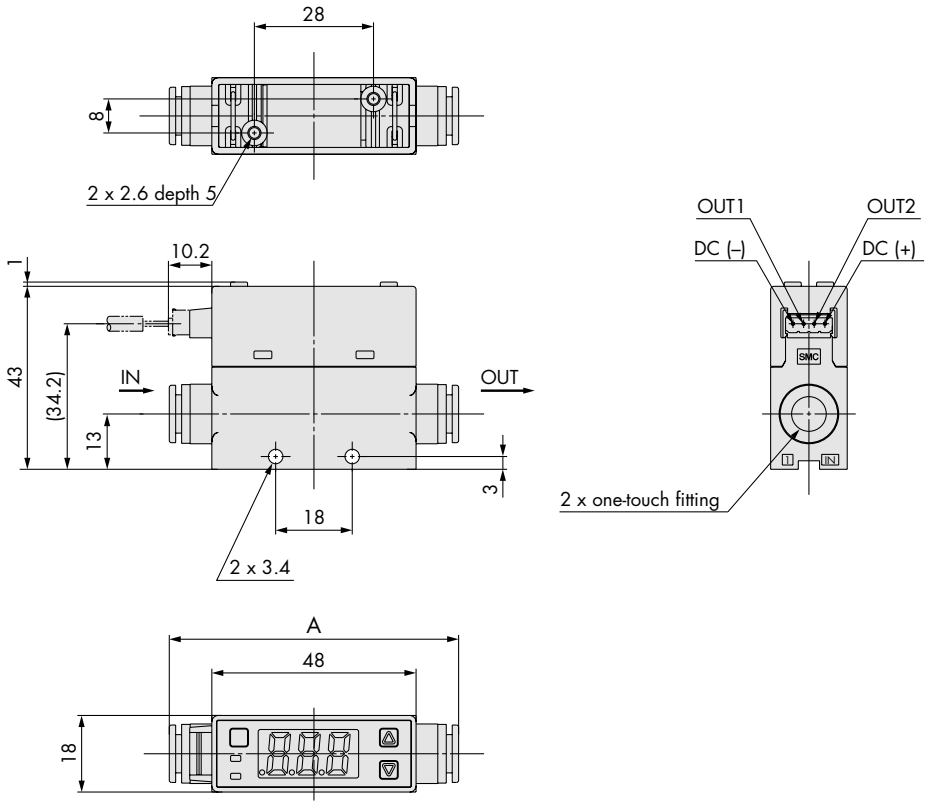

PFM7□S-C4/C6/C8

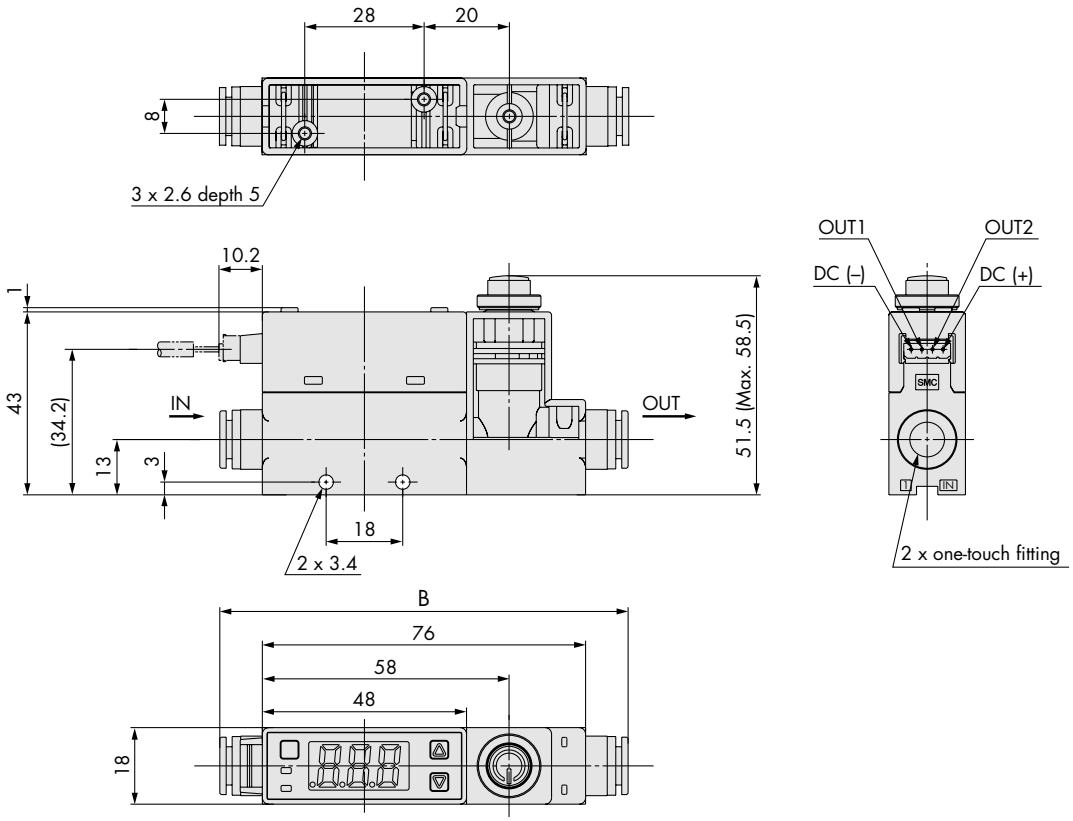

Dimensions

Panel mount / Without flow adjustment valve / Straight

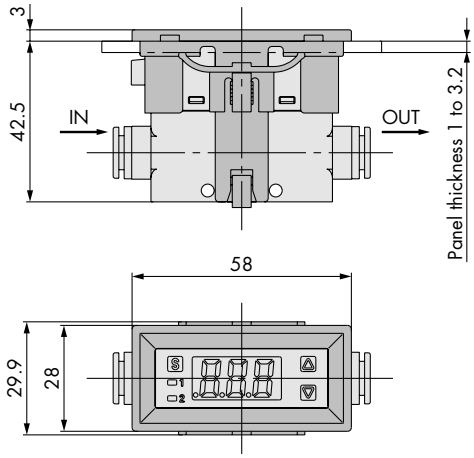

With bracket / Without flow adjustment valve

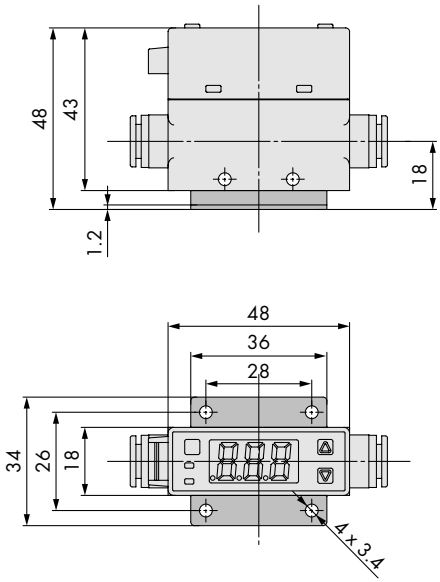

DIN rail mounting

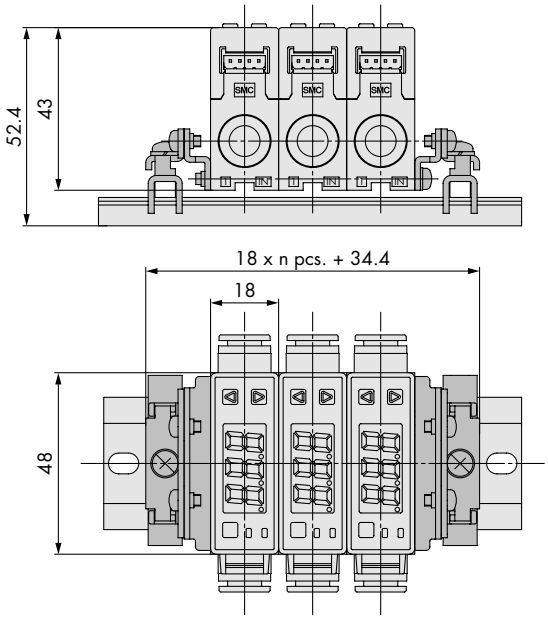

Sensors, Switches

Dimensions PFM5

PFM5□□-C4/C6/C8

(mm)

One-touch fitting Applicable tube O.D.	A	B
ø4 (5/32")	64.2	92.2
ø6	64.6	92.6
ø8 (5/16")	68	96
ø1/4	64.6	92.6

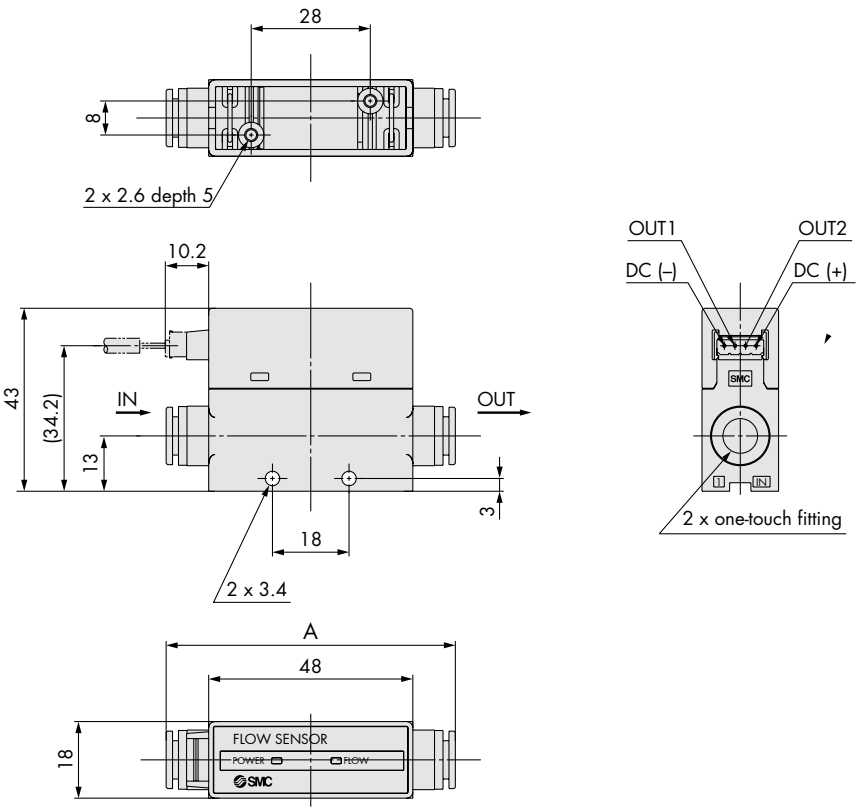

PFM5□S-C4/C6/C8

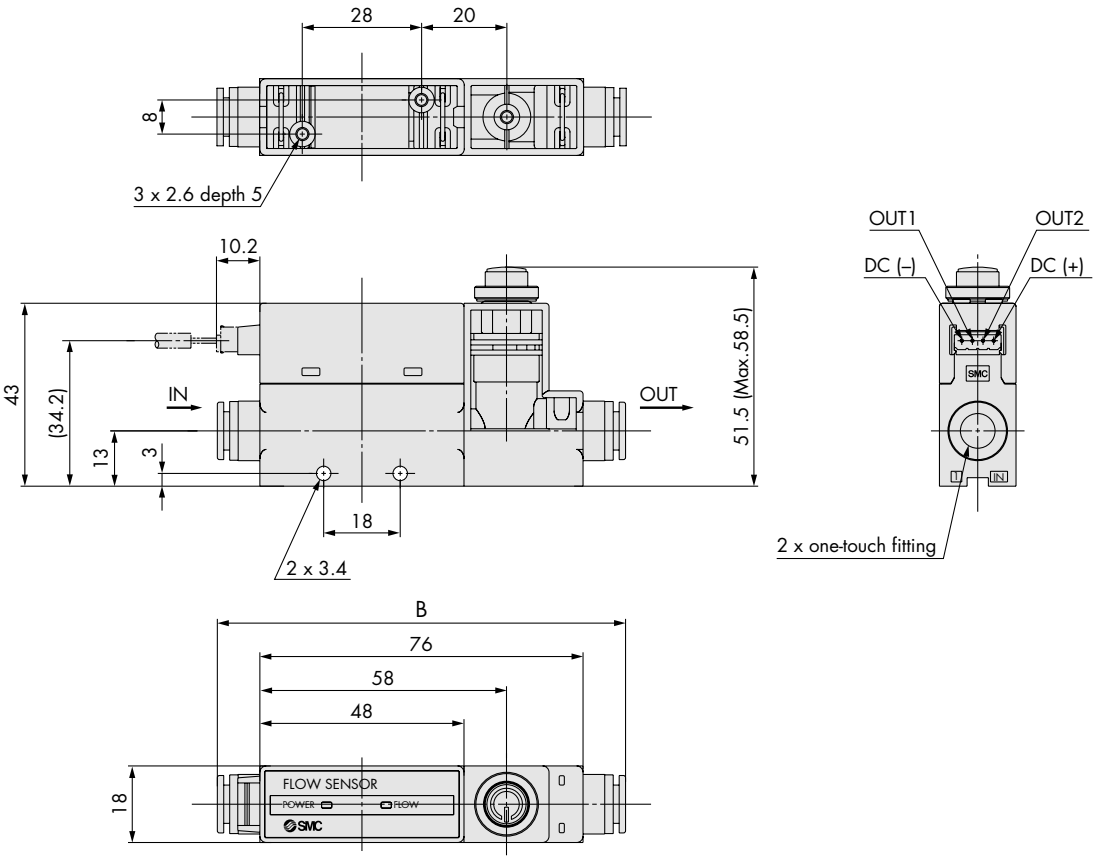

Sensors, Switches

Dimensions

Panel mount / Without flow adjustment valve / Straight

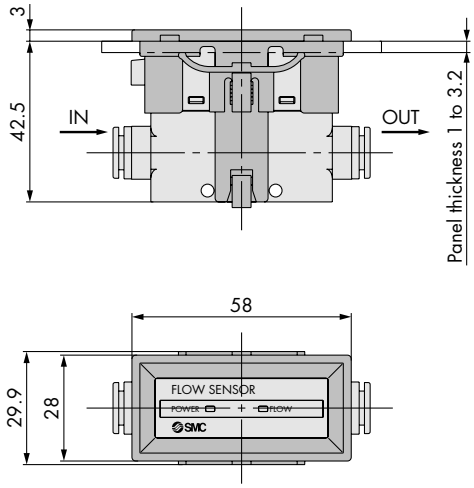

With bracket / Without flow adjustment valve

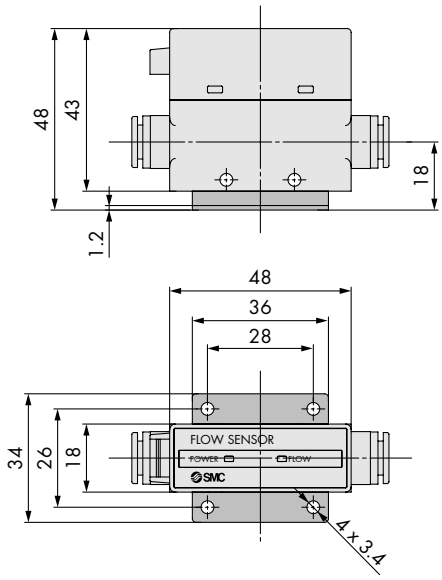

DIN rail mounting

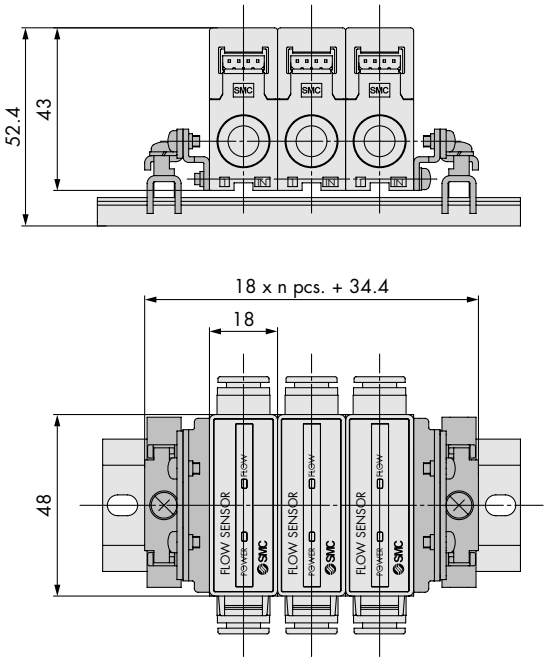

Dimensions PFM3

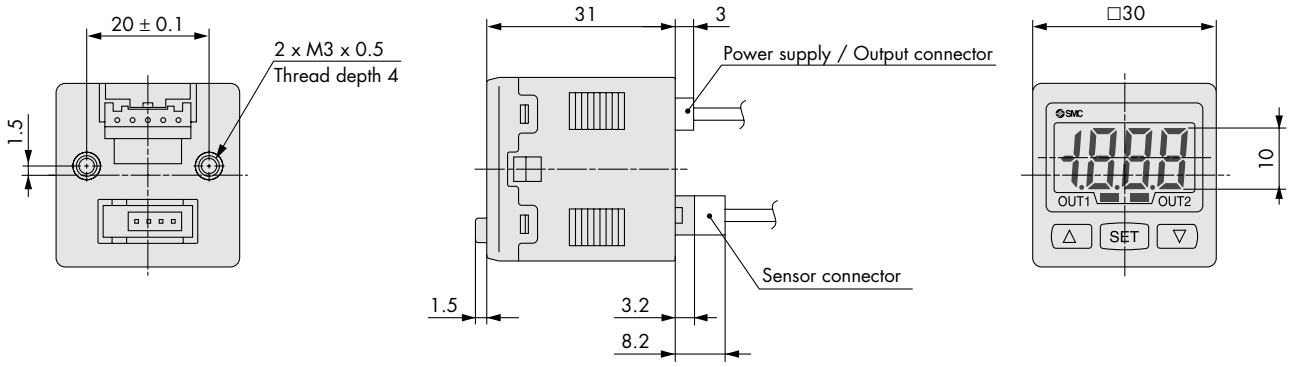

With bracket

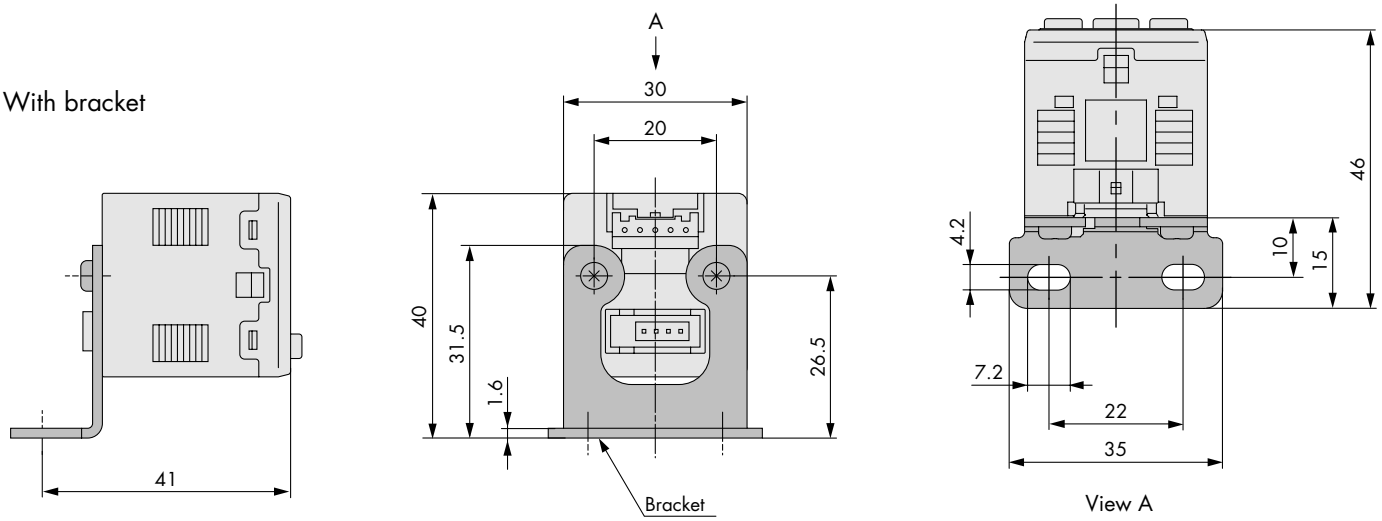

With panel mount adapter

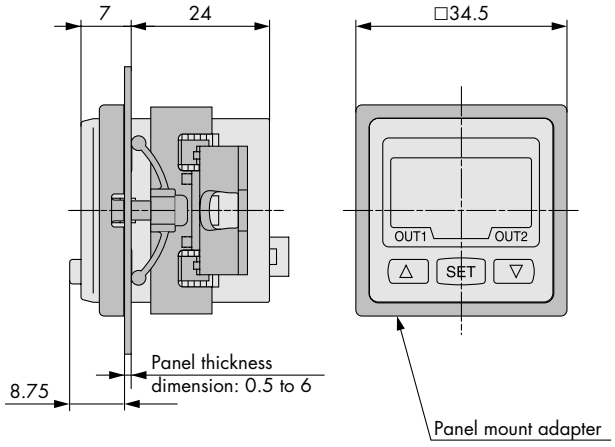

Dimensions PFM3

Panel fitting dimensions

Secure mounting of n (2 or more) switches (horizontal)

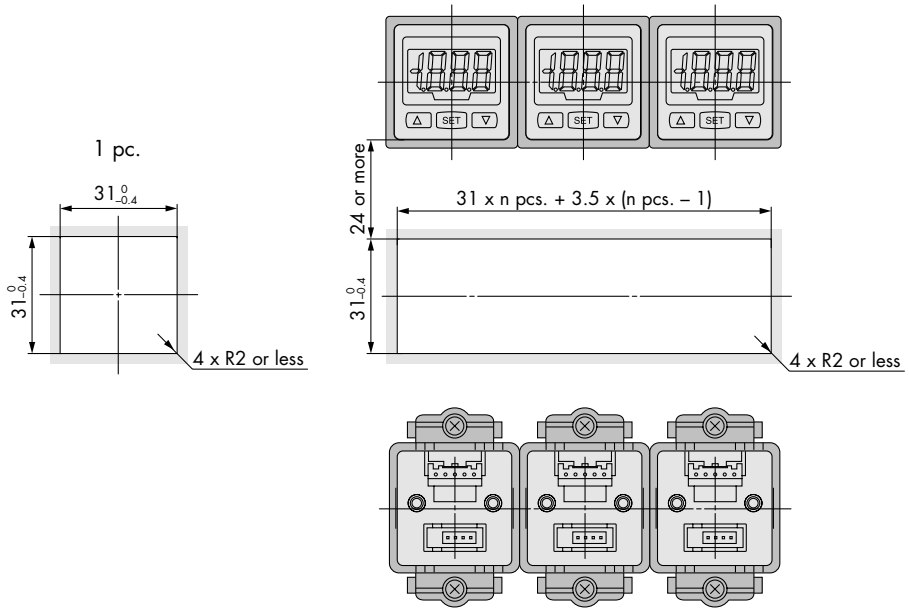

Secure mounting of n (2 or more) switches (vertical)

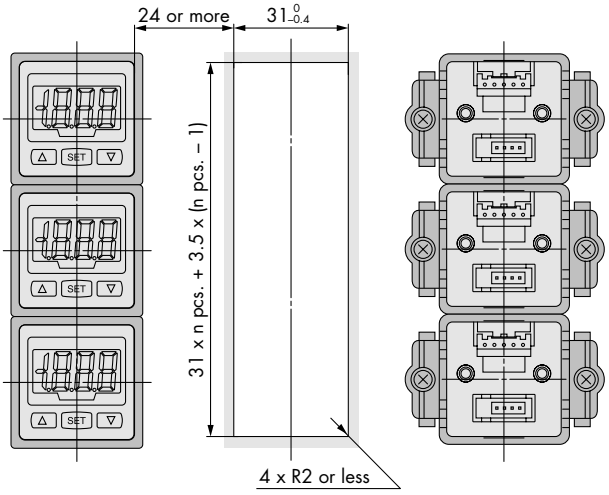

Note) If a bend (R) is used, limit it to R2 or less.

Flow Sensor and Voltage Monitor

Series PFMV

Features

- *Precise suction confirmation of very small workpieces.*
- *Sensor and monitor separation for remote centralitation.*
- *Non-linear voltage flow sensor output.*
- *Fast response.*
- *Reduced piping space.*
- *Support for both vertifcal and hirizontal secure mounting.*
- *Small and light.*
- *A full range of sensors can be covered by one monitor.*



Sensor
Series PFMV5



Voltage Monitor
Series PFMV3

How to order PFMV5

PFMV5 05 – 1

Measurement flow range

05	0.0 to 0.5 ℓ/min
10	0.0 to 1.0 ℓ/min
30	0.0 to 3.0 ℓ/min
05F	–0.5 to 0.5 ℓ/min
10F	–1.0 to 1.0 ℓ/min
30F	–3.0 to 3.0 ℓ/min

Output specification

1	Analogue output (1 to 5 V)

Option/Part No.

Part no.	Stations	Remarks
ZS-36-A1	For 1 station (for single unit)	2 L-type brackets, 2 mounting screws M3 x 15L
ZS-36-A2	For 2 stations	2 L-type brackets, 2 mounting screws M3 x 25L
ZS-36-A3	For 3 stations	2 L-type brackets, 2 mounting screws M3 x 35L
ZS-36-A4	For 4 stations	2 L-type brackets, 2 mounting screws M3 x 45L
ZS-36-A5	For 5 stations	2 L-type brackets, 2 mounting screws M3 x 55L

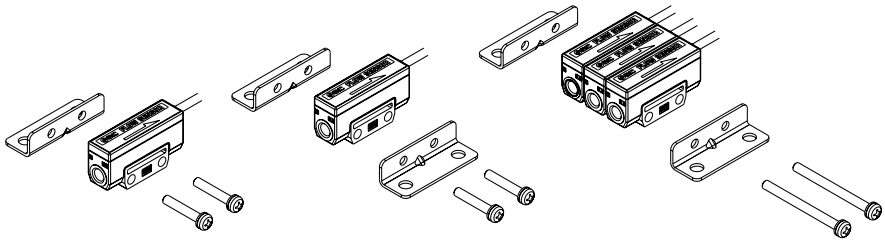

How to order PFMV3

PFMV3 0 0 –M

Type

3	Remote display unit

Input specification

Symbol	Content	Applicable remote type sensor unit
0	Voltage input	PFMV5□(F)-1-□□

Output specification

0	2 NPN outputs + 1 to 5 V output
1	2 NPN outputs + 4 to 20 mA output
2	2 NPN outputs + Auto-shift input
3	2 PNP outputs + 1 to 5 V output
4	2 PNP outputs + 4 to 20 mA output
5	2 PNP outputs + Auto-shift input

Option/Part No.

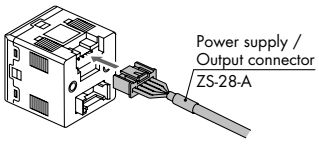

ZS-28-A
Power supply / Output connector (2mm)

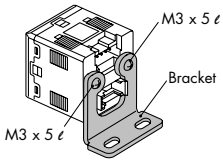

ZS-28-B
Bracket
With M3 x 5ℓ (2pcs.)

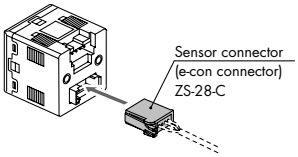

ZS-28-C
Sensor connector
1 pc.

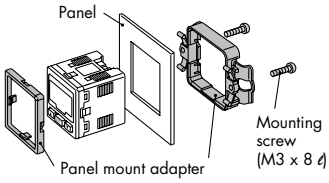

ZS-27-C
Panel mount adapter
With M3 x 8ℓ (2pcs.)

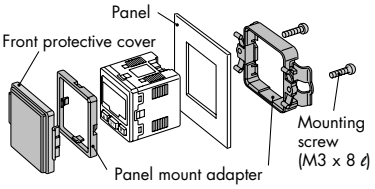

ZS-27-D
Panel mount adapter + front protective cover
With M3 x 8ℓ (2pcs.)

Specifications PFMV5

Model		PFMV505	PFMV510	PFMV530	PFMV505F	PFMV510F	PFMV530F
Applicable fluid		Dry air, N_2 (ISO 8573-1 1.1.2 to 1.1.6: 2001)					
Rated flow range (Flow rate range)		0 to 0.5 ℓ/min	0 to 1 ℓ/min	0 to 3 ℓ/min	–0.5 to 0.5 ℓ/min Note)	–1 to 1 ℓ/min Note)	–3 to 3 ℓ/min Note)
Repeatability		±2 F.S. or less Note)					
Pressure characteristics (Based on 0 kPa)		±2% F.S. or less (0 to 300 kPa) ±5% F.S. or less (–70 to 0 kPa)					
Temperature characteristics (Based on 25°C)		±2% F.S. or less (15 to 35°C) ±5% F.S. or less (0 to 50°C)					
Rated pressure range		–70 kPa to 300 kPa					
Operating pressure range		–100 kPa to 400 kPa					
Proof pressure		500 kPa					
Analogue output (Non-linear output)		Output voltage: 1 to 5 V; output impedance: approx. 1 kΩ					
Response time		5 ms or less (90% response)					
Power supply voltage		12 to 24 VDC ± 10%, Ripple (p-p) ± 10% or less (with polarity protection)					
Current consumption		16 mA or less					
Environ-mental resistance	Enclosure	IP40					
	Fluid temperature	0 to 50°C (with no freezing nor condensation)					
	Operating temperature range	0 to 50°C (with no freezing nor condensation)					
	Withstand voltage	1000 VAC for 1 min. between whole charging part and case					
	Insulation resistance	50 MΩ or more (500 VDC Mega) between whole charging part and case					
	Port size	M5 x 0.8 (Lightening torque: 1 to 1.5 N·m)					
	Wetted parts material	PPS, Si, Au, Stainless steel 316, C3604 (electroless nickel plated)					
Lead wire		Vinyl cabtire cord, 3 cores ø2.6, 0.15 mm^2, 2 m					
Weight		10 g (excluding lead wire)					

Note) Analogue output indicates 3 V when the flow rate is 0. When the flow direction is from IN to OUT, the output is changed to 5 V, and when it's from OUT to IN, the output is changed to 1 V.

Specifications PFMV3

Model	Series PFMV3□□
Applicable sensor	Series PFMV505(F), PFMV510(F), PFMV530(F)
Displayable range	0.70 to 5.10 V: The voltage under 0.7 V is displayed as "LLL" and that of 5.1 V or more is displayed as "HHH".
Settable range	0.70 to 5.10 V
Minimum unit setting	0.01 V
Power supply voltage	12 to 24 VDC (Ripple ± 10% or less) (with polarity protection)
Current consumption	50 mA or less
Hysteresis	Hysteresis mode: Variable, Window comparator mode: Variable
Switch output	NPN or PNP open collector output: 2 outputs Max. load current: 80 mA; max. load voltage 30 VDC (at NPN output), Residual voltage 1 V or less (at load current 80 mA), with short-circuit protection
Response time	Switch output: 2 ms (10 ms, 50 ms, 0.5 s, 1 s can be selected.) Note)
Repeatability	±0.1% F.S. or less, analogue output accuracy: ±0.3% F.S. or less
Analogue output	Output voltage: 1 to 5 VDC; output impedance: approx. 1 kΩ Output current: 4 to 20 mADC; max. load impedance: 600 Ω (at 24 VDC) Min. load impedance: 50 Ω; accuracy: ±1% F.S. or less (relative to display value); response: 0.1 s (90% response or less)
Display accuracy	±0.5% F.S. ± 1 digit or less
Display method	3+1/2-digit, 7-segment LED 2-color display (Red/Green) Updated cycle: 10 times/sec
Status LEDs	OUT1: Illuminates when output is turned ON (Green). OUT2: Illuminates when output is turned ON (Red).
External input (Auto-shift input)	No-voltage input (Reed or Solid state), LOW level input 5 msec or more, LOW level 0.4 V or less
Enclosure	IP40
Operating temperature range	Operating: 0 to 50°C; stored: –10 to 60°C (with no freezing nor condensation)
Withstand voltage	1000 VAC for 1 min. between whole charging part and live part
Temperature characteristics	±0.5% F.S. or less (based on 25°C)
Material	Front and rear cases: PBT
Weight	30 g (without cable); 85 g (with cable)

Note) This is the response when the setting value is set to 90% to a 0 to 100% of step input.

FOR MORE DETAILS
SEE OUR SPECIFIC CATALOGUES,
PRODUCTS CD's OR ONLINE INFORMATION

Dimensions PFMV5

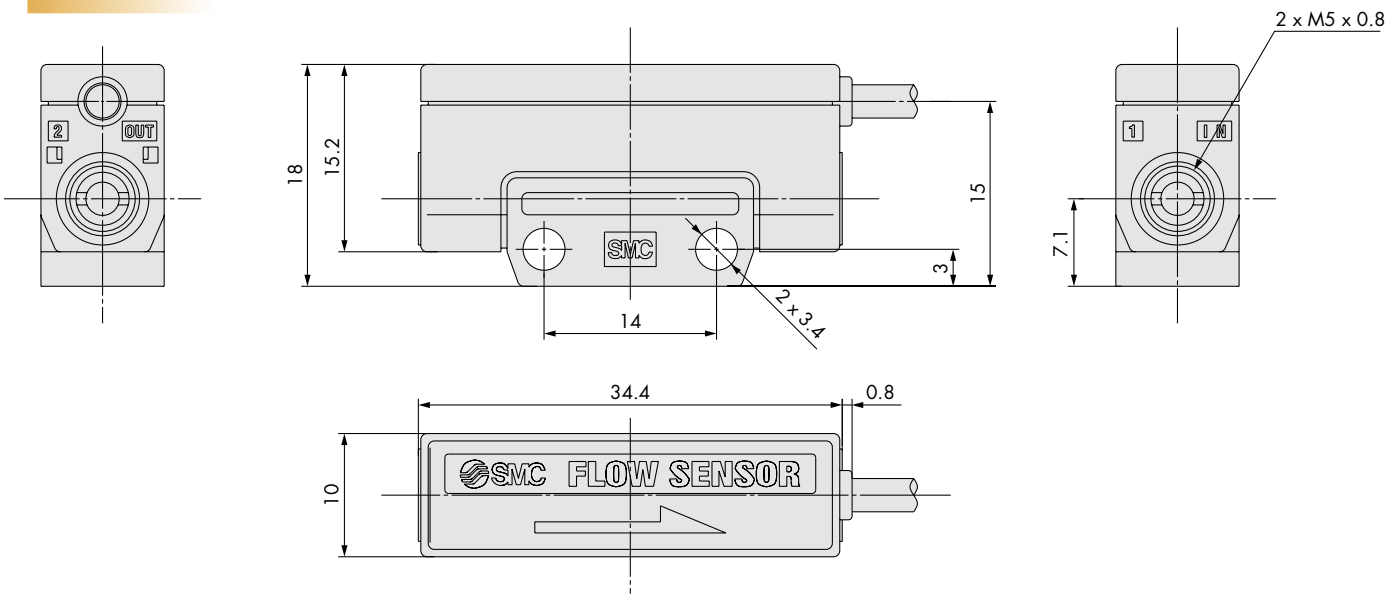

One-side bracket

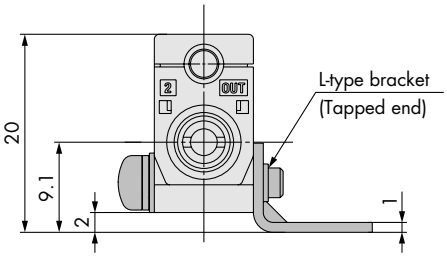

Both-side bracket

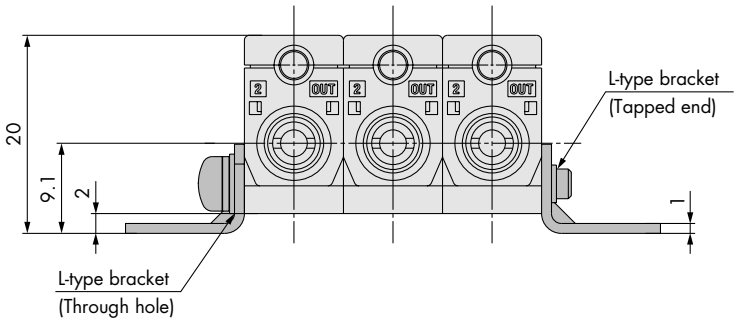

Dimensions PFMV3

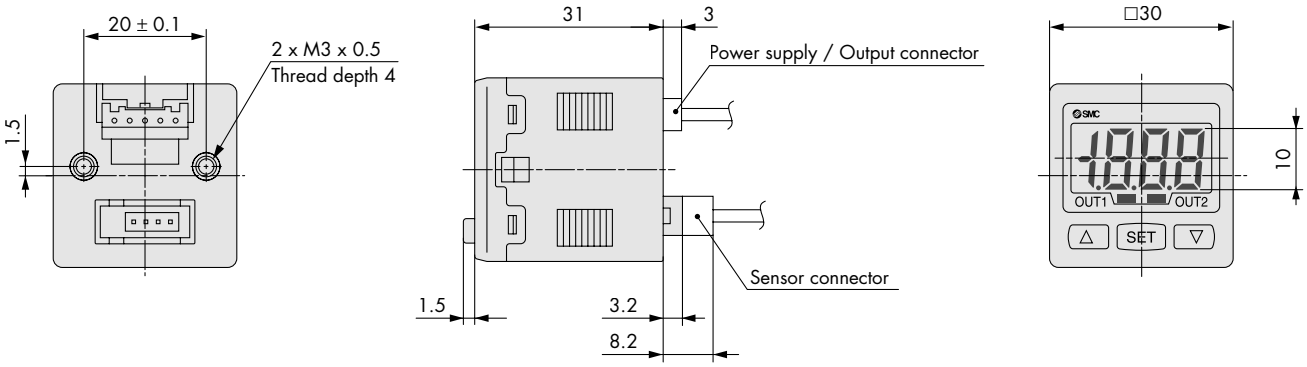

With bracket

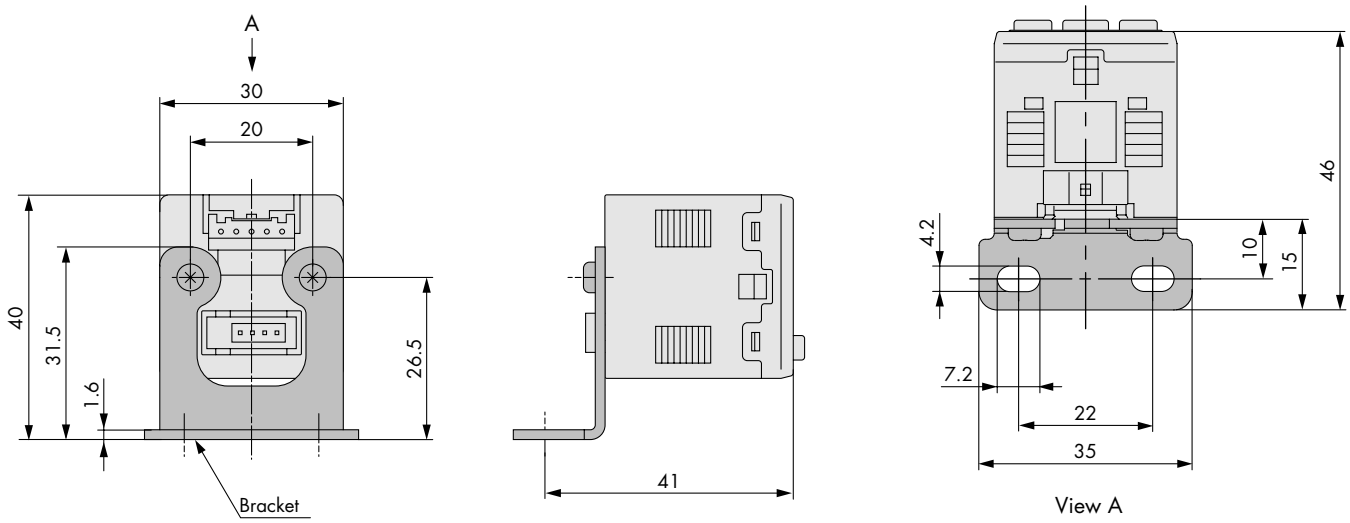

With panel mount adapter

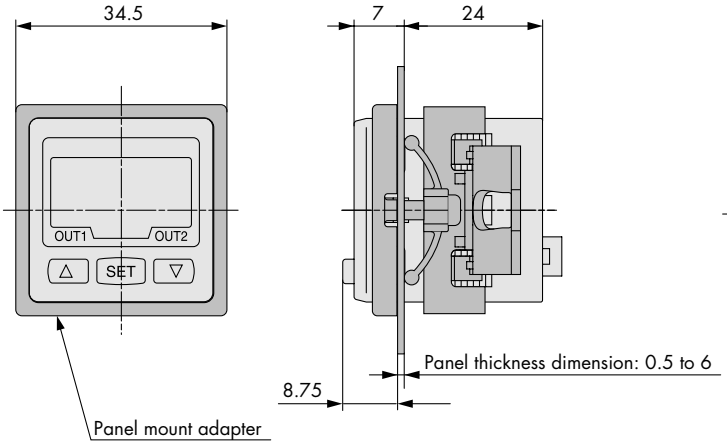

With panel mount adapter + front protective cover

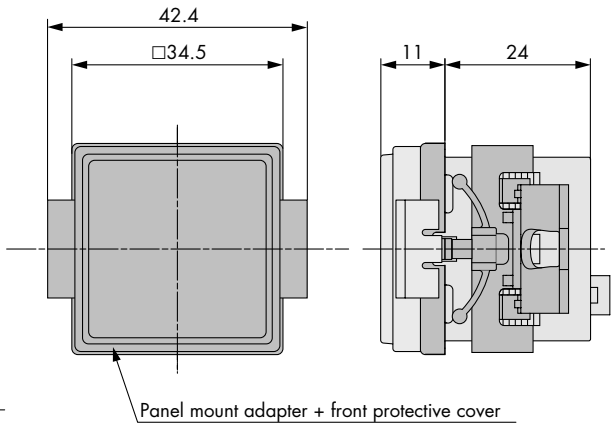

Panel fitting dimensions

Secure mounting of n pcs. (2 or more) switches (Horizontal)

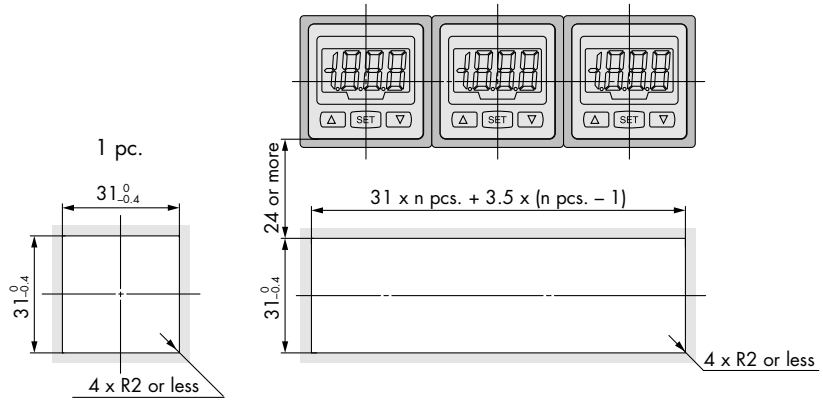

Secure mounting of n pcs. (2 or more) switches (Vertical)

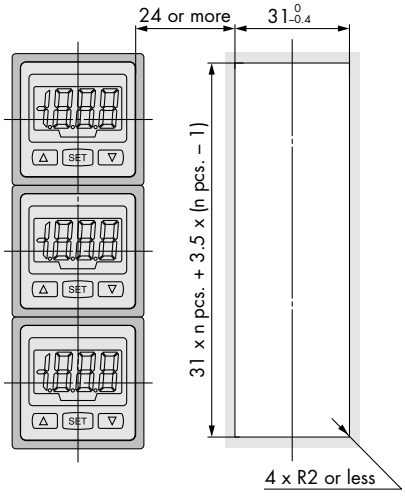

Sensors, Switches

FOR MORE DETAILS
SEE OUR SPECIFIC CATALOGUES,
PRODUCTS CD's OR ONLINE INFORMATION

Digital Flow Switch For Air

Series PF2A

Features

- *Flow switch for air.*
- *Thermal detection has no moving parts and very little resistance to airflow.*
- *Flow ranges from 1 to 500 ℓ/min.*
- *Integrated LED display can show metric or imperial units.*
- *Two independent digital outputs.*
- *Output modes instantaneous flow, accumulated flow and counting pulse.*
- *IP65 splashproof construction.*
- *Display can be rotated for ease of viewing.*



(Integrated display type)

How to Order

Integrated display type

PF2A7 **10** – F **01** – **27**

Flow rate range

10	1 to 10 ℓ/min
50	5 to 50 ℓ/min
11	10 to 100 ℓ/min
21	20 to 200 ℓ/min
51	50 to 500 ℓ/min

Thread type

F	G

Port size

Symbol	Port size	Flow rate (ℓ/min) 10	50	100	200	500	Applicable model
01	1/8	●	●				PF2A710, PF2A750
02	1/4	●	●				
03	3/8			●	●		PF2A711, PF2A721
04	1/2					●	PF2A751

Output specifications

Symbol	Output specifications	Applicable model
27	NPN open collector 2 outputs	PF2A710, PF2A750 PF2A711, PF2A721, PF2A751
67	PNP open collector 2 outputs	PF2A710, PF2A750 PF2A711, PF2A721/PF2A751

Specifications

Model		PF2A710	PF2A750	PF2A711	PF2A721	PF2A751
Measured fluid		Air, Nitrogen				
Flow rate measurement range		0.5 to 10.5 ℓ/min	2.5 to 52.5 ℓ/min	5 to 105 ℓ/min	10 to 210 ℓ/min	25 to 525 ℓ/min
Set flow rate range		0.5 to 10.5ℓ/min	2.5 to 52.5 ℓ/min	5 to 105 ℓ/min	10 to 210 ℓ/min	25 to 525 ℓ/min
Flow rate measuring range		1 to 10 ℓ/min	5 to 50 ℓ/min	10 to 100 ℓ/min	20 to 200 ℓ/min	50 to 500 ℓ/min
Minimum set unit		0.1 ℓ/min	0.5 ℓ/min	1 ℓ/min	2 ℓ/min	5 ℓ/min
Accumulated pulse flow rate exchange value (Pulse width: 50 ms)		0.1 ℓ/pulse	0.5 ℓ/pulse	1 ℓ/pulse	2 ℓ/pulse	5 ℓ/pulse
Display unit Note 1)	Real-time flow rate	ℓ/min, CFM x 10^{-2}		ℓ/min, CFM x 10^{-1}		
	Accumulated flow	ℓ, ft^3 x 10^{-1}				
Operating fluid temperature		0 to 50°C				
Linearity		±5% F.S. or less				
Repeatability		±1% F.S. or less		±2% F.S. or less		
Temperature characteristics		±3% F.S. or less (15 to 35°C, based on 25°C), ±5% F.S. or less (0 to 50°C, based on 25°C)				
Current consumption (No load)		150 mA or less		160 mA or less		170 mA or less
Weight Note 2)		250 g		290 g		
Port size (NPT, G)		1/8, 1/4		3/8		1/2
Detection type		Heater type				
Display		3-digit, 7-segment LED				
Operating pressure range		–50 kPa to 0.5 MPa		–50 kPa to 0.75 MPa		
Proof pressure		1.0 MPa				
Accumulated flow range		0 to 999999 ℓ				
Output specifications Note 3)	Switch output	NPN open collector: Maximum load current: 80 mA; Internal voltage drop: 1 V or less (With load current of 80 mA) Maximum applied voltage: 30 V; Two outputs				
		PNP open collector: Maximum load current: 80 mA Internal voltage drop: 1.5 V or less (With load current of 80 mA); Two outputs				
	Accumulated pulse output	NPN or PNP open collector (same as switch output)				
Indicator light		Lights up when output is ON OUT1: Green; OUT2: Red				
Response time		1sec. or less				
Hysteresis		Hysteresis mode: Variable (can be set from 0), Window comparator mode: 3-digit fixed Note 5)				
Power supply voltage		12 to 24 VDC (Ripple ±10% or less)				
Resistance	Enclosure	IP65				
	Operating temperature range	Operating: 0 to 50°C, Stored: –25 to 85°C (No condensation or freezing)				
	Withstand voltage	1000 VAC for 1 min. between external terminal and case				
	Insulation resistance	50 MΩ (500 VDC) between external terminal and case				
	Noise resistance	1000 Vp-p, Pulse width 1 µs, Rise time 1 ns				

Note 1) Flow rate display can be switched between the basic condition of 0°C, 101.3 kPa and the standard condition (ANR) of 20°C, 101.3 kPa, and 65% RH.
Note 2) Without lead wire.
Note 3) Switch output and accumulated pulse output can be selected during initial setting.
Note 4) Window comparator mode — Since hysteresis will reach 3 digits, keep P_1 and P_2 or n_1 and n_2 apart by 7 digits or more. (In case of output OUT2, n_1, 2 to be n_3, 4 and P_1, 2 to be P_3, 4.)

Dimensions: Integrated Display Type for Air

PF2A710/750

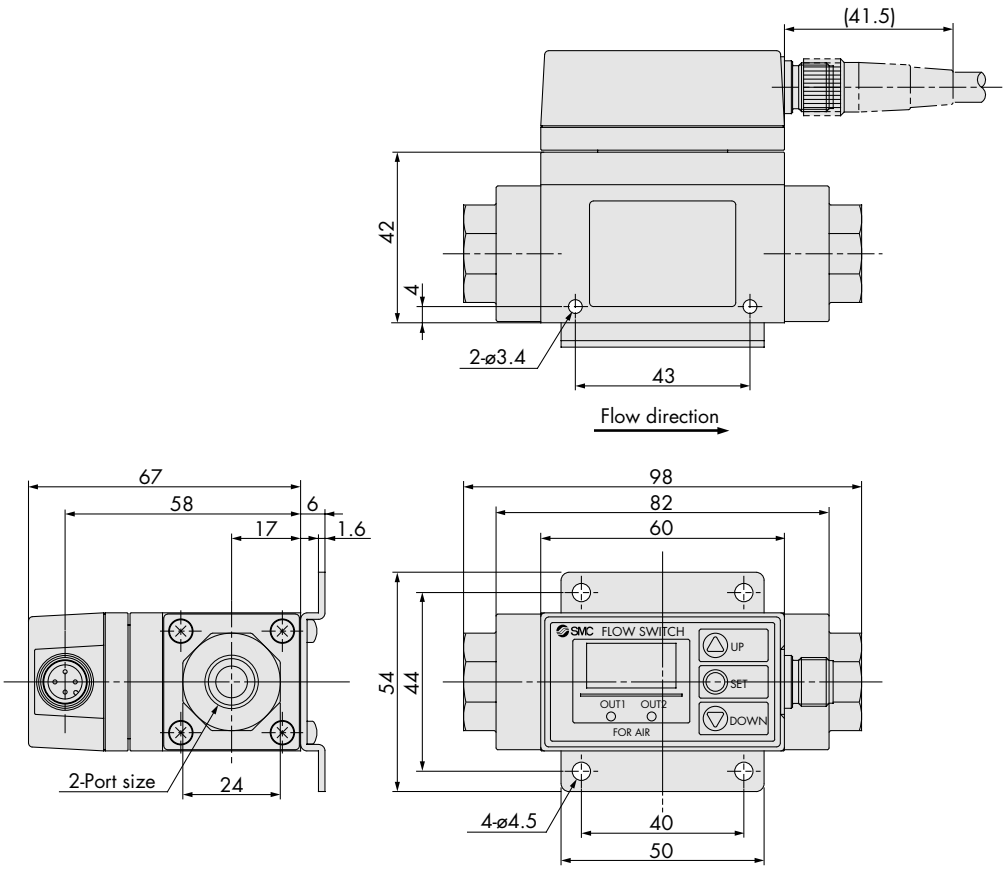

PF2A711/721/751

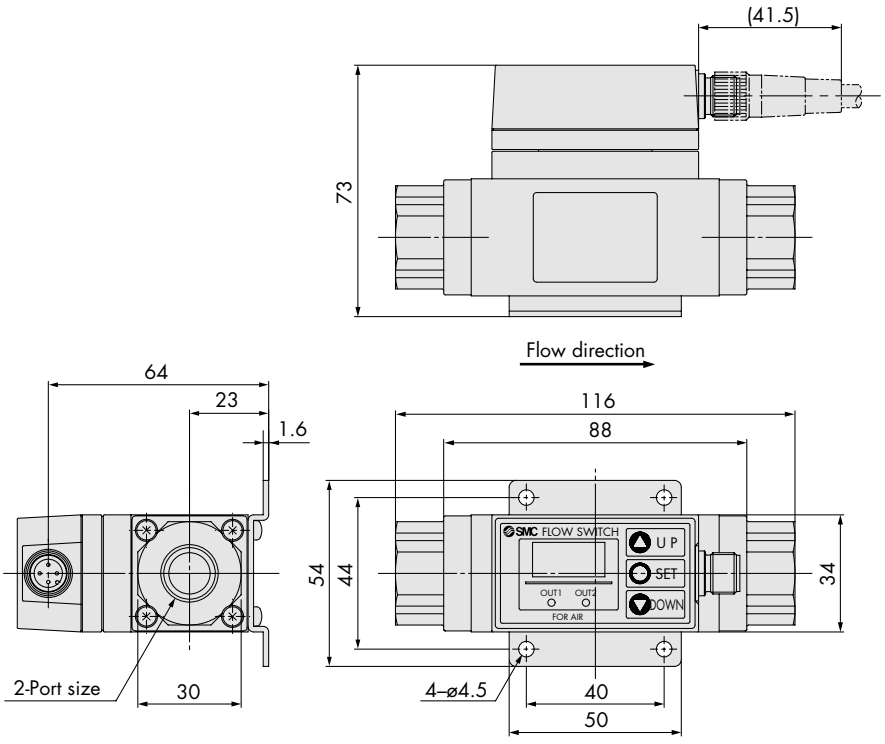

Connector pin numbers

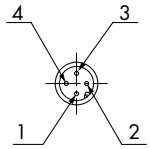

Pin no.	Pin description
1	DC (+)
2	OUT2
3	DC (–)
4	OUT1

Digital Flow Switch For Air

Series PF2A

Features

- *Flow switch for air*
- *Thermal detection has no moving parts*
- *Very little resistance to airflow*
- *Flow ranges from 1 to 500 l/min*
- *Output for remote display, optional analogue output*
- *IP65 splashproof construction*



(Remote display sensor unit)

How to Order

Remote type Display unit

PF2A5 10 – F 01 –

Flow rate range

10	1 to 10 ℓ/min
50	5 to 50 ℓ/min
11	10 to 100 ℓ/min
21	20 to 200 ℓ/min
51	50 to 500 ℓ/min

Thread type

F	G

Port size

Symbol	Port size	Flow rate (ℓ/min) 10	50	100	200	500	Applicable model
01	1/8	●	●				PF2A510/550
02	1/4	●	●				
03	3/8			●	●		PF2A511/521
04	1/2					●	PF2A551

Output specifications

Nil	Output for display unit
1	Output for display unit + analog output (1 to 5 V)
2	Output for display unit + analog output (4 to 20 mA)

Specifications

Model		PF2A510	PF2A550	PF2A511	PF2A521	PF2A551
Measured fluid		Air, Nitrogen				
Detection type		Heater type				
Flow rate measuring range		1 to 10 ℓ/min	5 to 50 ℓ/min	10 to 100 ℓ/min	20 to 200 ℓ/min	50 to 500 ℓ/min
Operating pressure range		–50 kPa to 0.5 MPa		–50 kPa to 0.75 MPa		
Proof pressure		1.0 MPa				
Operating fluid temperature		0 to 50°C				
Linearity Note 1)		±5% F.S. or less				
Repeatability Note 1)		±1% F.S. or less				
Temperature characteristics		±2% F.S. or less (15 to 35°C, based on 25°C) ±3% F.S. or less (0 to 50°C, based on 25°C)				
Output specifications Note 2)	Output for display unit	Analogue voltage output (Non-linear) output impedance 1 kΩ output for display unit PF2A3□□				
	Analog output	Voltage output 1 to 5 V within the flow rate range Linearity: ±5% F.S. or less; allowable load resistance: 100 kΩ or more.				
		Current output 4 to 20 mA within the flow rate range Linearity: ±5% F.S. or less; allowable load resistance: 300Ω or less with 12 VDC, 600Ω or less with 24 VDC				
Power supply voltage		12 to 24 VDC (Ripple ±10% or less)				
Current consumption (No load)		100 mA or less				110 mA or less
Resistance	Enclosure	IP65				
	Operating temperature range	Operating: 0 to 50°C, Stored: –25 to 85°C (No condensation or freezing)				
	Withstand voltage	1000 VAC for 1 min. between external terminal and case				
	Insulation resistance	50 MΩ (500 VDC) between external terminal and case				
	Noise resistance	1000 Vp-p, Pulse width 1 µs, Rise time 1 ns				
Weight Note 3)		200 g		240 g		
Port size (G)		1/8, 1/4		3/8		1/2

Note 1) The system accuracy when combined with PF2A3□□.
Note 2) Output system can be selected during initial setting.
Note 3) Without lead wire. (Add 20 g for the types of analog output whether voltage or current output selected.)
Note 4) Flow rate unit measured under the following conditions: 0°C and 101.3 kPa.

Dimensions: Remote Type Sensor Unit for Air

PF2A510/550

(mm)

Output specifications	A	B
Pulse output only	42	62
Pulse output + Analog output	52	72

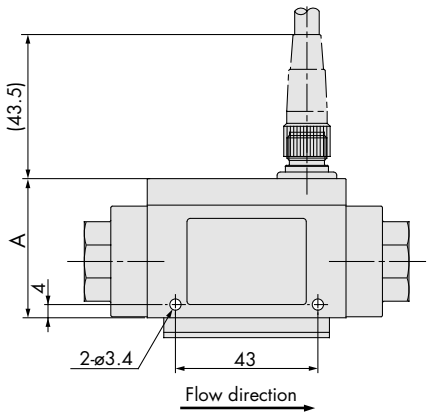

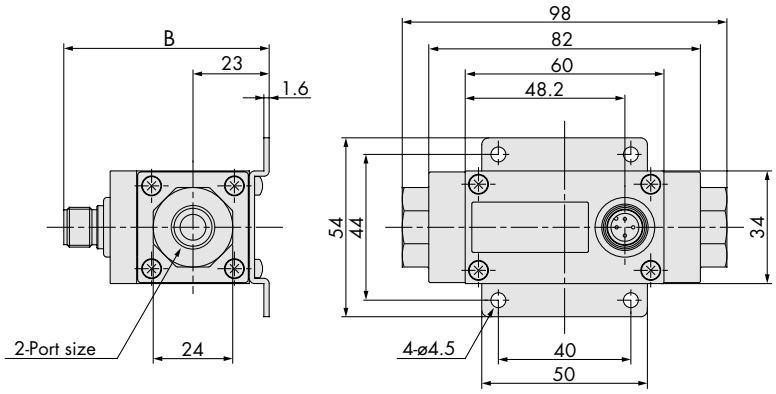

PF2A511/521/551

(mm)

Output specifications	A	B
Pulse output only	48	62
Pulse output + Analog output	58	72

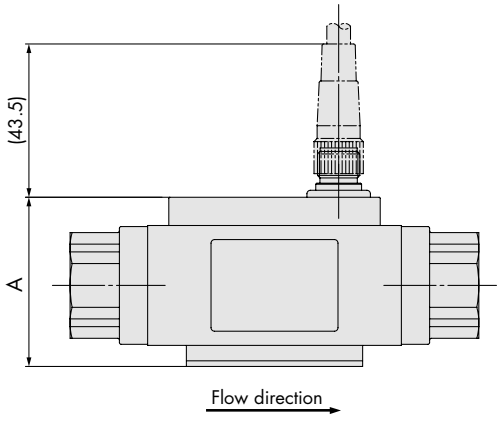

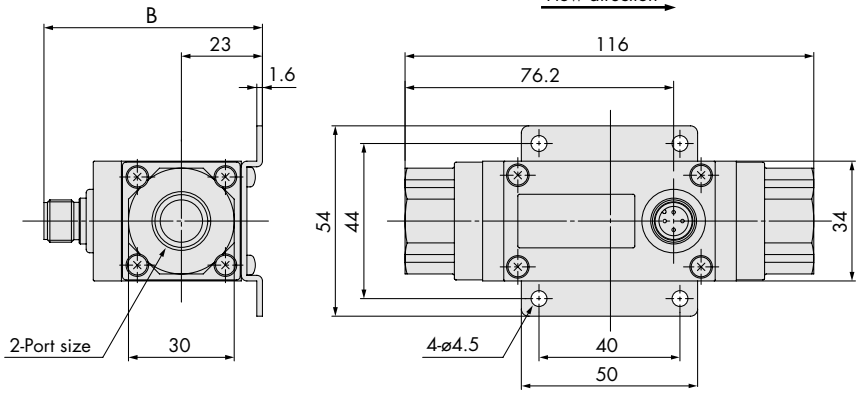

Wiring

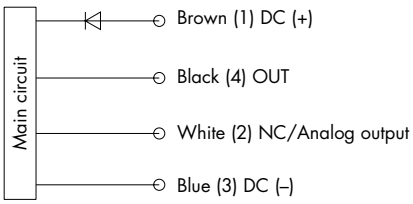

* Use this sensor by connecting to SMC remote type display unit Series PF2A3□□.

Connector pin numbers

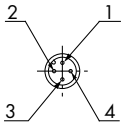

Pin no.	Pin description
1	DC (+)
2	NC/Analog output
3	DC (–)
4	OUT

Digital Flow Switch For Air

Series PF2A



Features

- *Displays flow information*
- *Works with remote sensor units*
- *Panel mounting construction*
- *Clear LED indication*
- *Two independent digital outputs*
- *Output modes instantaneous flow, total flow and counting pulse*
- *Integrated LED display can show metric or imperial units*

How to Order

Remote type Display unit

PF2A3 0 0 – A

Flow rate range

Symbol	Flow rate range	Type for sensor unit
0	1 to 10 ℓ/min	PF2A510
	5 to 50 ℓ/min	PF2A550
1	10 to 100 ℓ/min	PF2A511
	20 to 200 ℓ/min	PF2A521
	50 to 500 ℓ/min	PF2A551

Output specifications

Symbol	Output specifications	Applicable model
0	NPN open collector 2 outputs	PF2A300/310
1	PNP open collector 2 outputs	PF2A301/311

Mounting

A	Panel mounting

Specifications

Model		PF2A300/301		PF2A310/311		
Flow rate measurement range Note 1)		0.5 to 10.5 ℓ/min	2.5 to 52.5 ℓ/min	5 to 105 ℓ/min	10 to 210 ℓ/min	25 to 525 ℓ/min
Set flow rate range Note 1)		0.5 to 10.5 ℓ/min	2.5 to 52.5 ℓ/min	5 to 105 ℓ/min	10 to 210 ℓ/min	25 to 525 ℓ/min
Minimum set unit Note 1)		0.1 ℓ/min	0.5 ℓ/min	1 ℓ/min	2 ℓ/min	5 ℓ/min
Accumulated pulse flow rate exchange value (Pluse width: 50 ms) Note 1)		0.1 ℓ/pulse	0.5 ℓ/pulse	1 ℓ/pulse	2 ℓ/pulse	5 ℓ/pulse
Display unit Note 2)	Real-time flow rate	ℓ/min, CFM x 10^{-2}		ℓ/min, CFM x 10^{-1}		
	Accumulated flow	ℓ, ft^3 x 10^{-1}				
Accumulated flow range		0 to 999999 ℓ				
Linearity Note 3)		±5% F.S. or less				
Repeatability Note 3)		±1% F.S. or less				
Temperature characteristics		±1% F.S. or less (15 to 35°C based on 25°C) ±2% F.S. or less (0 to 50°C based on 25°C)				
Current consumption		50 mA or less		60 mA or less		
Weight		45 g				
Output specifications Note 4)	Switch output	NPN open collector (PF2A300, PF2A310)		Maximum load current: 80 mA Internal voltage drop: 1 V or less (With load current of 80 mA) Maximum applied voltage: 30 V 2 outputs		
		PNP open collector (PF2A301, PF2A311)		Maximum load current: 80 mA Internal voltage drop: 1.5 V or less (With load current of 80 mA) 2 outputs		
	Accumulated pulse output	NPN or PNP open collector (same as switch output)				
Display		3-digit, 7-segment LED				
Indicator light		Lights up when output is ON OUT1: Green; OUT2: Red				
Power supply voltage		12 to 24 VDC (Ripple ±10% or less)				
Response time		1 sec. or less				
Hysteresis		Hysteresis mode: Variable (can be set from 0), Window comparator mode: Fixed (3 digits) Note 5)				
Resistance	Enclosure	IP40				
	Operating temperature range	Operating: 0 to 50°C, Stored: –25 to 85°C (No condensation or freezing)				
	Withstand voltage	1000 VAC for 1 min. between external terminal and case				
	Insulation resistance	50 MΩ (500 VDC) between external terminal and case				
	Noise resistance	1000 Vp-p, Pulse width 1 µs, Rise time 1 ns				

Note 1) The flow rate measurement range can be modified depending on the setting.
Note 2) Flow rate display can be switched between the basic condition of 0°C, 101.3 kPa and the standard condition (ANR) of 20 C, 101.3 kPa, and 65% RH.
Note 3) The system accuracy when combined with PF2A5□□.
Note 4) Switch output and accumulated pulse output can be selected during initial setting.
Note 5) Window comparator mode — Since hysteresis will reach 3 digits, keep P_1 and P_2 or n_1 and n_2 apart by 7 digits or more. (In case of output OUT2, n_1, 2 to be n_3, 4 and P_1, 2 to be P_3, 4.)

Dimensions: Remote Type Display Unit for Air

PF2A3□□-A
Panel mounting type

Panel fitting dimensions

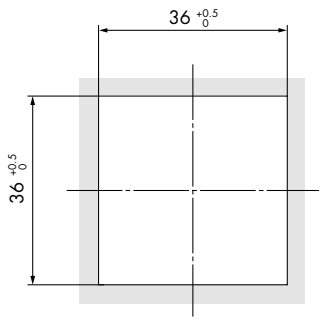

* The applicable panel thickness is 1 to 3.2 mm.

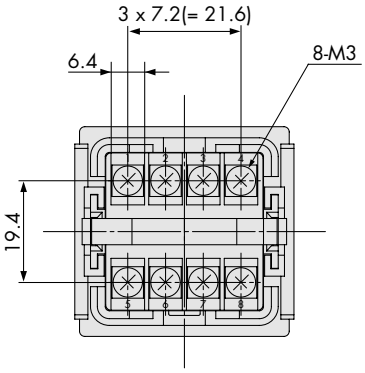

View A

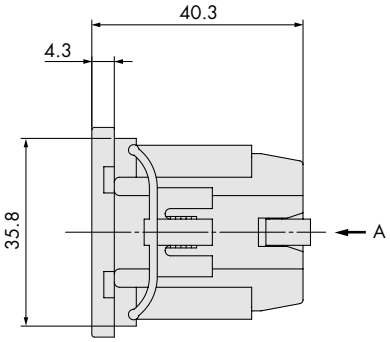

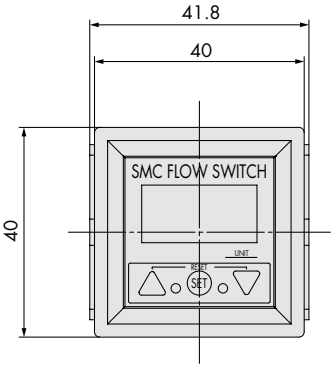

Terminal block number

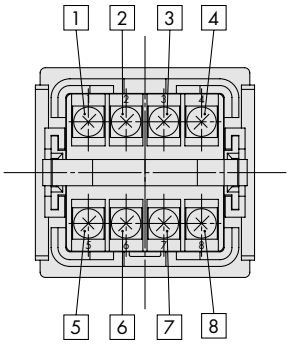

Analog output

1 to 5 VDC

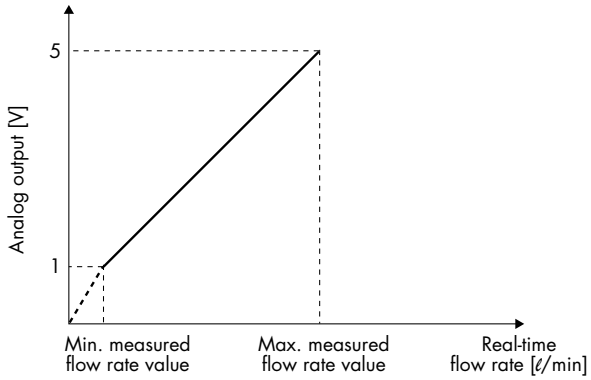

4 to 20 mADC

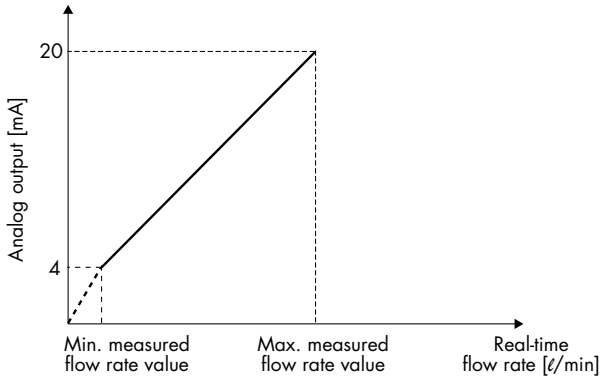

Part no.	Basic condition		Standard condition	
	Minimum measured flow rate value [ℓ/min]		Minimum measured flow rate value [ℓ/min]	
PF2A510-□-1	1	10	1.1	10.7
PF2A550-□-1	5	50	5.4	53.5
PF2A511-□-1	10	100	11	107
PF2A521-□-1	20	200	21	214
PF2A551-□-1	50	500	54	535

Part no.	Basic condition		Standard condition	
	Minimum measured flow rate value [ℓ/min]		Minimum measured flow rate value [ℓ/min]	
PF2A510-□-2	1	10	1.1	10.7
PF2A550-□-2	5	50	5.4	53.5
PF2A511-□-2	10	100	11	107
PF2A521-□-2	20	200	21	214
PF2A551-□-2	50	500	54	535

FOR MORE DETAILS
SEE OUR SPECIFIC CATALOGUES,
PRODUCTS CD's OR ONLINE INFORMATION

Digital Flow Switch, Large Flow Type For Air

Series PF2A



Features

- *High volume flow switch for air*
- *Thermal detection has no moving parts*
- *Very little resistance to airflow*
- *Flow ranges from 150 to 12000 l/min*
- *Integrated LED display can show metric or imperial units*
- *Digital and analogue outputs*
- *Digital output gives instantaneous flow, accumulated flow or counting pulse*
- *IP65 splashproof construction*
- *Display can be rotated for ease of viewing*

How to Order

Integrated display type

PF2A7 03 H – F 10 – 68

Flow rate range

03	150 to 3000 ℓ/min
06	300 to 6000 ℓ/min
12	600 to 12000 ℓ/min

High flow type

Port specifications

F	G

Port size

Symbol	Port size	Flow rate (ℓ/min) 3000	6000	12000	Applicable model
10	1	●			PF2A703H
14	1 1/2		●		PF2A706H
20	2			●	PF2A712H

Output specifications

28	NPN open collector 1 output + Analog output (1 to 5 V)
29	NPN open collector 1 output + Analog output (4 to 20 mA)
68	PNP open collector 1 output + Analog output (1 to 5 V)
69	PNP open collector 1 output + Analog output (4 to 20 mA)

* Switching of switch output and accumulated pulse output is possible with NPN or PNP open collector outputs.

Specifications

Model		PF2A703H	PF2A706H	PF2A712H
Measured fluid		Dry air		
Detection type		Heater type		
Flow rate measuring range Note 1)		150 to 3000 ℓ/min	300 to 6000 ℓ/min	600 to 12000 ℓ/min
Minimum setting unit Note 1)		5 ℓ/min	10 ℓ/min	
Display unit	Real-time flow rate	ℓ/min, CFM		
	Accumulated flow	ℓ, m^3, $m^3 \times 10^3$, ft^3, $ft^3 \times 10^3$, $ft^3 \times 10^6$		
Operating pressure range		0.1 to 1.5 MPa		
Proof pressure		2.25 MPa		
Pressure loss		20 kPa (at maximum flow rate)		
Accumulated flow range		0 to 9,999,999,999 ℓ		
Linearity Note 2)		±1.5% F.S. or less (0.7 MPa, at 20°C)		
Repeatability		±1.0% F.S. or less (0.7 MPa, at 20°C), ±3.0% of F.S. or less in case of analog output		
Pressure characteristics		±1.5% F.S. or less (0.1 to 1.5 MPa, based on 0.7 MPa)		
Temperature characteristics		±2.0% F.S. or less (0 to 50°C, based on 25°C)		
Output specifications	Switch output Note 3)	NPN open collector Max. load current: 80 mA; Max. applied voltage: 30 V; Internal voltage drop: 1 V or less (With load current of 80 mA)		
		PNP open collector Max. load current: 80 mA; Internal voltage drop: 1.5 V or less (With load current of 80 mA)		
	Accumulated Note 3) pulse output	NPN or PNP open collector	Flow rate per pulse: 100 ℓ/pulse, 10.0 ft^3/pulse Pulse width: 50 msec	
	Analogue output Note 4)	Output voltage: 1 to 5 V; Load impedance: 100 kΩ or more		
		Output current: 4 to 20 mA; Load impedance: 250 Ω or less		
Response time		1 sec. or less		
Hysteresis		Hysteresis mode: Variable (can be set from 0); Window comparator mode: (can be set from 0 to 3% F.S.)		
Power supply voltage		24 VDC (Ripple ±10% or less)		
Current consumption		150 mA or less		
Resistance	Enclosure	IP65		
	Operating temperature range	0 to 50°C (No condensation)		
	Withstand voltage	1000 VAC for 1 min. between external terminal and case		
	Insulation resistance	50 MΩ (500 VDC) between external terminal and case		
	Noise resistance	1000 Vp-p, Pulse width 1 µs, Rise time 1 ns		
Weight		1.1 kg (Without lead wire)	1.3 kg (Without lead wire)	2.0 kg (Without lead wire)
Port size		1	1 1/2	2

Note 1) Flow rate display can be switched between the basic condition of 0°C, 101.3 kPa and the standard condition (ANR) of 20 C, 101.3 kPa, and 65% RH.
Note 2) The high flow rate type is CE marked; however, the linearity with applied noise is ±5% F.S. or less.
Note 3) Switch output and accumulated pulse output selections are made using the button controls.
Note 4) The analog output operates only for real-time flow rate, and does not operate for accumulated flow.

Dimensions

PF2A703H/706H/712H

Connector pin numbers

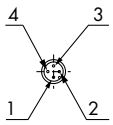

Pin no.	Pin description
1	DC (+)
2	Analog output
3	DC (–)
4	OUT1

Model	A	B	C	D	E	F	G	H	I	J
PF2A703H	55	160	40	92	67	55	1"	36	M5 x 0.8	8
PF2A706H	65	180	45	104	79	65	1 1/2"	46	M6 x 1	9
PF2A712H	75	220	55	114	89	75	2"	56	M6 x 1	9

Analogue output

1 to 5 VDC

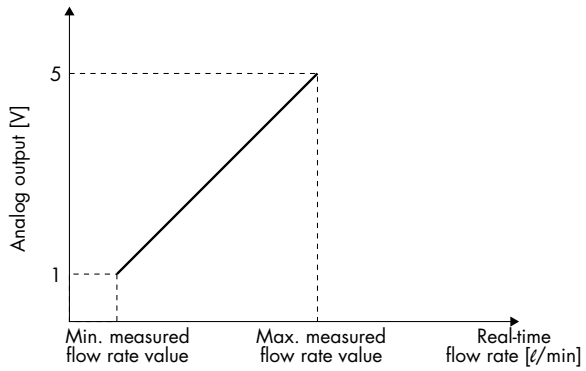

4 to 20 mADC

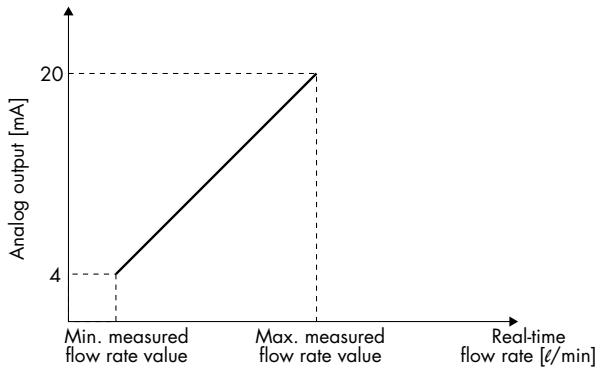

Part no.	Minimum measured flow rate value [ℓ/min]	Maximum measured flow rate value [ℓ/min]
PF2A703H-□-28 PF2A703H-□-68	150	3000
PF2A706H-□-28 PF2A706H-□-68	300	6000
PF2A712H-□-28 PF2A712H-□-68	600	12000

Part no.	Minimum measured flow rate value [ℓ/min]	Maximum measured flow rate value [ℓ/min]
PF2A703H-□-29 PF2A703H-□-69	150	3000
PF2A706H-□-29 PF2A706H-□-69	300	6000
PF2A712H-□-29 PF2A712H-□-69	600	12000

FOR MORE DETAILS
SEE OUR SPECIFIC CATALOGUES,
PRODUCTS CD's OR ONLINE INFORMATION

Digital Flow Switch For Water

Series PF2W

Features

- *Flow switch for water*
- *Karmann vortex detection method*
- *No moving parts inside the unit*
- *Very little resistance to water flow*
- *Flow ranges from 0.5 to 100 l/min*
- *Integrated LED display can show metric or imperial units*
- *Two independent digital outputs*
- *Output modes instantaneous flow, accumulated flow and counting pulse*
- *IP65 splashproof construction*
- *Display can be rotated for ease of viewing*



(Integrated display type)

How to Order

Integrated display type

PF2W7 20 – F 03 – 27

Flow rate range

04	0.5 to 4 ℓ/min
20	2 to 16 ℓ/min
40	5 to 40 ℓ/min
11	10 to 100 ℓ/min

Thread type

F	G

Port size

Symbol	Port size	Flow rate (ℓ/min) 4	16	40	100	Applicable model
03	3/8	●	●			PF2W704, PF2W720
04	1/2		●	●		PF2W720, PF2W740
06	3/4			●	●	PF2W740, PF2W711
10	1				●	PF2W711

Output specifications

27	NPN open collector 2 outputs
67	PNP open collector 2 outputs

Specifications

Model		PF2W704	PF2W720	PF2W740	PF2W711
Measured fluid		Water			
Flow rate measurement range		0.35 to 4.5 ℓ/min	1.7 to 17.0 ℓ/min	3.5 to 45 ℓ/min	7 to 110 ℓ/min
Set flow rate range		0.35 to 4.5 ℓ/min	1.7 to 17.0 ℓ/min	3.5 to 45 ℓ/min	7 to 110 ℓ/min
Flow rate measuring range		0.5 to 4 ℓ/min	2 to 16 ℓ/min	5 to 40 ℓ/min	10 to 100 ℓ/min
Minimum set unit		0.05 ℓ/min	0.1 ℓ/min	0.5 ℓ/min	1 ℓ/min
Accumulated pulse flow rate exchange value (Pulse width: 50 ms)		0.05 ℓ/pulse	0.1 ℓ/pulse	0.5 ℓ/pulse	1 ℓ/pulse
Linearity		±5% F.S. or less			±3% F.S. or less
Repeatability		±3% F.S. or less			±2% F.S. or less
Temperature characteristics Note 1)		±5% F.S. or less (0 to 50°C, based on 25°C)			
Current consumption (No load)		70 mA or less			80 mA or less
Weight		460 g	520 g	700 g	1150 g
Port size		3/8	3/8, 1/2	1/2, 3/4	3/4, 1
Detection type		Karmann vortex			
Display		3-digit, 7-segment LED			
Display unit	Real-time flow rate	ℓ/min, gal (US)/min			
	Accumulated flow	ℓ, gal (US)			
Operating pressure range		0 to 1 MPa			
Proof pressure		1.5 MPa			
Accumulated flow range		0 to 999999 ℓ			
Ambient temperature range		Operating: 0 to 50°C, Stored: –25 to 85°C (No condensation or freezing)			
Output specifications Note 2)	Switch output	NPN open collector	Maximum load current: 80 mA; Internal voltage drop: 1 V or less (With load current of 80 mA) Maximum applied voltage: 30 V; 2 outputs		
		PNP open collector	Maximum load current: 80 mA Internal voltage drop: 1.5 V or less (With load current of 80 mA); 2 outputs		
	Accumulated pulse output	NPN or PNP open collector (same as switch output)			
Indicator light		Lights up when output is ON, OUT1: Green; OUT2: Red			
Response time		1 sec. or less			
Hysteresis		Hysteresis mode: Variable (can be set from 0), Window comparator mode: 3-digit fixed Note 3)			
Power supply voltage		12 to 24 VDC (Ripple ±10% or less)			
Resistance	Enclosure	IP65			
	Operating temperature range	0 to 50°C			
	Withstand voltage	1000 VAC for 1 min. between external terminal and case			
	Insulation resistance	50 MΩ (500 VDC) between external terminal and case			
	Noise resistance	1000 Vp-p, Pulse width 1 µs, Rise time 1 ns			

Note 1) In the case of PF2W711, ±3% of F.S. or less (15°C to 35°C, based on 25°C).
Note 2) Switch output and accumulated pulse output can be selected during initial setting.
Note 3) Window comparator mode — Since hysteresis will reach 3 digits, keep P_1 and P_2 or n_1 and n_2 apart by 7 digits or more. The minimum setting unit is 1 digit. (Refer to the table above.)
(In case of output OUT2, n_1, 2 to be n_3, 4 and P_1, 2 to be P_3, 4.)

Dimensions: Integrated Display Type for Water

PF2W704, PF2W720

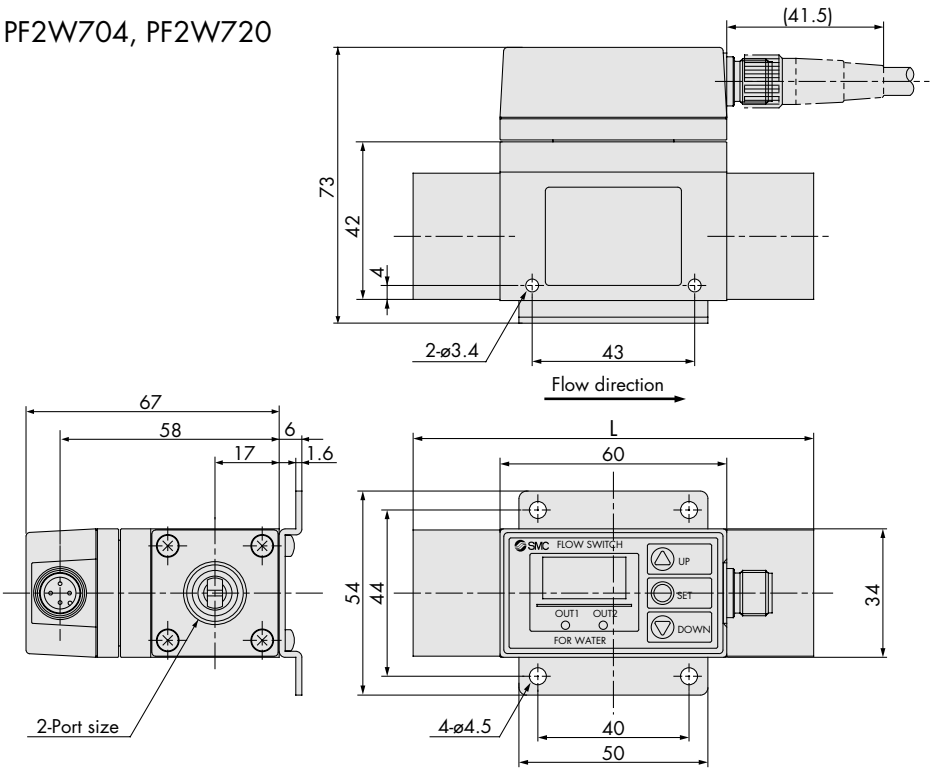

Model	L dimension
PF2W704	100
PF2W720	106

Connector pin numbers

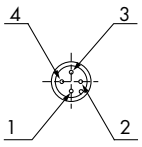

Pin no.	Pin description
1	DC (+)
2	OUT2
3	DC (–)
4	OUT1

PF2W740

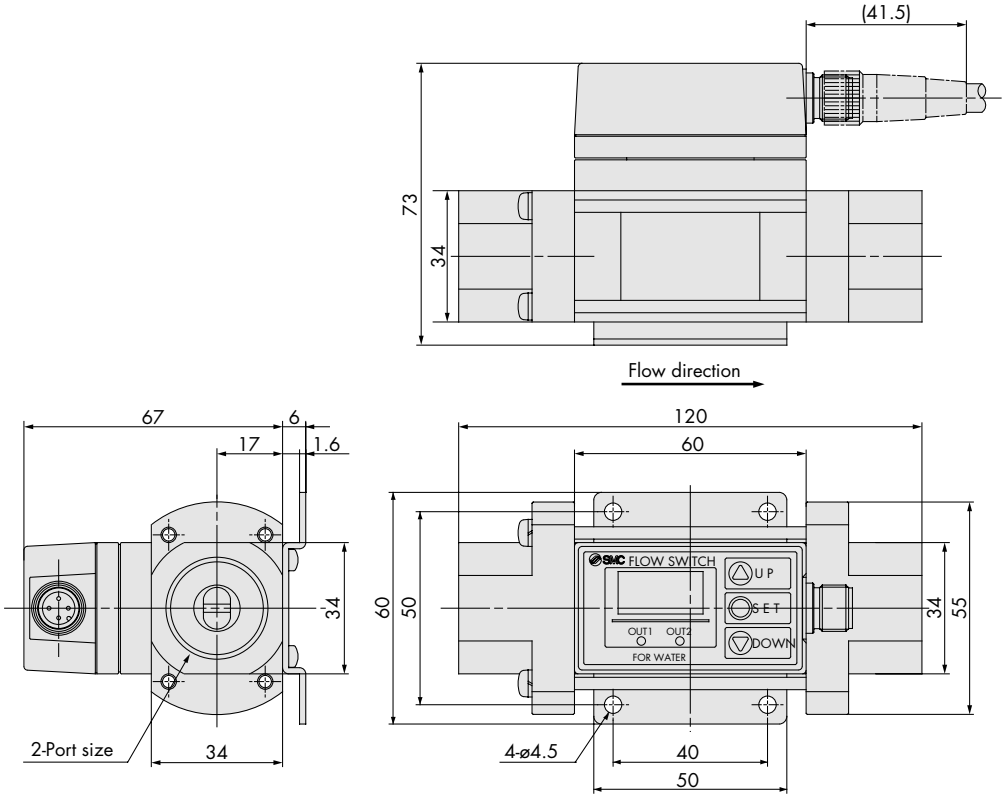

Dimensions: Integrated Display Type for Water

PF2W711

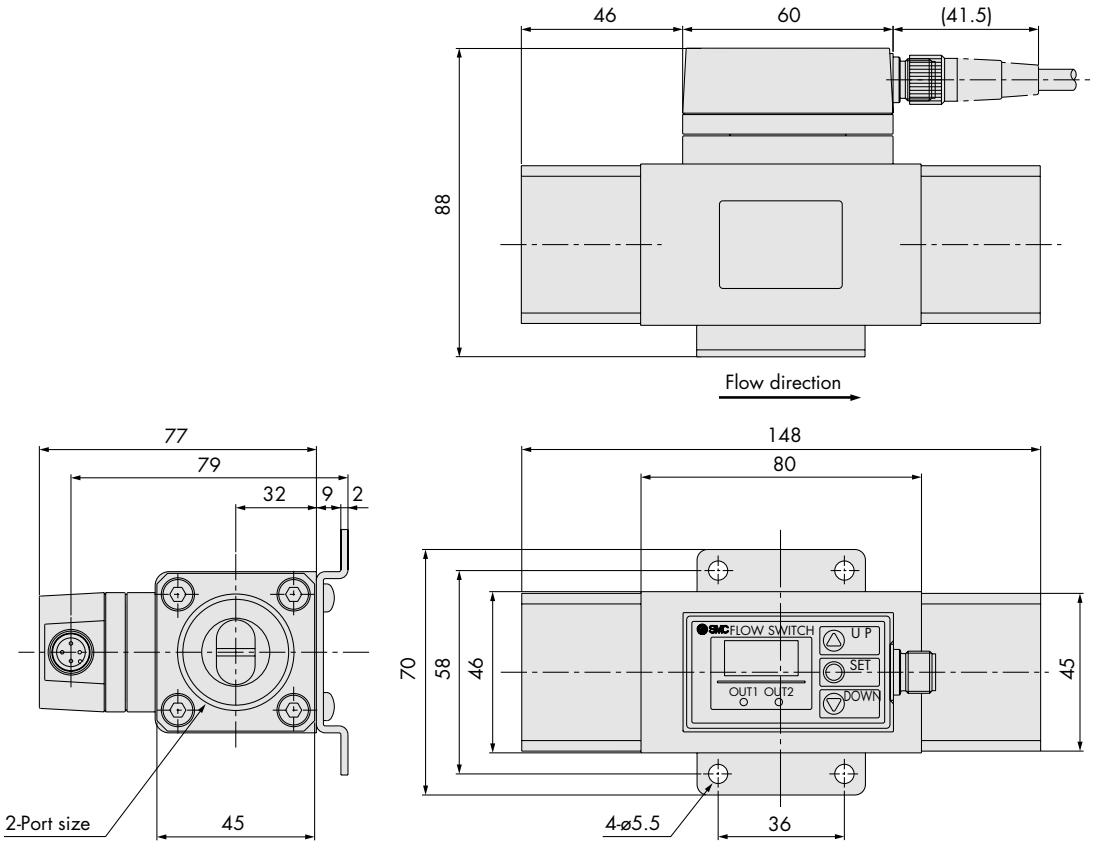

Digital Flow Switch For Water

Series PF2W

Features

- *Flow switch for water*
- *Remote display type*
- *Karmann vortex detection method*
- *No moving parts inside the sensor*
- *Very little resistance to passage of water*
- *Units with flow ranges from 0.5 to 100 l/min*
- *Output for remote display, optional analogue output*
- *IP65 splashproof construction*



(Remote display sensor unit)

How to Order

Remote type Sensor unit

PF2W5 [20] – [F] [03] – [ ]

Flow rate range

04	0.5 to 4 ℓ/min
20	2 to 16 ℓ/min
40	5 to 40 ℓ/min
11	10 to 100 ℓ/min

Thread type

F	G

Port size

Symbol	Port size	Flow rate (ℓ/min) 4	16	40	100	Applicable model
03	3/8	●	●			PF2W504, PF2W520
04	1/2		●	●		PF2W520, PF2W540
06	3/4			●	●	PF2W540, PF2W511
10	1				●	PF2W511

Output specifications

Nil	Output for display unit (sensor output) only
1	Output for display unit + Analog output (1 to 5V)
2	Output for display unit + Analog output (4 to 20 mA)

Specifications

Model		PF2W504	PF2W520	PF2W540	PF2W511
Measured fluid		Water			
Detection type		Karmann vortex			
Flow rate measuring range		0.5 to 4 ℓ/min	2 to 16 ℓ/min	5 to 40 ℓ/min	10 to 100 ℓ/min
Operating pressure range		0 to 1 MPa			
Withstand pressure		1.5 MPa			
Operating fluid temperature		0 to 50°C			0 to 50°C
Linearity Note 1)		±5% F.S. or less			±3% F.S. or less
Repeatability Note 1)		±2% F.S. or less			±1% F.S. or less
Temperature characteristics		±2% F.S. or less (15 to 35°C based on 25°C), ±3% F.S. or less (0 to 50°C based on 25°C)			
Output specifications Note 2)	Output for display unit	Pulse output, N channel, open drain, output for display unit PF2W3□□. (Specifications: Maximum load current of 10mA; Maximum applied voltage of 30 V)			
	Analog output	Voltage output 1 to 5V within the flow rate range Linearity: ±5% F.S. or less; allowable load resistance: 100 kΩ or more.			
		Current output 4 to 20 mA within the flow rate range Linearity: ±5% F.S. or less; allowable load resistance: 300 Ω or less with 12 VDC, 600 Ω or less with 24 VDC			
Power supply voltage		12 to 24 VDC (Ripple ±10% or less)			
Current consumption (No load)		20 mA or less			
Resistance	Enclosure	IP65			
	Operating temperature range	Operating: 0 to 50°C, Stored: –25 to 85°C (No condensation or freezing)			
	Withstand voltage	1000 VAC for 1 min. between external terminal and case			
	Insulation resistance	50 MΩ (500 VDC) between external terminal and case			
	Noise resistance	1000 Vp-p, Pulse width 1 µs, Rise time 1 ns			
Weight Note 3)		410 g	470 g	650 g	1,100 g
Port size (G)		3/8	3/8, 1/2	1/2, 3/4	3/4, 1

Note 1) The system accuracy when combined with PF2W3□□.
Note 2) Output system can be selected during initial setting.
Note 3) Without lead wire. (Add 20 g for the types of analog output whether voltage or current output selected.)

FOR MORE DETAILS
SEE OUR SPECIFIC CATALOGUES,
PRODUCTS CD's OR ONLINE INFORMATION

Dimensions: Remote Type Sensor Unit for Water

PF2W504/520-□(N)-□

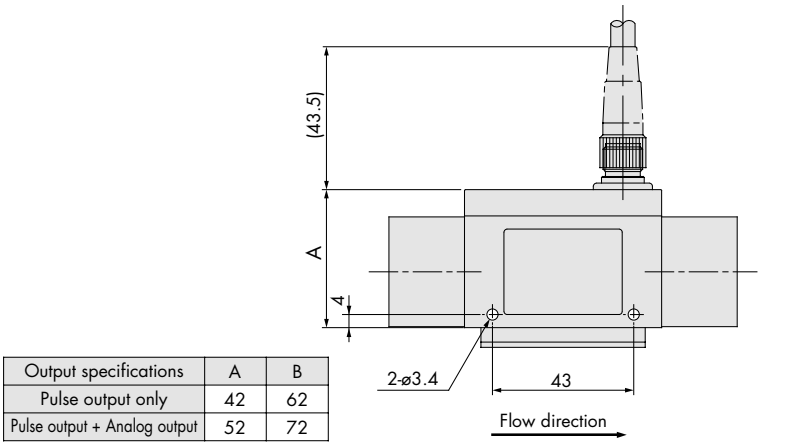

Output specifications	A	B
Pulse output only	42	62
Pulse output + Analog output	52	72

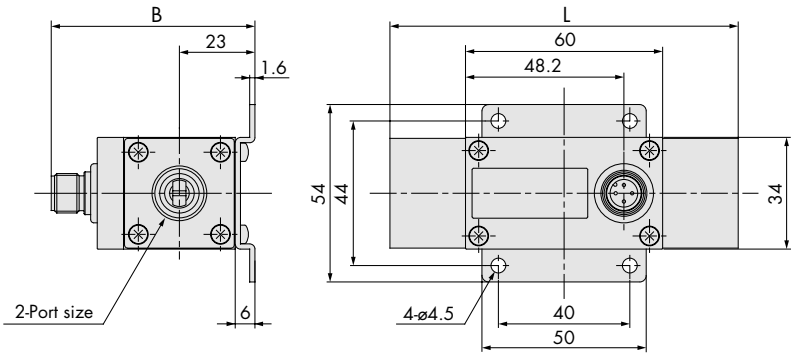

Model	L dimension
PF2W504	100
PF2W520	106

PF2W504-□(N)-□

Output specifications	A	B
Pulse output only	42	62
Pulse output + Analog output	52	72

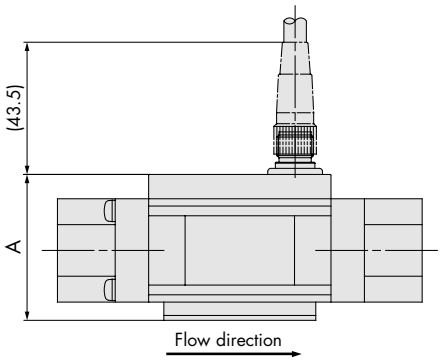

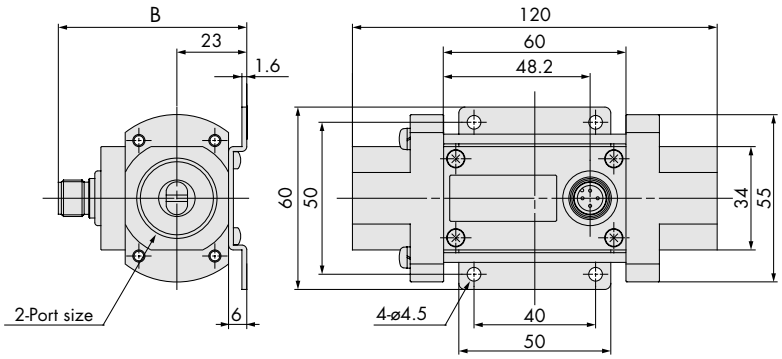

Wiring

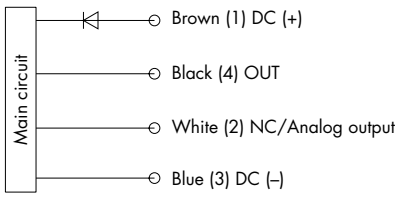

* Use this sensor by connecting to SMC remote type display unit Series PF2W3□□.

Connector pin numbers

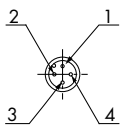

Pin no.	Pin description
1	DC (+)
2	NC/Analog output
3	DC (–)
4	OUT

Dimensions: Remote Type Sensor Unit for Water

PF2W511-□(N)-□

Output specifications	A	B
Pulse output only	63	77
Pulse output + Analog output	73	87

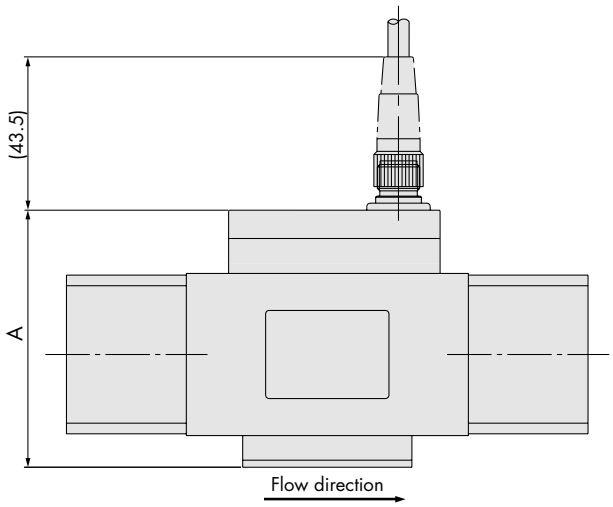

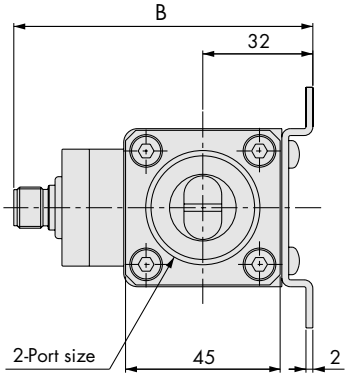

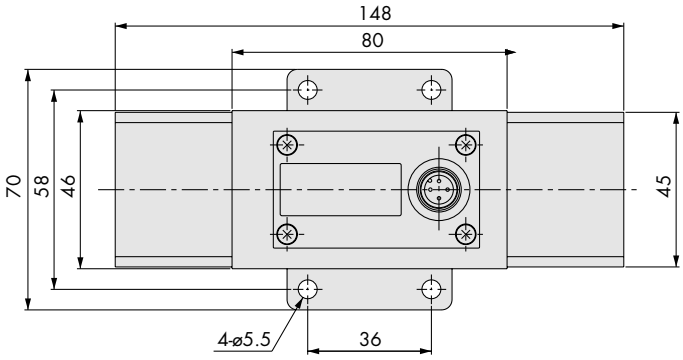

Analog output

1 to 5 VDC

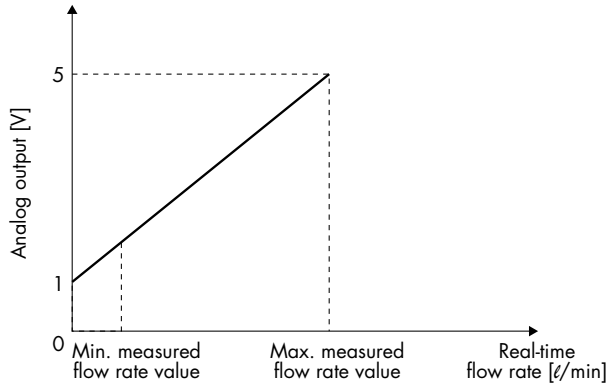

Part no.	Minimum measured flow rate value [ℓ/min]	Maximum measured flow rate value [ℓ/min]
PF2W504-□-1	0.5	4
PF2W520-□-1	2	16
PF2W540-□-1	5	40
PF2W511-□-1	10	100

4 to 20 mADC

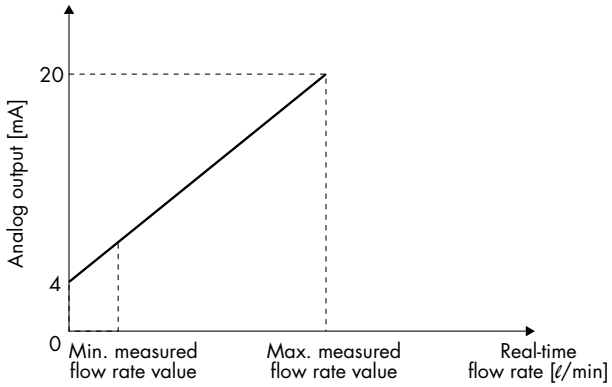

Part no.	Minimum measured flow rate value [ℓ/min]	Maximum measured flow rate value [ℓ/min]
PF2W504-□-2	0.5	4
PF2W520-□-2	2	16
PF2W540-□-2	5	40
PF2W511-□-2	10	100

FOR MORE DETAILS
SEE OUR SPECIFIC CATALOGUES,
PRODUCTS CD's OR ONLINE INFORMATION

Digital Flow Switch For Water

Series PF2W

Features



- *Displays flow information*
- *Works with remote sensor units*
- *Panel mounting construction*
- *Clear LED indication and can display metric or imperial units*
- *Two independent digital outputs*
- *Output modes instantaneous flow, total flow and counting pulse*

How to Order

Remote type Display unit

PF2W3 0 0 – A

Flow rate range

Symbol	Flow rate range	Type for sensor unit
0	0.5 to 4 ℓ/min	PF2W504
	2 to 16 ℓ/min	PF2W520
	5 to 40 ℓ/min	PF2W540
3	10 to 100 ℓ/mim	PF2W511

Output specifications

0	NPN open collector 2 outputs
1	PNP open collector 2 outputs

Mounting

A	Panel mounting

Panel mount adapter part no.

Description	Panel adapter B
Part no.	ZS-22-02

Specifications

Model		PF2W300/301			PF2W330/331
Flow rate measurement range Note 1)		0.35 to 4.5 ℓ/min	1.7 to 17.0 ℓ/min	3.5 to 45 ℓ/min	7 to 110 ℓ/min
Set flow rate range Note 1)		0.35 to 4.5 ℓ/min	1.7 to 17.0 ℓ/min	3.5 to 45 ℓ/min	7 to 110 ℓ/min
Minimum setting unit Note 1)		0.05 ℓ/min	0.1 ℓ/min	0.5 ℓ/min	1 ℓ/min
Accumulated pulse flow rate exchange value (Pulse width: 50 ms) Note 1)		0.05 ℓ/pulse	0.1 ℓ/pulse	0.5 ℓ/pulse	1 ℓ/pulse
Display unit	Real-time flow rate	ℓ/min, gal (US)/min			
	Accumulated flow	ℓ, gal (US)			
Accumulated flow range		0 to 999999 ℓ			
Linearity Note 2)		±5% F.S. or less			±3% F.S. or less
Repeatability Note 2)		±3% F.S. or less			±1% F.S. or less
Temperature characteristics		±2% F.S. or less (0 to 50°C, based on 25°C), ±1% F.S. or less (15 to 35°C, based on 25°C)			
Current consumption (No load)		50 mA or less			60 mA or less
Weight		45 g			
Output specifications Note 3)	Switch output	NPN open collector (PF2W300, PF2W330)	Maximum load current: 80 mA Internal voltage drop: 1V or less (With load current of 80 mA) Maximum applied voltage: 30 V 2 outputs		
		PNP open collector (PF2W301, PF2W331)	Maximum load current: 80 mA Internal voltage drop: 1.5 V or less (With load current of 80 mA) 2 outputs		
	Accumulated pulse output	NPN or PNP open collector (Same as switch output)			
Resistance	Enclosure	IP40			
	Operating temperature range	Operating: 0 to 50°C, Stored: –25 to 85°C (No condensation or freezing)			
	Withstand voltage	1000 VAC for 1 min. between external terminal and case			
	Insulation resistance	50 MΩ (500 VDC) between external terminal and case			
	Vibration resistance	10 to 500 Hz at whichever is smaller: 1.5 mm amplitude or 98 m/s^2 acceleration in X, Y, Z directions for 2 hrs. each			
Display		3-digit, 7-segment LED			
Indicator light		Lights up when output is ON, OUT1: Green; OUT2: Red			
Power supply voltage		12 to 24 VDC (Ripple ±10% or less)			
Response time		1 sec. or less			
Hysteresis		Hysteresis mode: Variable (can be set from 0) Window comparator mode: 3-digit fixed Note 4)			

Note 1) Values vary depending on each set flow rate range.
Note 2) The system accuracy when combined with PF2W5.
Note 3) Switch output and accumulated pulse output can be selected during initial setting.
Note 4) Window comparator mode — Since hysteresis (H) will reach 3 digits, keep P_1 and P_2 or n_1 and n_2 apart by 7 digits or more. (In case of output OUT2, n_1, 2 to be n_3, 4 and P_1, 2 to be P_3, 4.)

Dimensions: Remote Type Display Unit for Water

PF2W3□□-A
Panel mounting type

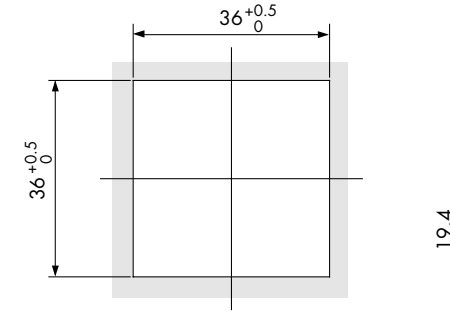

* The applicable panel thickness is 1 to 3.2 mm.

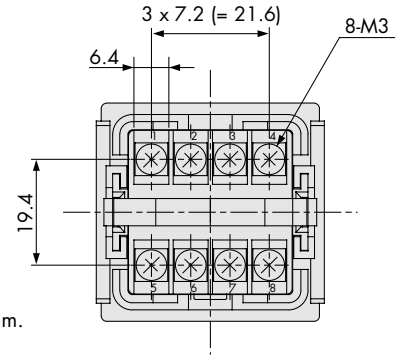

View A

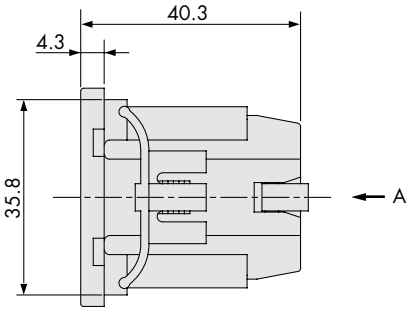

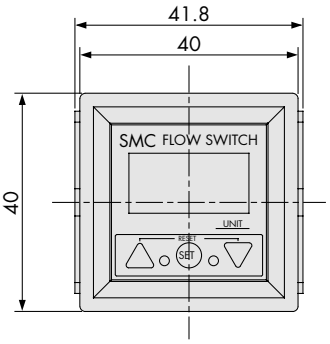

Panel fitting dimension

Terminal block number

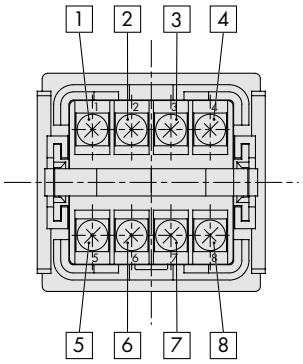

Digital Flow Switch, High Temperature Fluid Type For Water

Series PF2W

Features

- *Flow switch for heated water up to 90°C*
- *Karmann vortex detection method*
- *No moving parts inside the unit and very little resistance to water flow*
- *Flow ranges from 0.5 to 40 l/min*
- *Integrated LED display can show metric or imperial units*
- *One digital output plus analogue output*
- *Digital Output modes instantaneous flow, accumulated flow and counting pulse*
- *IP65 splashproof construction with all stainless body parts*



(Integrated display type)

How to Order

Integrated display type

PF2W7 **20** **T** – **F** **03** – **27**

Flow rate range

04	0.5 to 4 ℓ/min
20	2 to 16 ℓ/min
40	5 to 40 ℓ/min

Temperature range

T	0 to 90°C

Thread type

F	G

Port size

Symbol	Port size	Flow rate (ℓ/min) 4	16	40	Applicable model
03	3/8	●	●		PF2W704T, PF2W720T
04	1/2		●	●	PF2W720T, PF2W740T
06	3/4			●	PF2W740T

Output specifications

27	PNP open collector 2 outputs
67	NPN open collector 2 outputs

Specifications

Model		PF2W704T	PF2W720T	PF2W740T
Measured fluid		Water, Mixture of water (50%) and ethylene glycol (50%)		
Flow rate measurement range		0.35 to 4.5 ℓ/min	1.7 to 17.0 ℓ/min	3.5 to 45 ℓ/min
Set flow rate range		0.35 to 4.5 ℓ/min	1.7 to 17.0 ℓ/min	3.5 to 45 ℓ/min
Flow rate measuring range		0.5 to 4 ℓ/min	2 to 16 ℓ/min	5 to 40 ℓ/min
Minimum setting unit		0.05 ℓ/min	0.1 ℓ/min	0.5 ℓ/min
Accumulated pulse flow rate exchange value (Pulse width: 50 ms)		0.05 ℓ/pulse	0.1 ℓ/pulse	0.5 ℓ/pulse
Operating fluid temperature		0 to 90° C (With no cavitation)		
Linearity		±5% F.S. or less		
Repeatability		±3% F.S. or less		
Temperature characteristics Note 1)		±5% F.S. or less (0 to 90°C, based on 25°C)		
Current consumption (No load)		70 mA or less		
Weight		710 g		
Port size		3/8	3/8, 1/2	1/2, 3/4
Detection type		Karmann vortex		
Display		3-digit, 7-segment LED		
Display unit	Real-time flow rate	ℓ/min, gal (US)/min		
	Accumulated flow	ℓ, gal (US)		
Operating pressure range		0 to 1 MPa		
Withstand pressure		1.5 MPa		
Accumulated flow range		0 to 999999 ℓ		
Output specifications Note 2)	Switch output	NPN open collector	Maximum load current: 80 mA; Internal voltage drop: 1 V or less (With load current of 80 mA) Maximum applied voltage: 30 V; 2 outputs	
		PNP open collector	Maximum load current: 80 mA; Internal voltage drop: 1.5 V or less (With load current of 80 mA); 2 outputs	
	Accumulated pulse output	NPN or PNP open collector (Same as switch output)		
Indicator light		Lights up when output is ON OUT1: Green; OUT2: Red		
Response time		1 sec. or less		
Hysteresis		Hysteresis mode: Variable (can be set from 0); Window comparator mode: 3-digit fixed		
Power supply voltage		12 to 24 VDC (Ripple ±10% or less)		
Resistance	Enclosure	IP65		
	Operating temperature range	Operating: 0 to 50°C, Stored: –25 to 85°C (No condensation or freezing)		
	Withstand voltage	1000 VAC for 1 min. between external terminal and case		
	Insulation resistance	50 MΩ (500 VDC) between external terminal and case		
	Noise resistance	1000 Vp-p, Pulse width 1 µs, Rise time 1 ns		

Note 1) ±5% F.S. or less (0 to 50°C, based on 25°C), ±3% F.S. or less (15 to 35°C, based on 25°C)
Note 2) Switch output and accumulated pulse output can be selected during initial setting.
Note 3) Window comparator mode — Since hysteresis will reach 3 digits, keep P_1 and P_2 or n_1 and n_2 apart by 7 digits or more.
(In case of output OUT2, n_1, 2 to be n_3, 4 and P_1, 2 to be P_3, 4.)
Note 4) The flow switch is comformed to CE mark.

Dimensions: Integrated Display Type for Water

Connector pin numbers

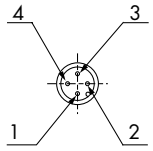

Pin no.	Pin description
1	DC (+)
2	OUT2
3	DC (–)
4	OUT1

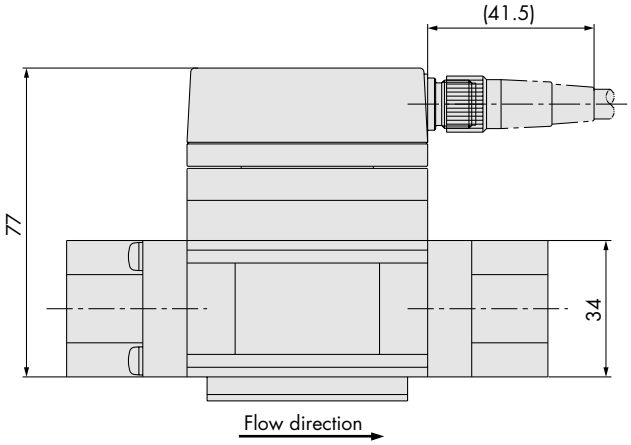

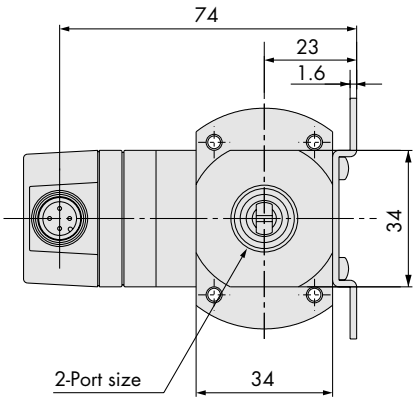

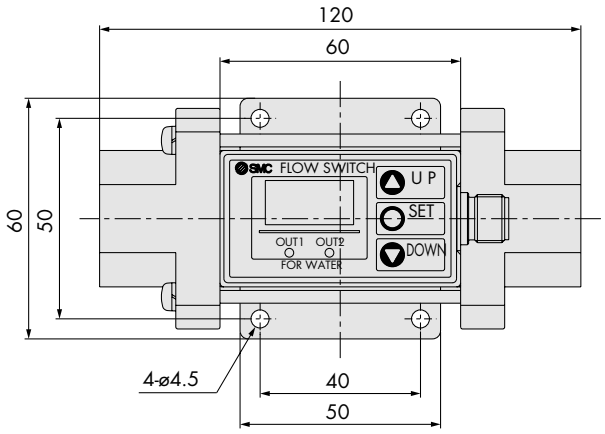

Digital Flow Switch, High Temperature Fluid Type For Water

Series PF2W

Features

- *Flow switch for hot water*
- *Remote display type*
- *Karmann vortex detection method*
- *No moving parts inside the sensor*
- *Very little resistance to passage of water*
- *Units with flow ranges from 0.5 to 100 l/min*
- *Output for remote display, optional analogue output*
- *IP65 splashproof construction*



(Remote type display unit)

How to Order

Remote type Display unit

PF2W5 **20** **T** – **F** **03** – **□**

Flow rate range

04	0.5 to 4 ℓ/min
20	2 to 16 ℓ/min
40	5 to 40 ℓ/min

Temperature range

T	0 to 90°C

Thread type

F	G

Port size

Symbol	Port size	Flow rate (ℓ/min) 4	16	40	Applicable model
03	3/8	●	●		PF2W504T/520T
04	1/2		●	●	PF2W520T/540T
06	3/4			●	PF2W540T

Output specifications

Nil	Output for display unit
1	Output for display unit + Analog output (1 to 5 V)
2	Output for display unit + Analog output (4 to 20 mA)

Specifications

Model		PF2W504T	PF2W520T	PF2W540T
Measured fluid		Water, Mixture of water (50%) and ethylene glycol (50%)		
Detection type		Karmann vortex		
Flow rate measuring range		0.5 to 4 ℓ/min	2 to 16 ℓ/min	5 to 40 ℓ/min
Operating pressure range		0 to 1 MPa		
Withstand pressure		1.5 MPa		
Operating fluid temperature		0 to 90°C (With no cavitation)		
Linearity Note 1)		±5% F.S. or less		
Repeatability Note 1)		±2% F.S. or less		
Temperature characteristics		±2% F.S. or less (15 to 35°C based on 25°C), ±3% F.S. or less (0 to 50°C based on 25°C)		
Output specifications Note 2)	Output for display unit	Pulse output, N channel, open drain, output for display unit PF2W3□□. (Specifications: Maximum load current of 10 mA; Maximum applied voltage of 30 V)		
	Analogue output	Voltage output 1 to 5 V within the flow rate range Linearity: ±5% F.S. or less; allowable load resistance: 100 kΩ or more.		
		Current output 4 to 20 mA within the flow rate range Linearity: ±5% F.S. or less; allowable load resistance: 300 Ω or less with 12 VDC, 600 Ω or less with 24 VDC		
Power supply voltage		12 to 24 VDC (Ripple ±10% or less)		
Current consumption (No load)		20 mA or less		
Resistance	Enclosure	IP65		
	Operating temperature range	Operating: 0 to 50°C, Stored: –25 to 85°C (No condensation or freezing)		
	Withstand voltage	1000 VAC for 1 min. between external terminal and case		
	Insulation resistance	50 MΩ (500 VDC) between external terminal and case		
	Noise resistance	1000 Vp-p, Pulse width 1 µs, Rise time 1 ns		
Weight		660 g		
Port size		3/8	3/8, 1/2	1/2, 3/4

Note 1) The system accuracy when combined with PF2W3□□.
Note 2) Output system can be selected during initial setting.
Note 3) The sensor unitis comformed to CE mark.

Dimensions: Remote Type Sensor Unit for Water

PF2W504T/520T/540T-□(N)

Output specifications	A	B
Pulse output only	52	72
Pulse output + Analog output	62	82

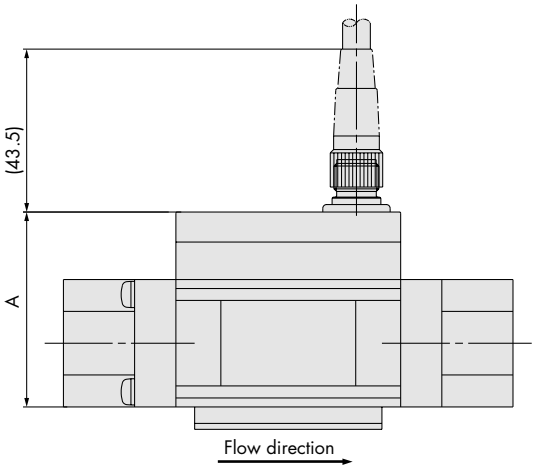

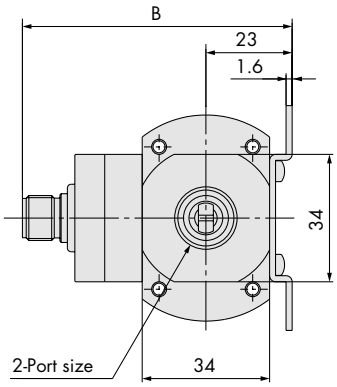

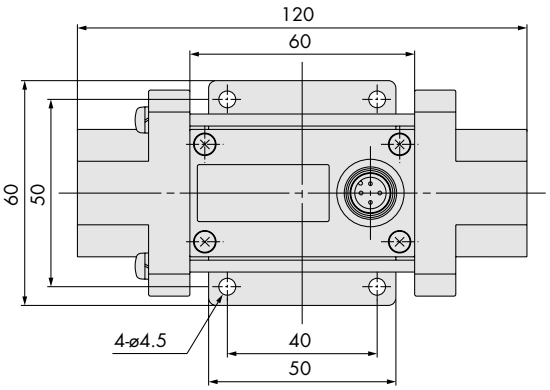

Wiring

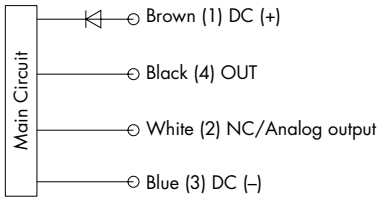

* Use this sensor by connecting to SMC remote type display unit Series PF2W3□□.

Analog output

1 to 5 VDC

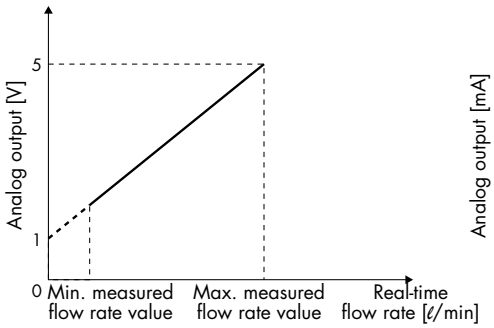

4 to 20 mADC

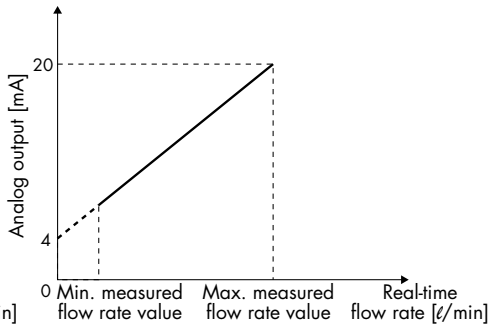

Connector pin numbers

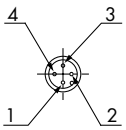

Part no.	Minimum measured flow rate value [ℓ/min]	Maximum measured flow rate value [ℓ/min]
PF2W504T-□-1	0.5	4
PF2W520T-□-1	2	16
PF2W540T-□-1	5	40

Part no.	Minimum measured flow rate value [ℓ/min]	Maximum measured flow rate value [ℓ/min]
PF2W504T-□-2	0.5	4
PF2W520T-□-2	2	16
PF2W540T-□-2	5	40

Pin no.	Pin description
1	DC (+)
2	NC/Analog output
3	DC (–)
4	OUT

Unikeyic Electronics

Global Electronic Components Distributor

Click to view pricing, inventory, delivery, and lifecycle information:

SMC:

P39800022 VT317-5D-02-Q 2543-1/4 KQ2Z08-02AS CDQ2B25-30DZ CJP2B10-15D EAXT502-1A-A02-L EVT317-4DO-02F-Q G27-20-R1 ZFC76-B AFD30-F03C-A AR20P-260S SV2000-00-P ZPT1-A5 SY9120-5YO-03F-Q SYJ3143-5MOZ-Q VMG11BU-F02-03 VQC4101-51 C4SL CP96SDB40-850C KQ2L06-G02A MKB32-10LZ VDW12HA VH201-N02 AQ340F-07-00 SY7220-5YO-02F-Q SYJ5140-5LOU-Q VQ1000-FPG-C6C6-D KQ2VS06-02AS KQ2W06-G02A