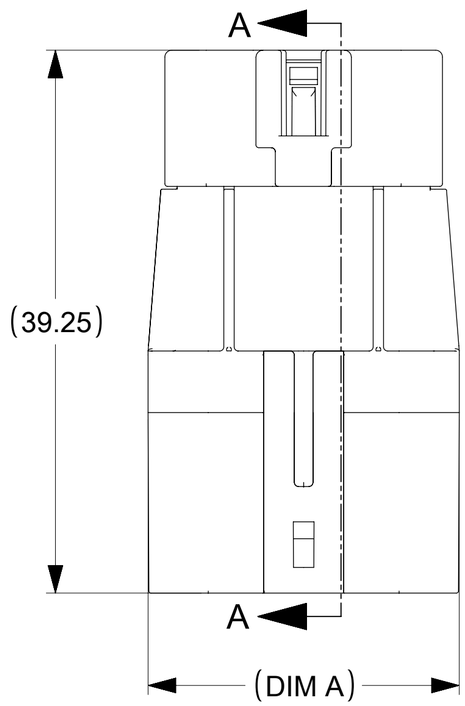

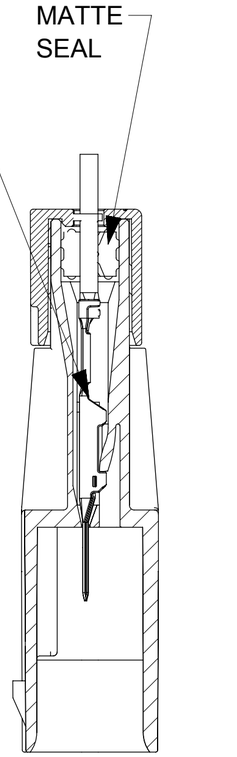

SECTION A-A

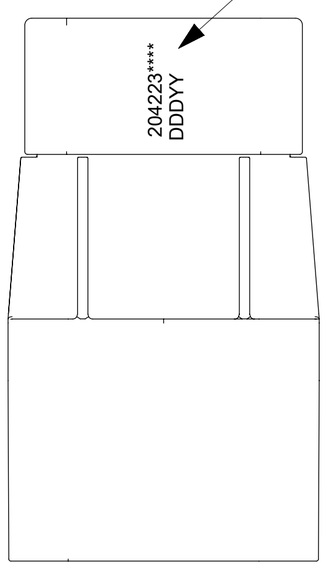

NOTES:

1. MATERIAL:
   HOUSING & REAR SEAL CAP: NYLON, UL94V-0, BLACK
   SEALS: INHERENTLY LUBRICATED SILICONE
2. FINISH: NONE
3. PRODUCT SPECIFICATION: 2042200000-PS
4. APPLICATION SPECIFICATION: 2042200000-AS
5. (B1) PACKAGING SPECIFICATION: 2042230000-PK, 2042230100-PK
6. THIS PART MATES WITH RECEPTACLE SERIES 204220.
7. THIS PART USES TERMINAL PART NUMBER 2042261001.
8. THIS PART CONFORMS TO CLASS 'C' REQUIREMENTS OF COSMETIC SPECIFICATION PS-45499-002.
9. VOIDED CIRCUITS HAVE A PLUG IN THE MATTE SEAL TO SEAL THE CIRCUIT AND WILL NOT ACCEPT TERMINALS.
10. THE 7MM CLIP SLOT CONFORMS TO EWCAP-005 REV D

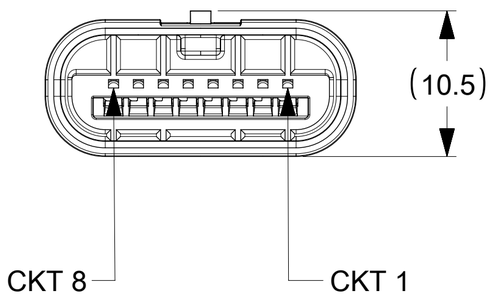

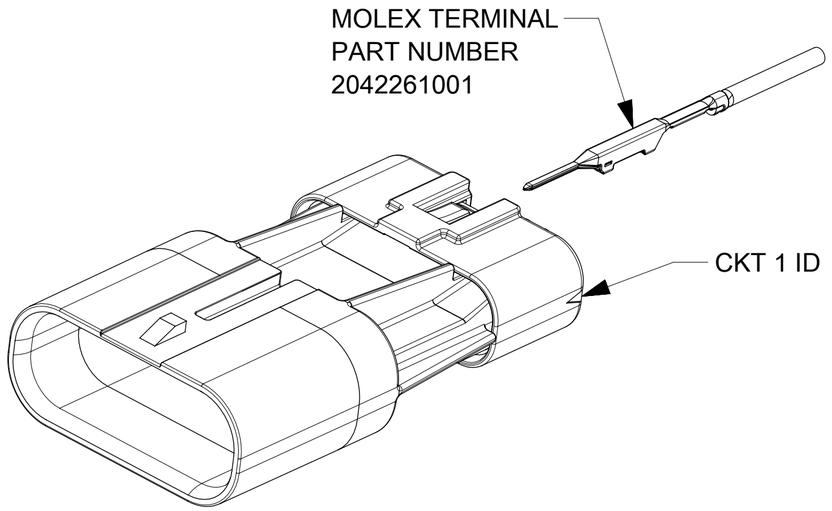

CIRCUIT SIZE	DIM A
2	11.7
4	15.3
6	18.9
8	22.5
10	26.1

DOCUMENT STATUS	P1	RELEASE DATE	2022/10/19 08:39:04

THIS DRAWING CONTAINS INFORMATION THAT IS PROPRIETARY TO MOLEX ELECTRONIC TECHNOLOGIES, LLC AND SHOULD NOT BE USED WITHOUT WRITTEN PERMISSION

FUNCTIONAL SYMBOLS
FA = 0
FC = 0
FP = 0
DIVISIONAL SYMBOLS

DIMENSION UNITS	SCALE
mm	3:1

GENERAL TOLERANCES (UNLESS SPECIFIED)

ANGULAR TOL	± °
4 PLACES	±
3 PLACES	±
2 PLACES	±
1 PLACE	± 0.2
0 PLACES	±

DRAFT WHERE APPLICABLE MUST REMAIN WITHIN DIMENSIONS

CURRENT REV DESC:

EC NO: 724638
DRWN: VENKAS5 2022/10/13
CHK'D: VENKAS5 2022/10/13
APPR: MRAMAKRISHNA 2022/10/19

INITIAL REVISION:
DRWN: TGREGORI 2017/05/03
APPR: RHODGE 2018/01/26

molex

PLUG ASSEMBLY
SQUBA 1.8

PRODUCT CUSTOMER DRAWING

DOCUMENT NUMBER	DOC TYPE	DOC PART	REVISION
2042230000-SD	PSD	000	B1

THIRD ANGLE PROJECTION	DRAWING	SERIES	MATERIAL NUMBER	CUSTOMER	SHEET NUMBER
	C-SIZE	204223	SEE TABLE	GENERAL MARKET	1 OF 3

FORMAT: master-tb-prod-C
REVISION: J
DATE: 2020/01/14

CIRCUIT SIZE	MATERIAL NUMBER	VOIDED CIRCUIT SEE NOTE 9	CLIP SLOT VERSION
2	204223-0002	NONE	NO
4	204223-0004	NONE	NO
6	204223-0006	NONE	NO
8	204223-0008	NONE	NO
10	204223-0010	NONE	NO
2	204223-9902	ALL CIRCUITS VOIDED	NO
4	204223-9904	ALL CIRCUITS VOIDED	NO
6	204223-9906	ALL CIRCUITS VOIDED	NO
8	204223-9908	ALL CIRCUITS VOIDED	NO
10	204223-9910	ALL CIRCUITS VOIDED	NO
4	204223-4004	4	NO
6	204223-6006	6	NO
8	204223-8008	8	NO
10	204223-1110	10	NO
8	204223-9808	1,2,5,6	NO
8	204223-9708	5	NO
8	204223-9608	3,6	NO
2	204223-0102	NONE	YES
4	204223-0104	NONE	YES
6	204223-0106	NONE	YES
8	204223-0108	NONE	YES
10	204223-0110	NONE	YES

2 CKT

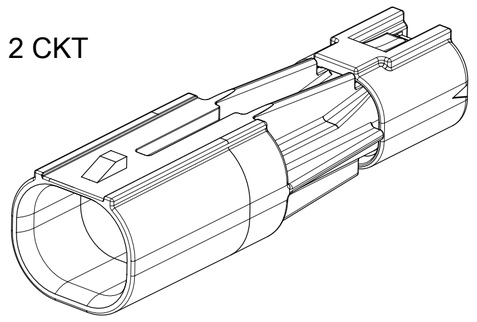

6 CKT

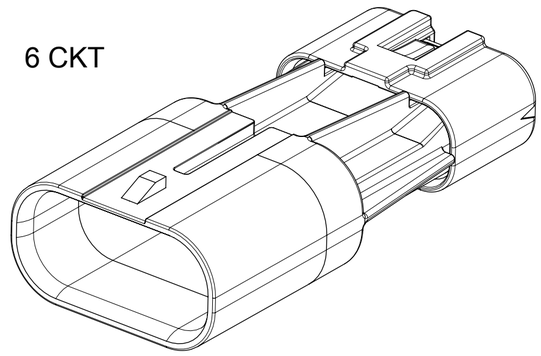

4 CKT

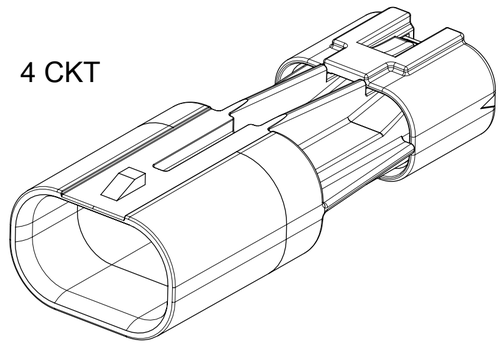

8 CKT

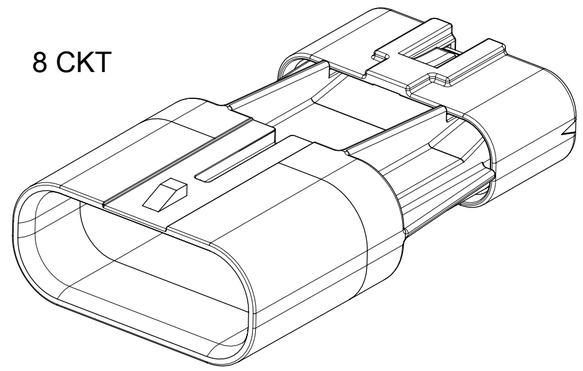

10 CKT

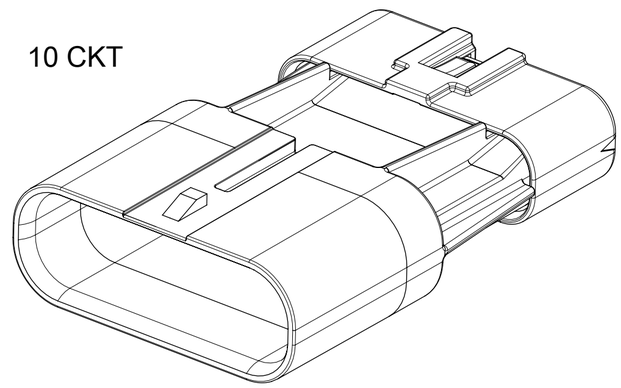

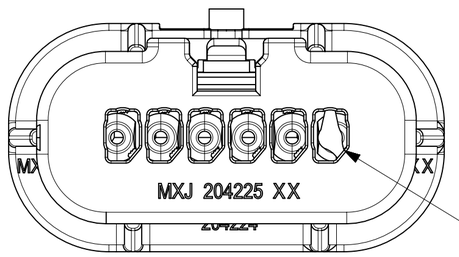

VOIDED CIRCUIT(S)
HAVE PLUG(S) PRESENT
SEE NOTE 9

AVAILABLE CIRCUIT SIZES

THIS DRAWING CONTAINS INFORMATION THAT IS PROPRIETARY TO MOLEX ELECTRONIC TECHNOLOGIES, LLC AND SHOULD NOT BE USED WITHOUT WRITTEN PERMISSION

FUNCTIONAL SYMBOLS: FA = 0, FC = 0, FP = 0

DIVISIONAL SYMBOLS

DIMENSION UNITS	SCALE
mm	3:1

GENERAL TOLERANCES (UNLESS SPECIFIED)

ANGULAR TOL	±	°
4 PLACES	±	
3 PLACES	±	
2 PLACES	±	
1 PLACE	±	0.2
0 PLACES	±	

DRAFT WHERE APPLICABLE MUST REMAIN WITHIN DIMENSIONS

CURRENT REV DESC:

EC NO: 724638
DRWN: VENKAS5 2022/10/13
CHK'D: VENKAS5 2022/10/13
APPR: MRAMAKRISHNA 2022/10/19

INITIAL REVISION:
DRWN: TGREGORI 2017/05/03
APPR: RHODGE 2018/01/26

THIRD ANGLE PROJECTION

DRAWING: C-SIZE
SERIES: 204223

molex

PLUG ASSEMBLY
SQUBA 1.8

PRODUCT CUSTOMER DRAWING

DOCUMENT NUMBER	DOC TYPE	DOC PART	REVISION
2042230000-SD	PSD	000	B1

MATERIAL NUMBER	CUSTOMER	SHEET NUMBER
SEE TABLE	GENERAL MARKET	2 OF 3

DOCUMENT STATUS	P1	RELEASE DATE	2022/10/19 08:39:04

FORMAT: master-tb-prod-C
REVISION: J
DATE: 2020/01/14

CONFIGURATIONS
SCALE : 3:1

CIRCUIT SIZE	DIM A
2	11.7
4	15.3
6	18.9
8	22.5
10	26.1

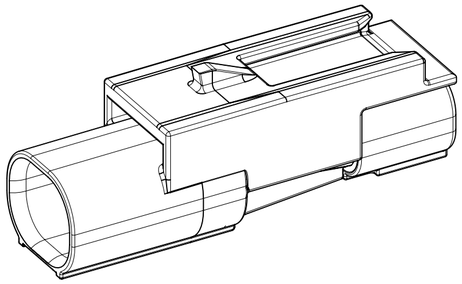

2 CIRCUIT

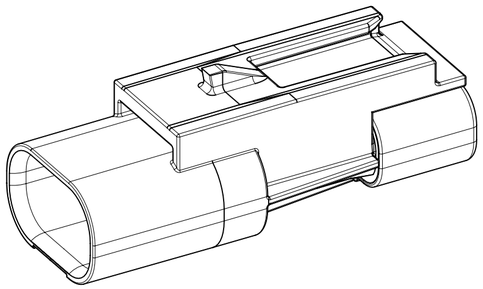

4 CIRCUIT

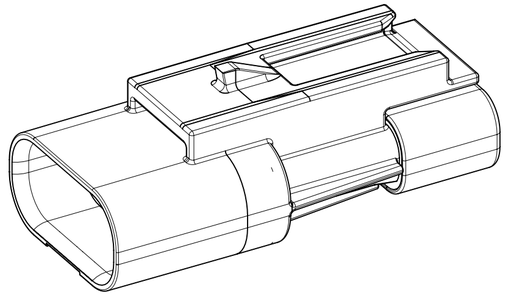

6 CIRCUIT

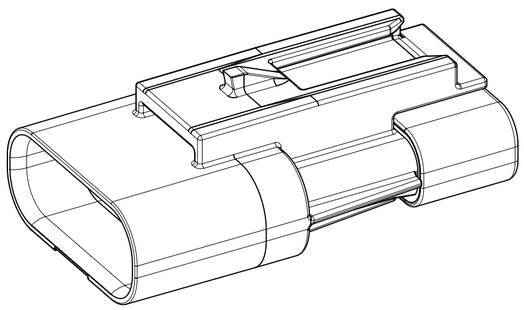

8 CIRCUIT

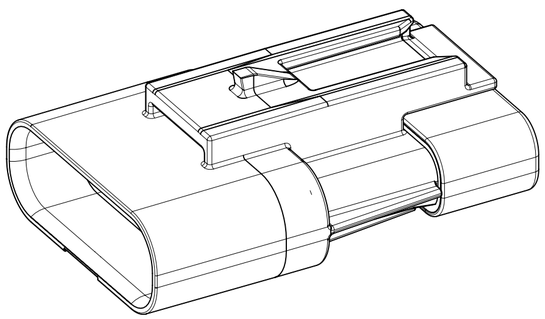

10 CIRCUIT

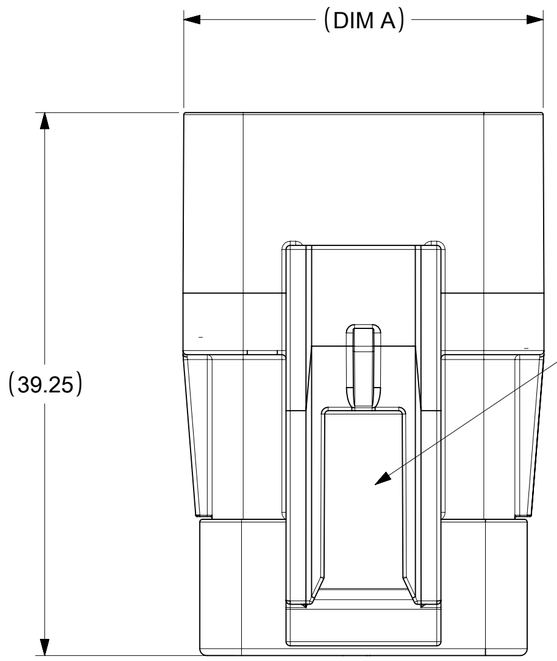

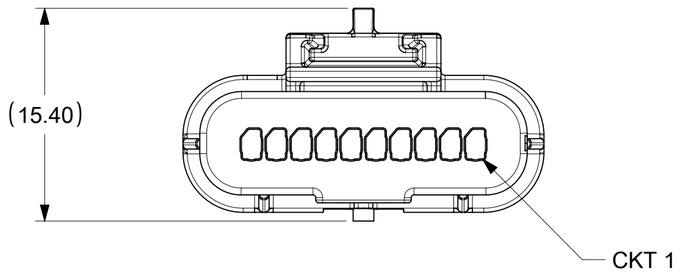

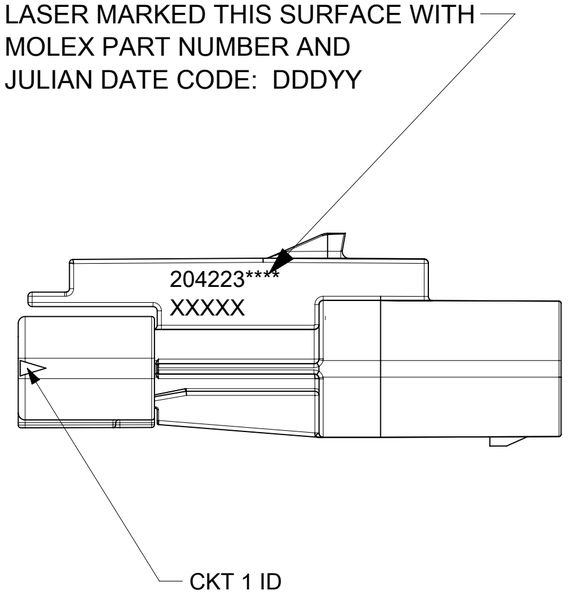

FUNCTIONAL SYMBOLS	
FA	= 0
FC	= 0
FP	= 0
DIVISIONAL SYMBOLS	

THIS DRAWING CONTAINS INFORMATION THAT IS PROPRIETARY TO MOLEX ELECTRONIC TECHNOLOGIES, LLC AND SHOULD NOT BE USED WITHOUT WRITTEN PERMISSION

DIMENSION UNITS	SCALE
mm	3:1

GENERAL TOLERANCES (UNLESS SPECIFIED)

ANGULAR TOL	±	°
4 PLACES	±	
3 PLACES	±	
2 PLACES	±	
1 PLACE	±	0.2
0 PLACES	±	

DRAFT WHERE APPLICABLE MUST REMAIN WITHIN DIMENSIONS

CURRENT REV DESC:

EC NO:	724638	
DRWN:	VENKAS5	2022/10/13
CHK'D:	VENKAS5	2022/10/13
APPR:	MRAMAKRISHNA	2022/10/19

INITIAL REVISION:

DRWN:	TGREGORI	2017/05/03
APPR:	RHODGE	2018/01/26

THIRD ANGLE PROJECTION

DRAWING	SERIES
C-SIZE	204223

molex

PLUG ASSEMBLY
SQUBA 1.8

PRODUCT CUSTOMER DRAWING

DOCUMENT NUMBER	DOC TYPE	DOC PART	REVISION
2042230000-SD	PSD	000	B1

MATERIAL NUMBER	CUSTOMER	SHEET NUMBER
SEE TABLE	GENERAL MARKET	3 OF 3

DOCUMENT STATUS	P1	RELEASE DATE	2022/10/19 08:39:04

FORMAT: master-tb-prod-C
REVISION: J1
DATE: 2021/05/01