ANGLE 1

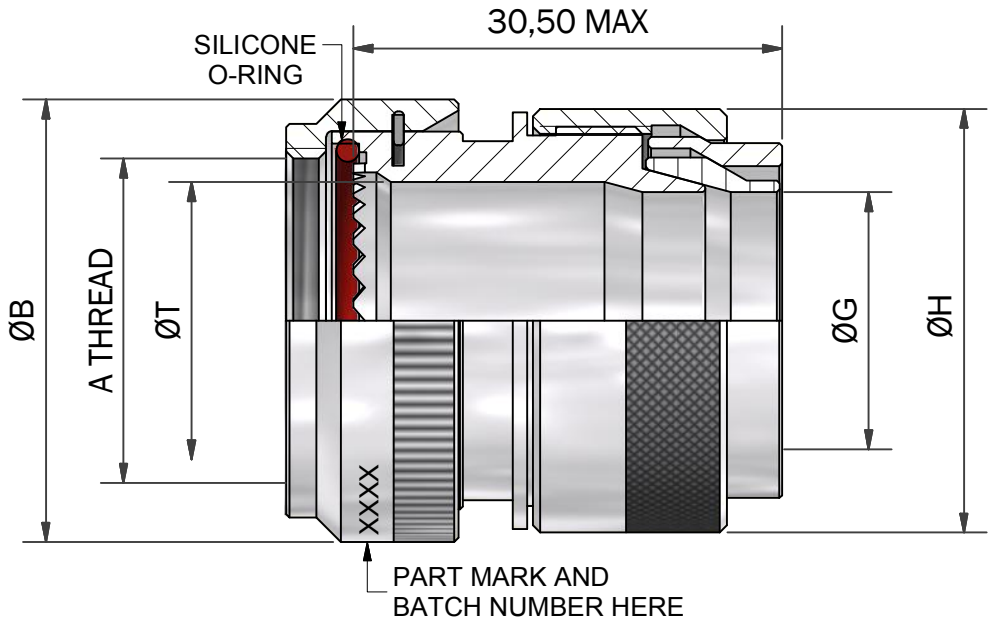

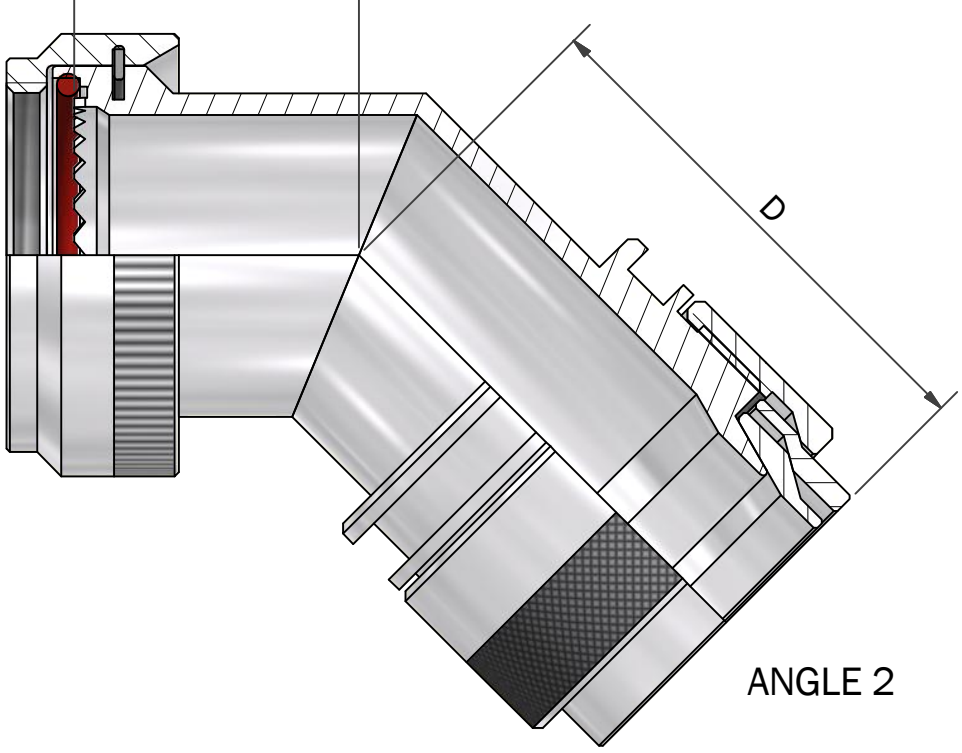

ANGLE 2

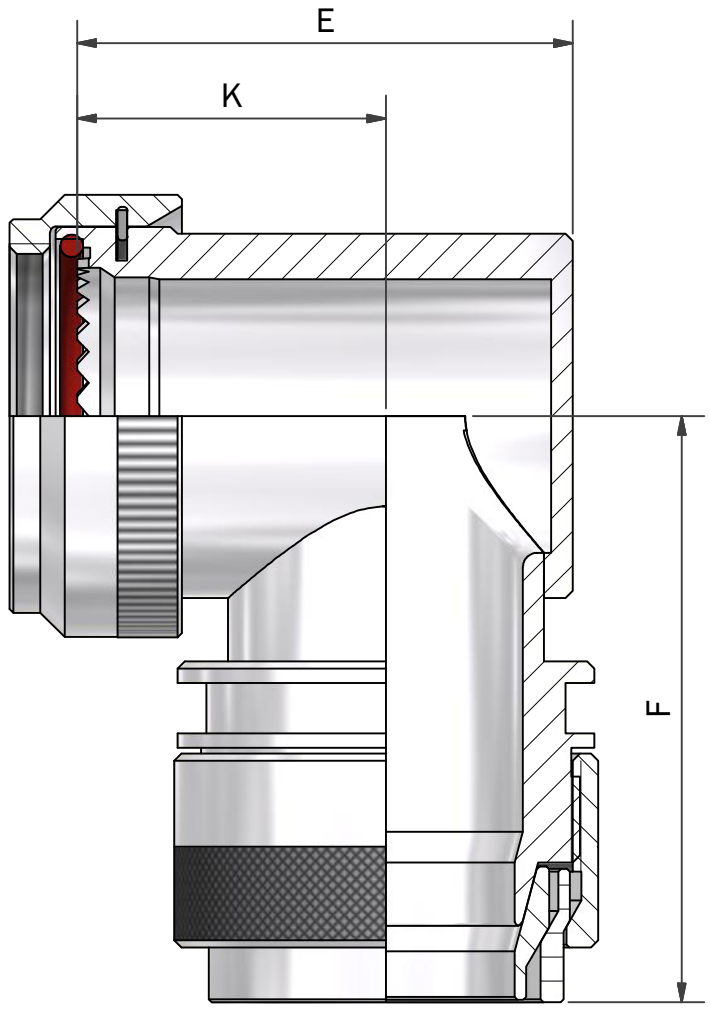

ANGLE 3

TABLE 1

SHELL SIZE	A THREAD	ØB MAX	C ±0,5	D MAX	ØT MIN	ØG MIN	ØH MAX	E MAX	F MAX	K ±0,5
09	7/16-28 UNEF	18,0	16,4	33,3	6,8	6,9	18,4	22,7	35,2	15,0
11	9/16-24 UNEF	21,0	17,2	34,5	10,2	9,6	22,0	26,2	37,0	17,0
13	11/16-24 UNEF	24,5	17,6	34,9	13,1	12,7	24,0	29,2	38,5	18,0
15	13/16-20 UNEF	27,8	18,5	35,8	16,2	14,8	27,0	32,2	40,0	20,0
17	15/16-20 UNEF	30,8	19,2	36,6	19,3	17,9	29,5	35,7	41,2	21,5
19	1 1/16-18 UNEF	34,1	19,6	36,6	22,3	19,9	33,9	39,7	43,3	23,0
21	1 3/16-18 UNEF	37,3	20,4	37,7	25,8	23,1	37,0	42,2	44,9	25,0
23	1 5/16-18 UNEF	41,0	20,8	38,1	28,3	26,2	40,8	45,2	46,4	26,0
25	1 7/16-18 UNEF	43,7	21,7	39,0	31,5	28,8	43,0	48,2	47,9	28,0

TABLE 2

CODE	FINISH
C	ELECTROLESS NICKEL
B	CADMIUM OLIVE DRAB OVER ELECTROLESS NICKEL
ZB	ZINC COBALT OLIVE DRAB OVER ELECTROLESS NICKEL
ZN	ZINC NICKEL BLACK PASSIVATE OVER ELECTROLESS NICKEL

SEE SS0076 FOR FULL RANGE OF FINISH OPTIONS

308F1-17-1-C

SERIES
CONNECTOR INTERFACE
ANGLE
SHELL SIZE (TABLE 1)
MATERIAL
ALUMINIUM ALLOY
FINISH (TABLE 2)

DRAWN	DATE	3RD ANGLE PROJECTION NOT TO SCALE	PART NUMBER: 308F SERIES
P.FRYER	18/11/2010		
DESIGN APPROVAL	DATE	UNLESS OTHERWISE SPECIFIED ALL DIMENSIONS IN MILLIMETRES GENERAL TOL LINEAR +/-0,25MM ANGULAR +/- 1°	TITLE: DOUBLE CONE ADAPTOR
K.SHEPPARD	17/12/2010		
DOC TYPE	Customer Drawing	**MATERIAL** SEE PART NUMBER BREAKDOWN	ASSY USED ON: MIL-DTL-38999 SERIES I / RESTRICTED TO:
ISSUE/REV AA	DCR ---	**FINISH** SEE PART NUMBER BREAKDOWN	
NCAGE CODE U5792	WEIGHT N/A		

THIS DRAWING IS COPYRIGHT AND THE PROPERTY OF POLAMCO LTD IT MUST NOT BE COPIED, USED FOR MANUFACTURE OR OTHERWISE DISCLOSED WITHOUT PRIOR WRITTEN CONSENT OF THE COMPANY.

POLAMCO LTD, WESTON LOCK, LOWER BRISTOL ROAD BATH BA2 1EP

SHT 1

DRAWING NO: P17672

Unikeyic Electronics

Global Electronic Components Distributor

Click to view pricing, inventory, delivery, and lifecycle information:

TE Connectivity:

175977-2 1903112-2 3430B2F51RTDF 650075-000 SBCHE64R7K TE50BR39J U5254-000005-030PA
141991-2 2-292161-3 2310537-1 2834055-1 3-1393225-0 917696-1 CRGCQ2010J3K3 1393431-1
1743455-2 1969656-1 1-962915-1 2005330-1 CPF0402B37K4E1 MPT100C18RF 2380312-2 3631B101LL
936348-1 ROX05SJ18R RH73H2A40MKTN 1-794222-0 2377783-2 SBCHE154R7K SMW73R0JT