Fairview Microwave
an INFINITE brand

FMAM63003 DATA SHEET

1.6 dB NF Input Protected Low Noise Amplifier, Operating from 30 MHz to 1.5 GHz with 29 dB Gain, 23 dBm P1dB and SMA

The FMAM63003 is an Input Protected Low Noise RF coaxial amplifier operating in the 30 MHz to 1.5 GHz frequency range. The amplifier has a 1.6 dB typical noise figure and can handle up to 1 Watt CW input power without damage. Additional typical performance includes 29 dB small signal gain with +/- 0.5 dB gain flatness, 1.35:1 VSWR, and +23 dBm P1dB. The exceptional technical performance is achieved through the use of a 3 stage hybrid MIC assembly that incorporates a low loss input Pin Diode Limiter protective circuit followed by gain stages that use Enhancement Mode (Emode) GaAs pHEMT devices. The 50 Ohm SMA connectorized module is unconditionally stable, includes built-in DC voltage regulation, and supports DC blocking Capacitors on the RF ports. The Amplifier operates with a bias voltage of +12V typical and over the temperature range of -40°C to +85°C. This model is RoHS compliant and has an EAR99 export classification.

Electrical Specifications (TA = +25°C , DC Voltage = 12Vdc , DC Current = 160mA)

Description	Min	Typ	Max	Unit
Frequency Range	0.03		1.5	GHz
Small Signal Gain	27.5	29	30.5	dB
Gain Flatness		±0.5	±0.75	dB
Gain Variance at OTR*		1		dB
Output at 1 dB Compression Point	+21.5	+23		dBm
Output 3rd Intercept Point	+36	+39		dBm
Noise Figure		1.6	2	dB
Input VSWR		1.35:1	1.5:1	
Output VSWR		1.35:1	1.5:1	
Reverse Isolation		45		dB
Spurious			-70	dBc
Input Power (CW)			+30	dBm
Operating DC Voltage	10	12	15	Volts
Operating DC Current	140	160	190	mA
Operating Temperature Range	-40		+85	°C

*OTR= Base Plate Operating Temperature Range

Absolute Maximum Rating

Parameter	Rating	Units
Source Voltage	+15	Volts
RF input Power	+30	dBm
Operating Temperature	-40 to +75	°C
Storage Temperature	-55 to +125	°C

ESD Sensitive Material, Transport material in Approved ESD bags. Handle only in approved ESD Workstation.



Features:

- 30 MHz to 1500 MHz Frequency Range
- 1 Watt input protection
- P1dB: 23 dBm
- High Small Signal Gain: 29 dB typical
- Gain Flatness: ±0.5 dB
- Noise Figure: 1.6 dB typ
- 50 Ohm Input and Output Matched
- -40°C to +85°C Operating Temperature
- Single DC Positive Supply
- DC Blocking Capacitors

Applications:

- R&D Labs
- Radar Systems
- Test Instrumentation
- Communication Systems
- IF Amplifier/RF Driver Amplifier
- RF Wideband Front Ends

Fairview Microwave
301 Leora Ln., Suite 100
Lewisville, TX 75056
Tel: 1-800-715-4396 / (972) 649-6678
Fax: (972) 649-6689
www.fairviewmicrowave.com
sales@fairviewmicrowave.com

Copyright © 2019

Mechanical Specifications

Size

Length	1.2 in [30.48 mm]
Width	0.85 in [21.59 mm]
Height	0.375 in [9.53 mm]
Weight	0.0445 lbs [20.18 g]
Input Connector	SMA Female
Output Connector	SMA Female

Environmental Specifications

Temperature

Operating Range	-40 to +85 deg C
Storage Range	-55 to +125 deg C

Compliance Certifications (see product page for current document)

Plotted and Other Data

Notes:

- Values at 25 °C, sea level
- ESD Sensitive Material, Transport material in Approved ESD bags. Handle only in approved ESD Workstation.

Functional Block Diagram

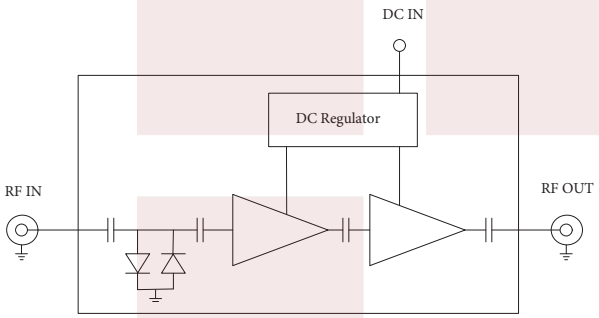

Copyright © 2019

Typical Performance Data

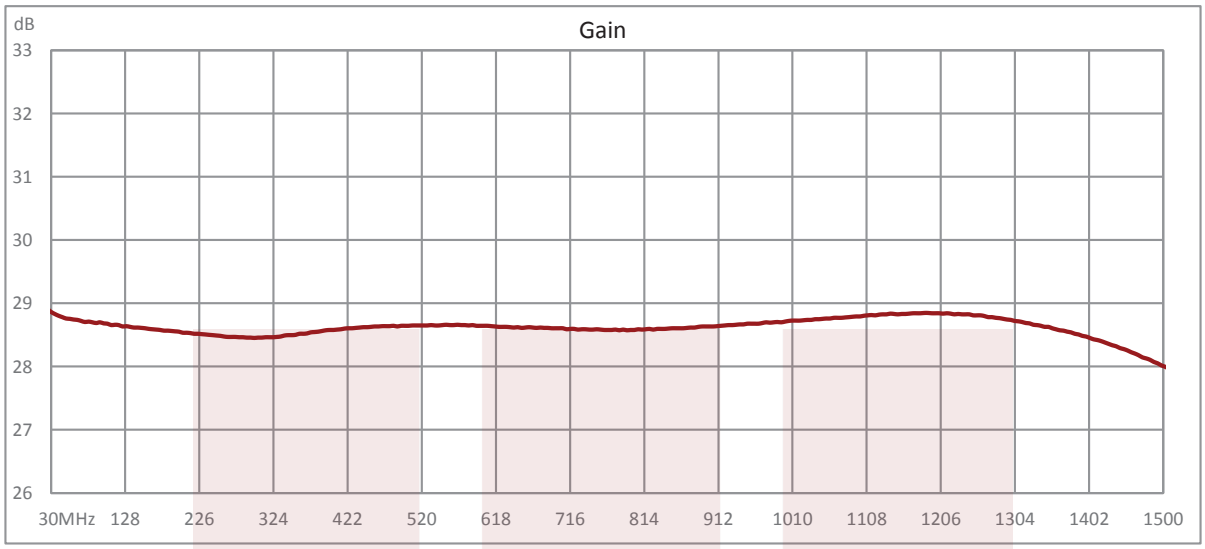

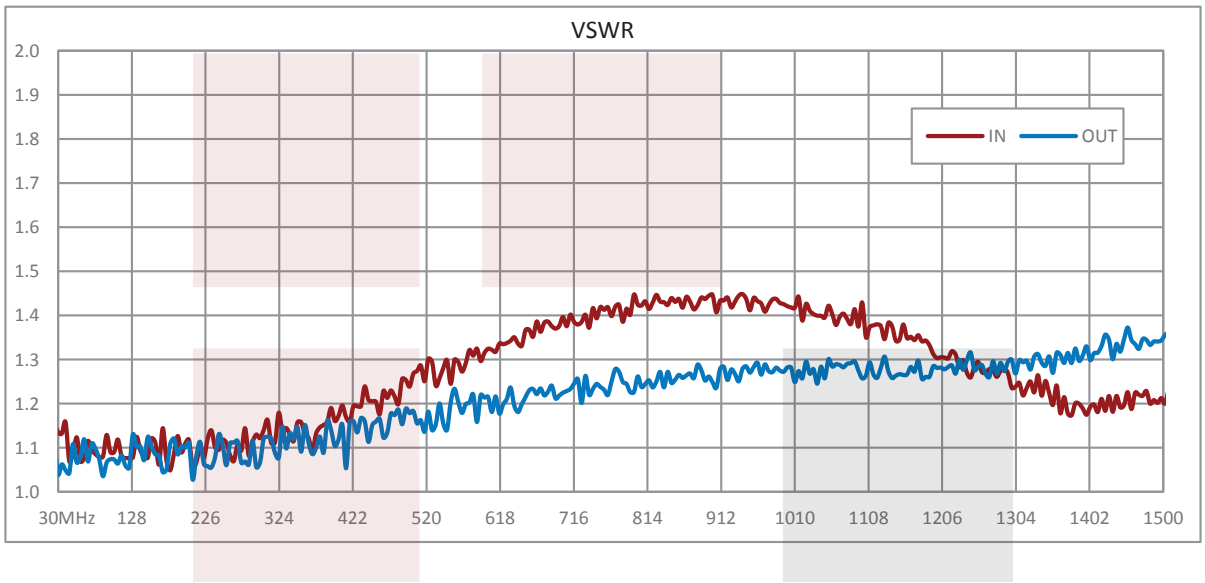

Copyright © 2019

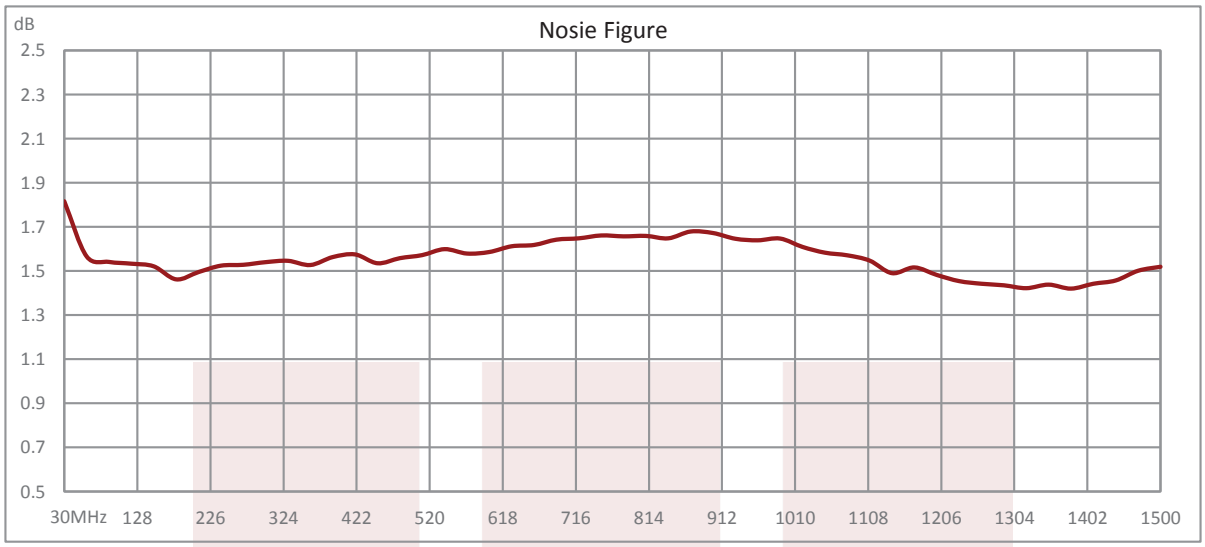

1.6 dB NF Input Protected Low Noise Amplifier, Operating from 30 MHz to 1.5 GHz with 29 dB Gain, 23 dBm P1dB and SMA from Fairview Microwave is in-stock and available to ship same-day. All of our RF/microwave products are available off-the-shelf from our ISO 9001:2008 certified facilities in Allen, Texas. Fairview Microwave is RF on-demand.

For additional information on this product, please click the following link: 1.6 dB NF Input Protected Low Noise Amplifier, Operating from 30 MHz to 1.5 GHz with 29 dB Gain, 23 dBm P1dB and SMA FMAM63003

URL: https://www.fairviewmicrowave.com/1.6db-nf-low-noise-amplifier-29db-fmam63003-p.aspx

The information contained in this document is accurate to the best of our knowledge and representative of the part described herein. It may be necessary to make modifications to the part and/or the documentation of the part, in order to implement improvements. Fairview Microwave reserves the right to make such changes as required. Unless otherwise stated, all specifications are nominal. Fairview Microwave does not make any representation or warranty regarding the suitability of the part described herein for any particular purpose, and Fairview Microwave does not assume any liability arising out of the use of any part or documentation.

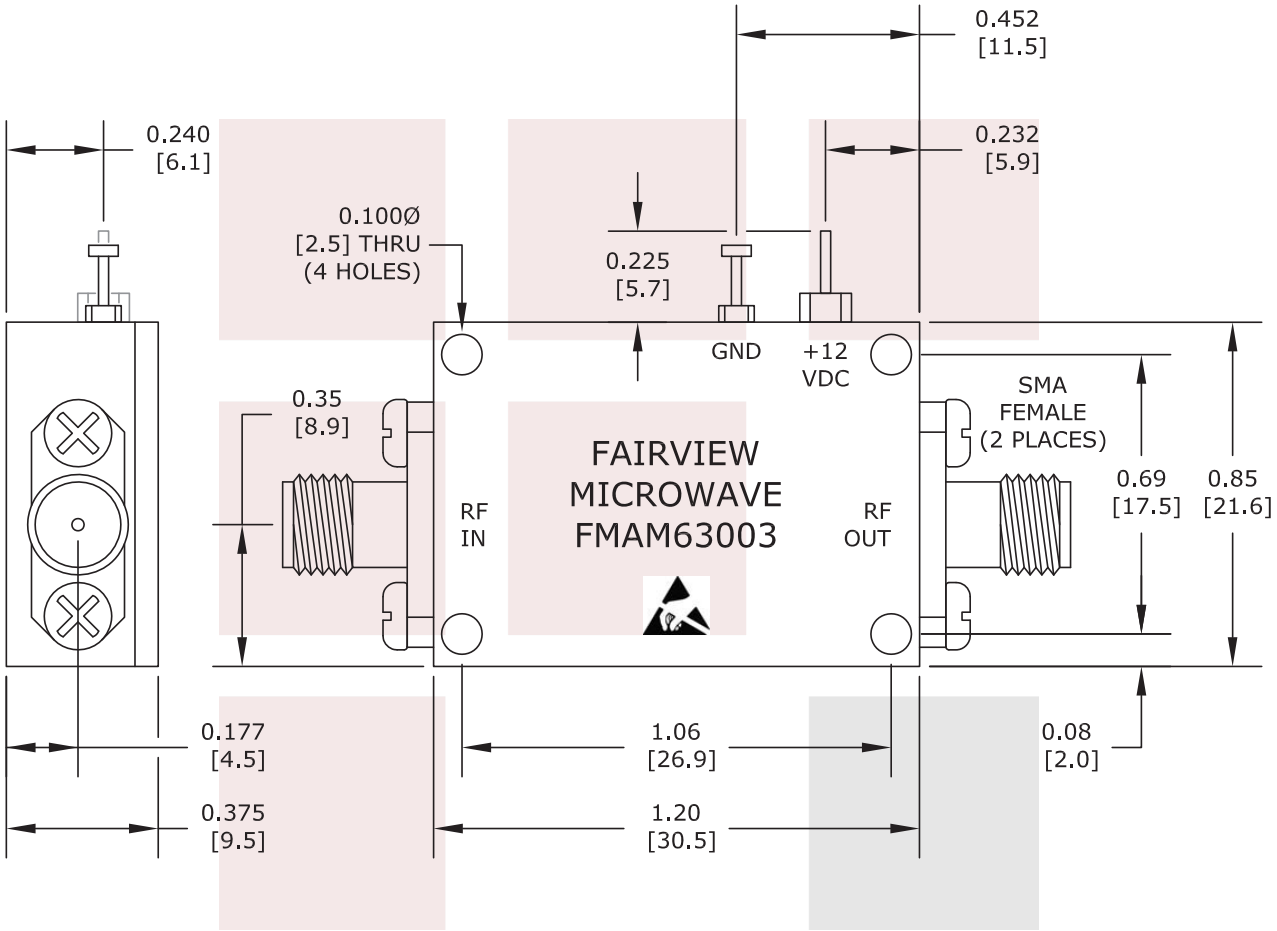

FAIRVIEW MICROWAVE INC. ALLEN, TX 75013 WWW.FAIRVIEWMICROWAVE.COM	NOTES: 1. UNLESS OTHERWISE SPECIFIED ALL DIMENSIONS ARE NOMINAL. 2. ALL SPECIFICATIONS ARE SUBJECT TO CHANGE WITHOUT NOTICE AT ANY TIME. 3. DIMENSIONS ARE IN INCHES [mm].				
TITLE 1.6 dB NF Input Protected Low Noise Amplifier, Operating from 30 MHz to 1.5 GHz with 29 dB Gain, 23 dBm P1dB and SMA	DWG NO FMAM63003	CAGE CODE 3FKR5			
	CAD FILE 012717	SHEET	SCALE N/A	SIZE A	2233

301 Leora Ln., Suite 100, Lewisville, TX 75056 | Tel: 1-800-715-4396 / (972) 649-6678 / Fax: (972) 649-6689

Copyright © 2019

Unikeyic Electronics

Global Electronic Components Distributor

Click to view pricing, inventory, delivery, and lifecycle information:

Fairview Microwave:

FMCN1351 FMCN1365 SC5504 SM3415 SM4940 SM4953 SM4968 ST-SMA9 FMAD1026 SM4232 SM4965 FMC0222085-12 SC4821 SM3010 SM3416 FMAD1608 FMCN1589 SM3310 SM4228 SM4985 SM5723 FMAD1218 SA18H-10 SM4947 SM4961 FMAD1116 SA18E-30 SM3130 SM4208 FMAD1206