74HC4514-Q100

4-to-16 line decoder/demultiplexer with input latches

Rev. 2 — 5 August 2024 Product data sheet

1. General description

The 74HC4514-Q100 is a 4-to-16 line decoder/demultiplexer having four binary weighted address inputs (A0 to A3), with latches, a latch enable input (LE), an enable input ($\overline{E}$) and 16 outputs (Q0 to Q15). When LE is HIGH, the selected output is determined by the data on An. When LE goes LOW, the last data present at An are stored in the latches and the outputs remain stable. When $\overline{E}$ is LOW, the selected output, determined by the contents of the latch, is HIGH. At $\overline{E}$ HIGH, all outputs are LOW. The enable input $\overline{E}$ does not affect the state of the latch. When the device is used as a demultiplexer, $\overline{E}$ is the data input and A0 to A3 are the address inputs. Inputs include clamp diodes. This enables the use of current limiting resistors to interface inputs to voltages in excess of V_{CC}.

This product has been qualified to the Automotive Electronics Council (AEC) standard Q100 (Grade 1) and is suitable for use in automotive applications.

2. Features and benefits

- Automotive product qualification in accordance with AEC-Q100 (Grade 1)
  - Specified from -40 °C to +85 °C and from -40 °C to +125 °C
- Wide supply voltage range from 2.0 V to 6.0 V
- CMOS low power dissipation
- High noise immunity
- CMOS input levels
- 16-line demultiplexing capability
- Decodes 4 binary-coded inputs into 16 mutually-exclusive outputs
- Latch-up performance exceeds 100 mA per JESD 78 Class II Level B
- Complies with JEDEC standards
  - JESD8C (2.7 V to 3.6 V)
  - JESD7A (2.0 V to 6.0 V)
- ESD protection:
  - HBM: ANSI/ESDA/JEDEC JS-001 class 2 exceeds 2000 V
  - CDM: ANSI/ESDA/JEDEC JS-002 class C3 exceeds 1000 V

3. Applications

- Digital multiplexing
- Address decoding
- Hexadecimal/BCD decoding

4. Ordering information

Table 1. Ordering information

Type number	Package			
	Temperature range	Name	Description	Version
74HC4514PW-Q100	−40 °C to +125 °C	TSSOP24	plastic thin shrink small outline package; 24 leads; body width 4.4 mm	SOT355-1

5. Functional diagram

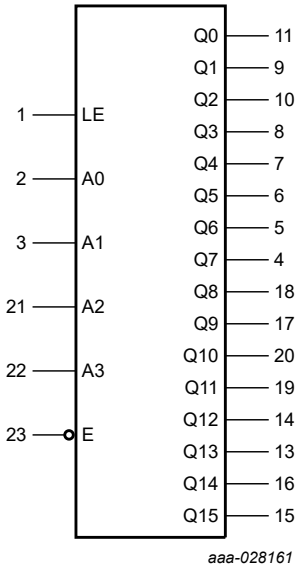

Fig. 1. Logic symbol

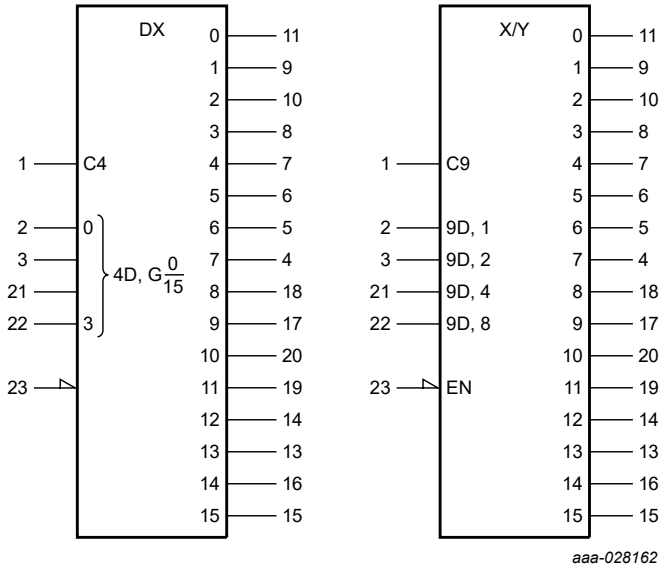

Fig. 2. IEC logic symbol

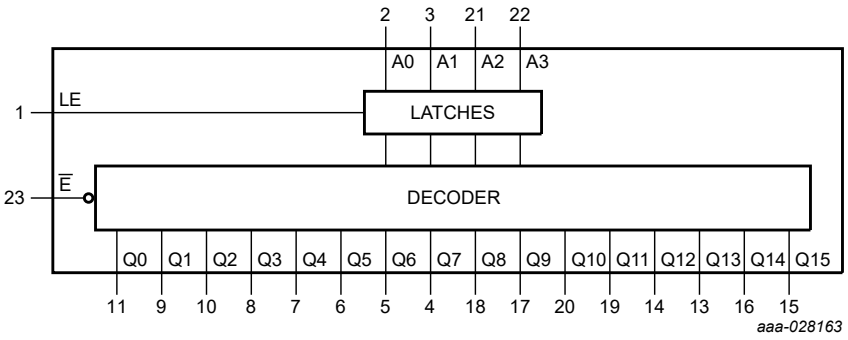

Fig. 3. Functional diagram

All information provided in this document is subject to legal disclaimers.

© Nexperia B.V. 2024. All rights reserved

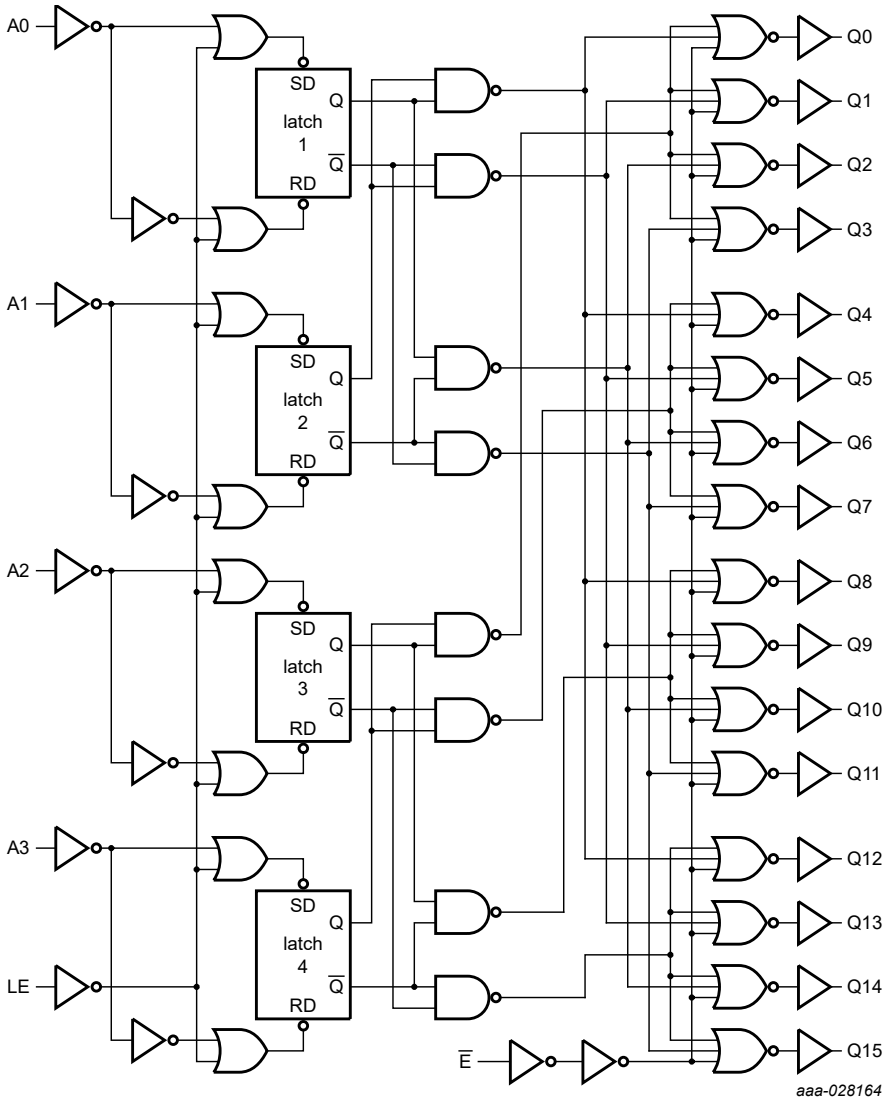

Fig. 4. Logic diagram

All information provided in this document is subject to legal disclaimers.

© Nexperia B.V. 2024. All rights reserved

6. Pinning information

6.1. Pinning

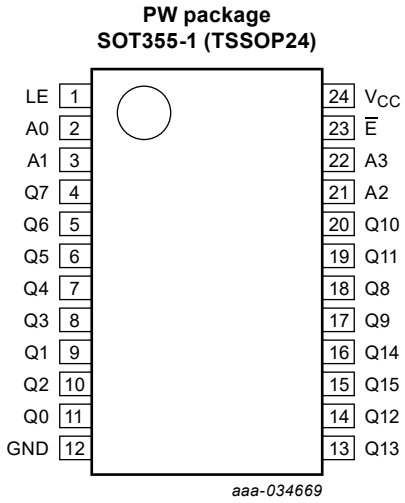

6.2. Pin description

Table 2. Pin description

Symbol	Pin	Description
LE	1	latch enable input (active HIGH)
$\overline{E}$	23	enable input (active LOW)
Q0, Q1, Q2, Q3, Q4, Q5, Q6, Q7, Q8, Q9, Q10, Q11, Q12, Q13, Q14, Q15	11, 9, 10, 8, 7, 6, 5, 4, 18, 17, 20, 19, 14, 13, 16, 15	multiplexer outputs (active HIGH)
A0, A1, A2, A3	2, 3, 21, 22	address inputs
GND	12	ground (0 V)
V_{CC}	24	supply voltage

All information provided in this document is subject to legal disclaimers.

© Nexperia B.V. 2024. All rights reserved

7. Functional description

Table 3. Function table

H = HIGH voltage level; L = LOW voltage level; X = don't care.
Input LE = HIGH.

Inputs					Outputs														
$\overline{E}$	A0	A1	A2	A3	Q0	Q1	Q2	Q3	Q4	Q5	Q6	Q7	Q8	Q9	Q10	Q11	Q12	Q13	Q14	Q15
H	X	X	X	X	L	L	L	L	L	L	L	L	L	L	L	L	L	L	L	L
L	L	L	L	L	H	L	L	L	L	L	L	L	L	L	L	L	L	L	L	L
L	H	L	L	L	L	H	L	L	L	L	L	L	L	L	L	L	L	L	L	L
L	L	H	L	L	L	L	H	L	L	L	L	L	L	L	L	L	L	L	L	L
L	H	H	L	L	L	L	L	H	L	L	L	L	L	L	L	L	L	L	L	L
L	L	L	H	L	L	L	L	L	H	L	L	L	L	L	L	L	L	L	L	L
L	H	L	H	L	L	L	L	L	L	H	L	L	L	L	L	L	L	L	L	L
L	L	H	H	L	L	L	L	L	L	L	H	L	L	L	L	L	L	L	L	L
L	H	H	H	L	L	L	L	L	L	L	L	H	L	L	L	L	L	L	L	L
L	L	L	L	H	L	L	L	L	L	L	L	L	H	L	L	L	L	L	L	L
L	H	L	L	H	L	L	L	L	L	L	L	L	L	H	L	L	L	L	L	L
L	L	H	L	H	L	L	L	L	L	L	L	L	L	L	H	L	L	L	L	L
L	H	H	L	H	L	L	L	L	L	L	L	L	L	L	L	H	L	L	L	L
L	L	L	H	H	L	L	L	L	L	L	L	L	L	L	L	L	H	L	L	L
L	H	L	H	H	L	L	L	L	L	L	L	L	L	L	L	L	L	H	L	L
L	L	H	H	H	L	L	L	L	L	L	L	L	L	L	L	L	L	L	H	L
L	H	H	H	H	L	L	L	L	L	L	L	L	L	L	L	L	L	L	L	H

8. Limiting values

Table 4. Limiting values

In accordance with the Absolute Maximum Rating System (IEC 60134). Voltages are referenced to GND (ground = 0 V).

Symbol	Parameter	Conditions	Min	Max	Unit
V_{CC}	supply voltage		-0.5	+7	V
I_{IK}	input clamping current	$V_I < -0.5$ V or $V_I > V_{CC} + 0.5$ V	-	±20	mA
I_{OK}	output clamping current	$V_O < -0.5$ V or $V_O > V_{CC} + 0.5$ V	-	±20	mA
I_O	output current	-0.5 V $< V_O < V_{CC} + 0.5$ V	-	±25	mA
I_{CC}	supply current		-	50	mA
I_{GND}	ground current		-50	-	mA
T_{stg}	storage temperature		-65	+150	°C
P_{tot}	total power dissipation	[1]	-	500	mW

[1] For SOT355-1 (TSSOP24) package: P_{tot} derates linearly with 12.4 mW/K above 110 °C.

All information provided in this document is subject to legal disclaimers.

© Nexperia B.V. 2024. All rights reserved

9. Recommended operating conditions

Table 5. Recommended operating conditions

Symbol	Parameter	Conditions	Min	Typ	Max	Unit
V_{CC}	supply voltage		2.0	5.0	6.0	V
V_I	input voltage		0	-	V_{CC}	V
V_O	output voltage		0	-	V_{CC}	V
$\Delta t/\Delta V$	input transition rise and fall rate	V_{CC} = 2.0 V	-	-	625	ns/V
		V_{CC} = 4.5 V	-	1.67	139	ns/V
		V_{CC} = 6.0 V	-	-	83	ns/V
T_{amb}	ambient temperature		-40	-	+125	°C

10. Static characteristics

Table 6. Static characteristics

At recommended operating conditions; voltages are referenced to GND (ground = 0 V).

Symbol	Parameter	Conditions	+25 °C			−40 °C to +85 °C		−40 °C to +125 °C		Unit
			Min	Typ	Max	Min	Max	Min	Max	
V_{IH}	HIGH-level input voltage	V_{CC} = 2.0 V	1.5	1.2	-	1.5	-	1.5	-	V
		V_{CC} = 4.5 V	3.15	2.4	-	3.15	-	3.15	-	V
		V_{CC} = 6.0 V	4.2	3.2	-	4.2	-	4.2	-	V
V_{IL}	LOW-level input voltage	V_{CC} = 2.0 V	-	0.8	0.5	-	0.5	-	0.5	V
		V_{CC} = 4.5 V	-	2.1	1.35	-	1.35	-	1.35	V
		V_{CC} = 6.0 V	-	2.8	1.8	-	1.8	-	1.8	V
V_{OH}	HIGH-level output voltage	V_I = V_{IH} or V_{IL}								
		I_O = -20 µA; V_{CC} = 2.0 V	1.9	2.0	-	1.9	-	1.9	-	V
		I_O = -20 µA; V_{CC} = 4.5 V	4.4	4.5	-	4.4	-	4.4	-	V
		I_O = -20 µA; V_{CC} = 6.0 V	5.9	6.0	-	5.9	-	5.9	-	V
		I_O = -4.0 mA; V_{CC} = 4.5 V	3.98	4.32	-	3.84	-	3.7	-	V
		I_O = -5.2 mA; V_{CC} = 6.0 V	5.48	5.81	-	5.34	-	5.2	-	V
V_{OL}	LOW-level output voltage	V_I = V_{IH} or V_{IL}								
		I_O = 20 µA; V_{CC} = 2.0 V	-	0	0.1	-	0.1	-	0.1	V
		I_O = 20 µA; V_{CC} = 4.5 V	-	0	0.1	-	0.1	-	0.1	V
		I_O = 20 µA; V_{CC} = 6.0 V	-	0	0.1	-	0.1	-	0.1	V
		I_O = 4.0 mA; V_{CC} = 4.5 V	-	0.15	0.26	-	0.33	-	0.4	V
		I_O = 5.2 mA; V_{CC} = 6.0 V	-	0.16	0.26	-	0.33	-	0.4	V
I_I	input leakage current	V_I = V_{CC} or GND; V_{CC} = 6.0 V	-	-	±0.1	-	±1.0	-	±1.0	µA
I_{CC}	supply current	V_I = V_{CC} or GND; I_O = 0 A; V_{CC} = 6.0 V	-	-	8.0	-	80	-	160	µA
C_I	input capacitance		-	3.5	-	-	-	-	-	pF

All information provided in this document is subject to legal disclaimers.

© Nexperia B.V. 2024. All rights reserved

11. Dynamic characteristics

Table 7. Dynamic characteristics

Voltages are referenced to GND (ground = 0 V); C_L = 50 pF unless otherwise specified; for test circuit, see Fig. 7.

Symbol	Parameter	Conditions	+25 °C			−40 °C to +85 °C		−40 °C to +125 °C		Unit
			Min	Typ	Max	Min	Max	Min	Max	
t_{pd}	propagation delay	An to Qn; see Fig. 5 [1]								
		V_{CC} = 2.0 V	-	74	230	-	290	-	345	ns
		V_{CC} = 4.5 V	-	27	46	-	58	-	69	ns
		V_{CC} = 5 V; C_L = 15 pF	-	23	-	-	-	-	-	ns
		V_{CC} = 6.0 V	-	22	39	-	49	-	59	ns
		LE to Qn; see Fig. 5								
		V_{CC} = 2.0 V	-	74	230	-	290	-	345	ns
		V_{CC} = 4.5 V	-	27	46	-	58	-	69	ns
		V_{CC} = 6.0 V	-	22	39	-	49	-	59	ns
		$\overline{E}$ to Qn; see Fig. 5								
		V_{CC} = 2.0 V	-	41	175	-	220	-	265	ns
		V_{CC} = 4.5 V	-	15	35	-	44	-	53	ns
		V_{CC} = 6.0 V	-	12	30	-	37	-	45	ns
t_t	transition time	Qn; see Fig. 5 [2]								
		V_{CC} = 2.0 V	-	19	75	-	95	-	110	ns
		V_{CC} = 4.5 V	-	7	15	-	19	-	22	ns
		V_{CC} = 6.0 V	-	6	13	-	16	-	19	ns
t_W	pulse witdh	LE HIGH; see Fig. 6								
		V_{CC} = 2.0 V	80	14	-	100	-	120	-	ns
		V_{CC} = 4.5 V	16	5	-	20	-	24	-	ns
		V_{CC} = 6.0 V	14	4	-	17	-	20	-	ns
t_{su}	set-up time	An to LE; see Fig. 6								
		V_{CC} = 2.0 V	90	25	-	115	-	135	-	ns
		V_{CC} = 4.5 V	18	9	-	23	-	27	-	ns
		V_{CC} = 6.0 V	15	7	-	20	-	23	-	ns
t_h	hold time	An to LE; see Fig. 6								
		V_{CC} = 2.0 V	1	−11	-	1	-	1	-	ns
		V_{CC} = 4.5 V	1	−4	-	1	-	1	-	ns
		V_{CC} = 6.0 V	1	−3	-	1	-	1	-	ns
C_{PD}	power dissipation capacitance	per package; V_I = GND to V_{CC} [3]	-	44	-	-	-	-	-	pF

[1] t_{pd} is the same as t_{PLH} and t_{PHL}

[2] t_t is the same as t_{TLH} and t_{THL}

[3] C_{PD} is used to determine the dynamic power dissipation (P_D in µW).
$P_D = C_{PD} \times V_{CC}^2 \times f_i \times N + \Sigma(C_L \times V_{CC}^2 \times f_o)$ where:
f_i = input frequency in MHz; f_o = output frequency in MHz;
C_L = output load capacitance in pF;
V_{CC} = supply voltage in V;
N = number of load switching outputs;
$\Sigma(C_L \times V_{CC}^2 \times f_o)$ = sum of the outputs.

All information provided in this document is subject to legal disclaimers.

© Nexperia B.V. 2024. All rights reserved

11.1. Waveforms and test circuit

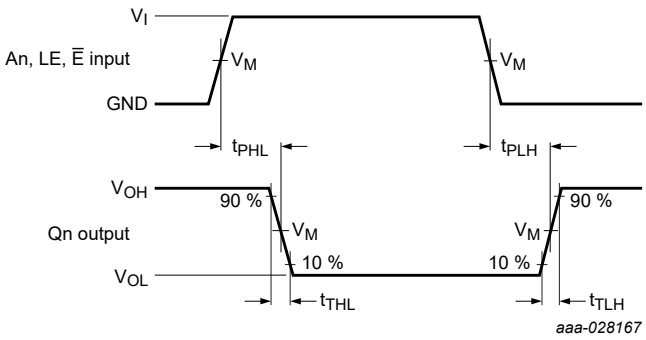

Measurement points are given in Table 8.

V_{OL} and V_{OH} are typical output voltage levels that occur with the output load.

Fig. 5. The inputs (An, LE, $\overline{E}$) to output (Qn) propagation delays and the output transition times

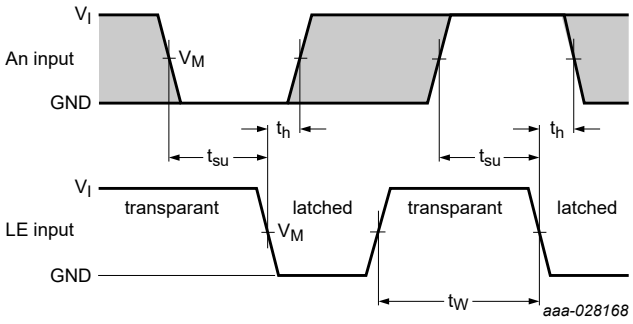

Measurement points are given in Table 8.

The shaded areas indicate when the input is permitted to change for predictable output performance.

Fig. 6. Data set-up and hold times for An input to LE input and LE input pulse width

Table 8. Measurement points

Type	Input		Output
	V_I	V_M	V_M
74HC4514-Q100	GND to V_{CC}	$0.5V_{CC}$	$0.5V_{CC}$

All information provided in this document is subject to legal disclaimers.

© Nexperia B.V. 2024. All rights reserved

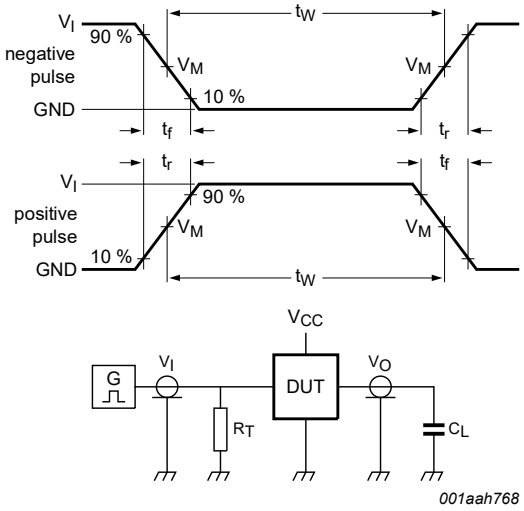

Test data is given in Table 9.

Definitions test circuit:

R_T = Termination resistance; should be equal to output impedance Z_o of the pulse generator;

C_L = Load capacitance including jig and probe capacitance.

Fig. 7. Test circuit for measuring switching times

Table 9. Test data

Type	Input		Load
	V_I	t_r, t_f	C_L
74HC4514-Q100	GND to V_{CC}	6 ns	15 pF, 50 pF

All information provided in this document is subject to legal disclaimers.

© Nexperia B.V. 2024. All rights reserved

12. Application information

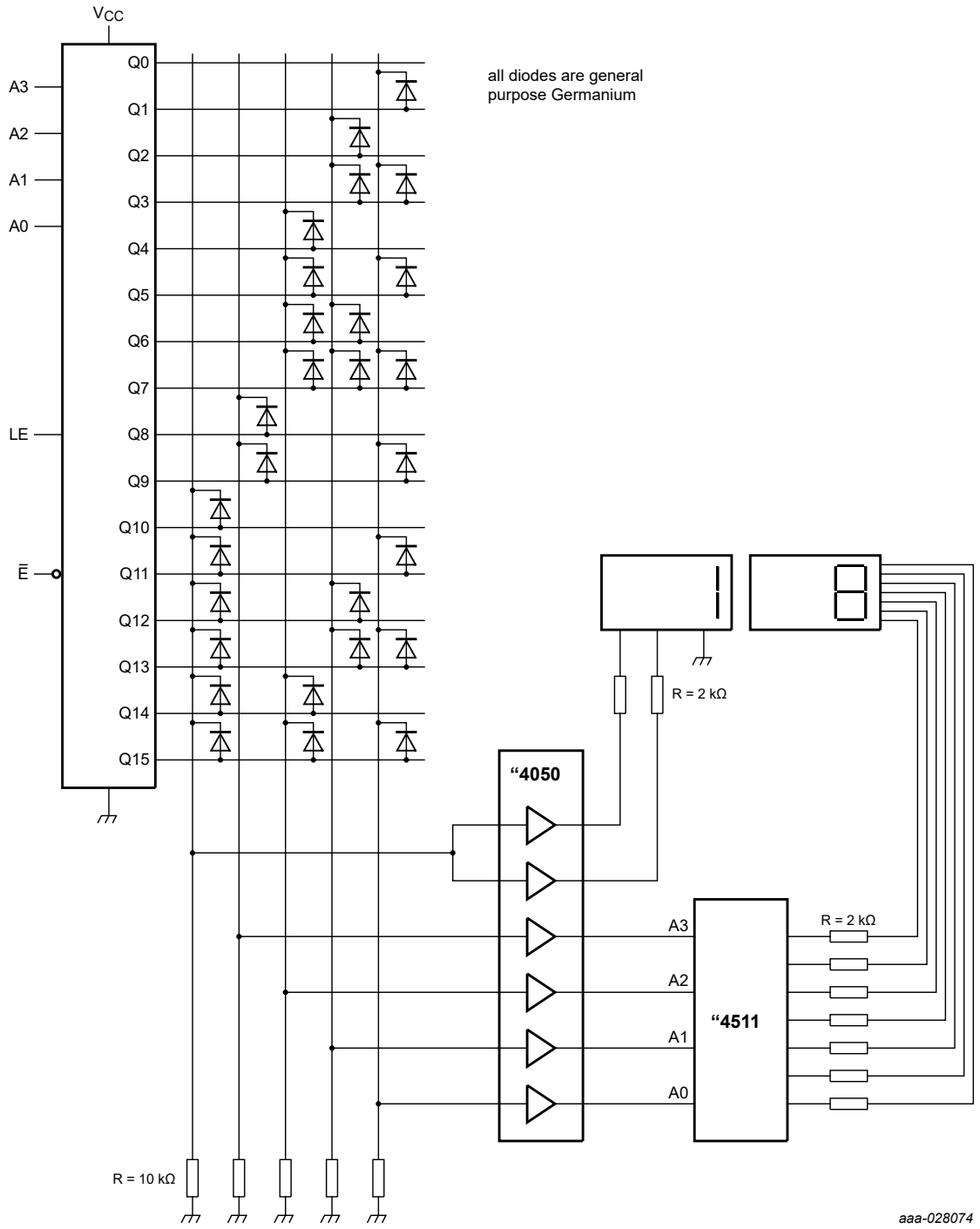

Fig. 8. Code-to-code conversion; hexadecimal to BCD

All information provided in this document is subject to legal disclaimers.

© Nexperia B.V. 2024. All rights reserved

13. Package outline

TSSOP24: plastic thin shrink small outline package; 24 leads; body width 4.4 mm **SOT355-1**

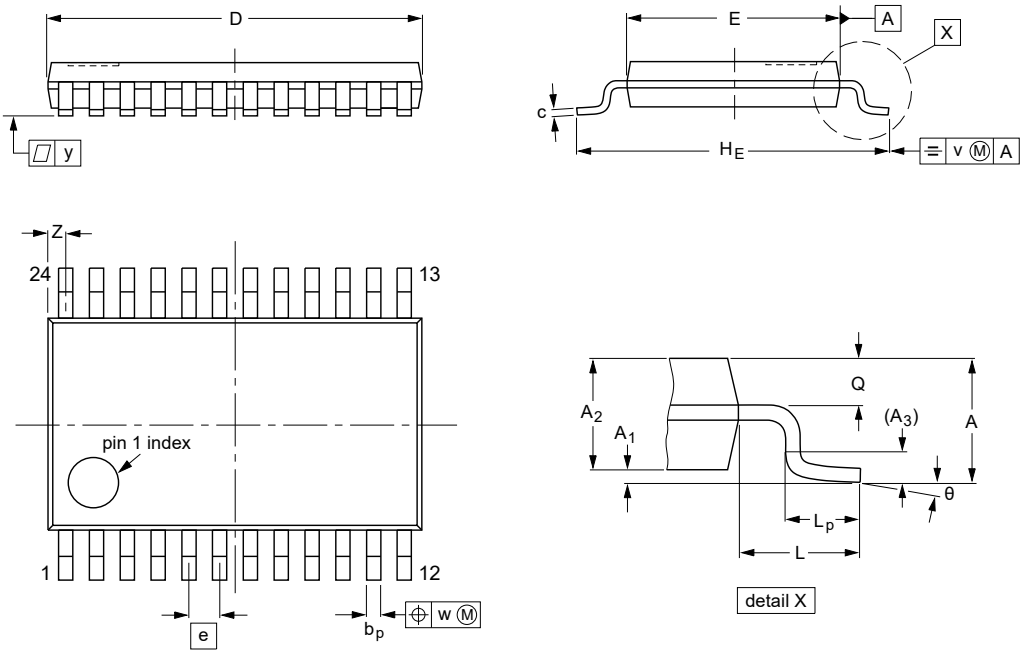

DIMENSIONS (mm are the original dimensions)

UNIT	A max.	A_1	A_2	A_3	b_p	c	$D^{(1)}$	$E^{(2)}$	e	H_E	L	L_p	Q	v	w	y	$Z^{(1)}$	θ
mm	1.1	0.15 0.05	0.95 0.80	0.25	0.30 0.19	0.2 0.1	7.9 7.7	4.5 4.3	0.65	6.6 6.2	1	0.75 0.50	0.4 0.3	0.2	0.13	0.1	0.5 0.2	8° 0°

Notes

1. Plastic or metal protrusions of 0.15 mm maximum per side are not included.
2. Plastic interlead protrusions of 0.25 mm maximum per side are not included.

OUTLINE VERSION	REFERENCES				EUROPEAN PROJECTION	ISSUE DATE
	IEC	JEDEC	JEITA			
SOT355-1		MO-153				~~99-12-27~~ 03-02-19

Fig. 9. Package outline SOT355-1 (TSSOP24)

All information provided in this document is subject to legal disclaimers.

© Nexperia B.V. 2024. All rights reserved

14. Abbreviations

Table 10. Abbreviations

Acronym	Description
ANSI	American National Standards Institute
CDM	Charged Device Model
CMOS	Complementary Metal-Oxide Semiconductor
DUT	Device Under Test
ESD	ElectroStatic Discharge
ESDA	ElectroStatic Discharge Association
HBM	Human Body Model
JEDEC	Joint Electron Device Engineering Council

15. Revision history

Table 11. Revision history

Document ID	Release date	Data sheet status	Change notice	Supersedes
74HC4514_Q100 v.2	20240805	Product data sheet	-	74HC4514_Q100 v.1
Modifications:	• Section 2: ESD specification updated according to the latest JEDEC standard.			
74HC4514_Q100 v.1	20220901	Product data sheet	-	-

All information provided in this document is subject to legal disclaimers.

© Nexperia B.V. 2024. All rights reserved

16. Legal information

Data sheet status

Document status [1][2]	Product status [3]	Definition
Objective [short] data sheet	Development	This document contains data from the objective specification for product development.
Preliminary [short] data sheet	Qualification	This document contains data from the preliminary specification.
Product [short] data sheet	Production	This document contains the product specification.

[1] Please consult the most recently issued document before initiating or completing a design.
[2] The term 'short data sheet' is explained in section "Definitions".
[3] The product status of device(s) described in this document may have changed since this document was published and may differ in case of multiple devices. The latest product status information is available on the internet at https://www.nexperia.com.

Definitions

Draft — The document is a draft version only. The content is still under internal review and subject to formal approval, which may result in modifications or additions. Nexperia does not give any representations or warranties as to the accuracy or completeness of information included herein and shall have no liability for the consequences of use of such information.

Short data sheet — A short data sheet is an extract from a full data sheet with the same product type number(s) and title. A short data sheet is intended for quick reference only and should not be relied upon to contain detailed and full information. For detailed and full information see the relevant full data sheet, which is available on request via the local Nexperia sales office. In case of any inconsistency or conflict with the short data sheet, the full data sheet shall prevail.

Product specification — The information and data provided in a Product data sheet shall define the specification of the product as agreed between Nexperia and its customer, unless Nexperia and customer have explicitly agreed otherwise in writing. In no event however, shall an agreement be valid in which the Nexperia product is deemed to offer functions and qualities beyond those described in the Product data sheet.

Disclaimers

Limited warranty and liability — Information in this document is believed to be accurate and reliable. However, Nexperia does not give any representations or warranties, expressed or implied, as to the accuracy or completeness of such information and shall have no liability for the consequences of use of such information. Nexperia takes no responsibility for the content in this document if provided by an information source outside of Nexperia.

In no event shall Nexperia be liable for any indirect, incidental, punitive, special or consequential damages (including - without limitation - lost profits, lost savings, business interruption, costs related to the removal or replacement of any products or rework charges) whether or not such damages are based on tort (including negligence), warranty, breach of contract or any other legal theory.

Notwithstanding any damages that customer might incur for any reason whatsoever, Nexperia's aggregate and cumulative liability towards customer for the products described herein shall be limited in accordance with the Terms and conditions of commercial sale of Nexperia.

Right to make changes — Nexperia reserves the right to make changes to information published in this document, including without limitation specifications and product descriptions, at any time and without notice. This document supersedes and replaces all information supplied prior to the publication hereof.

Suitability for use in automotive applications — This Nexperia product has been qualified for use in automotive applications. Unless otherwise agreed in writing, the product is not designed, authorized or warranted to be suitable for use in life support, life-critical or safety-critical systems or equipment, nor in applications where failure or malfunction of an Nexperia product can reasonably be expected to result in personal injury, death or severe property or environmental damage. Nexperia and its suppliers accept no liability for inclusion and/or use of Nexperia products in such equipment or applications and therefore such inclusion and/or use is at the customer's own risk.

Quick reference data — The Quick reference data is an extract of the product data given in the Limiting values and Characteristics sections of this document, and as such is not complete, exhaustive or legally binding.

Applications — Applications that are described herein for any of these products are for illustrative purposes only. Nexperia makes no representation or warranty that such applications will be suitable for the specified use without further testing or modification.

Customers are responsible for the design and operation of their applications and products using Nexperia products, and Nexperia accepts no liability for any assistance with applications or customer product design. It is customer's sole responsibility to determine whether the Nexperia product is suitable and fit for the customer's applications and products planned, as well as for the planned application and use of customer's third party customer(s). Customers should provide appropriate design and operating safeguards to minimize the risks associated with their applications and products.

Nexperia does not accept any liability related to any default, damage, costs or problem which is based on any weakness or default in the customer's applications or products, or the application or use by customer's third party customer(s). Customer is responsible for doing all necessary testing for the customer's applications and products using Nexperia products in order to avoid a default of the applications and the products or of the application or use by customer's third party customer(s). Nexperia does not accept any liability in this respect.

Limiting values — Stress above one or more limiting values (as defined in the Absolute Maximum Ratings System of IEC 60134) will cause permanent damage to the device. Limiting values are stress ratings only and (proper) operation of the device at these or any other conditions above those given in the Recommended operating conditions section (if present) or the Characteristics sections of this document is not warranted. Constant or repeated exposure to limiting values will permanently and irreversibly affect the quality and reliability of the device.

Terms and conditions of commercial sale — Nexperia products are sold subject to the general terms and conditions of commercial sale, as published at http://www.nexperia.com/profile/terms, unless otherwise agreed in a valid written individual agreement. In case an individual agreement is concluded only the terms and conditions of the respective agreement shall apply. Nexperia hereby expressly objects to applying the customer's general terms and conditions with regard to the purchase of Nexperia products by customer.

No offer to sell or license — Nothing in this document may be interpreted or construed as an offer to sell products that is open for acceptance or the grant, conveyance or implication of any license under any copyrights, patents or other industrial or intellectual property rights.

Export control — This document as well as the item(s) described herein may be subject to export control regulations. Export might require a prior authorization from competent authorities.

Translations — A non-English (translated) version of a document is for reference only. The English version shall prevail in case of any discrepancy between the translated and English versions.

Trademarks

Notice: All referenced brands, product names, service names and trademarks are the property of their respective owners.

All information provided in this document is subject to legal disclaimers.

© Nexperia B.V. 2024. All rights reserved

Contents

1. General description....1
2. Features and benefits....1
3. Applications....1
4. Ordering information....1
5. Functional diagram....2
6. Pinning information....4
6.1. Pinning....4
6.2. Pin description....4
7. Functional description....5
8. Limiting values....5
9. Recommended operating conditions....6
10. Static characteristics....6
11. Dynamic characteristics....7
11.1. Waveforms and test circuit....8
12. Application information....10
13. Package outline....11
14. Abbreviations....12
15. Revision history....12
16. Legal information....13

© **Nexperia B.V. 2024. All rights reserved**

For more information, please visit: http://www.nexperia.com
For sales office addresses, please send an email to: salesaddresses@nexperia.com
Date of release: 5 August 2024

Unikeyic Electronics

Global Electronic Components Distributor

Click to view pricing, inventory, delivery, and lifecycle information:

nexperia:

74HC4066D,653 BAS40XY,115 BZX84W-B2V4X BZX84W-B3V9X BZX8850S-C4V7-QYL 74LV4052D,118 74LVCH16245ADGVJ BZX8850S-C7V5-QYL NX1029XH 74LVC240AD,118 BZX84W-B12X NHDTC114YT-QR SZMM5Z22VT5GF 74AUP1T32GWH BZX84W-B20X 74HCT107D,652 NXB0108BQ-Q100X PBLS6003D,115 PDTC114YQC-QZ PMEG10020ELXE-QX PMLL4448,115 PSMN015-100YLX BZB84-B4V3,215 BZX384-C20,115 PESD4USB5UTBR-QX PMEG3020CPA-QX 74HC1G08GW,125 74HCT4051DB,112 74LV1T02GWH PMEG3002AEL-QYL