BSZ0911LSATMA1

N-SGT Enhancement Mode MOSFET

Description

The BSZ0911LSATMA1 use advanced SGT MOSFET technology to provide low RDS(ON), low gate charge, fast switching and excellent avalanche characteristics. This device is specially designed to get better ruggedness.

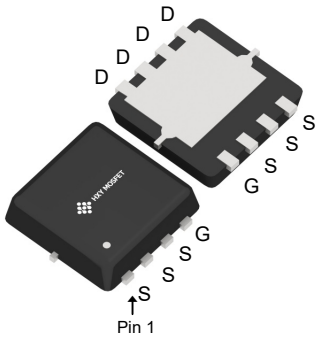

DFN3X3-8L

General Features

V_{DS} =30V I_D = 40A

$R_{DS(ON)}$ < 6.3mΩ@ V_{GS}=10V

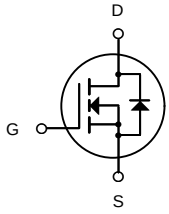

N-Channel MOSFET

Applications

Consumer electronic power supply Motor control

Synchronous-rectification Isolated DC

Synchronous-rectification applications

Package Marking and Ordering Information

Product ID	Pack	Brand	Qty(PCS)
BSZ0911LSATMA1	DFN3X3-8L	HXY MOSFET	5000

Absolute Maximum Ratings (T_C=25°C unless otherwise specified)

Symbol	Parameter	Rating	Units
V_{DS}	Drain-Source Voltage	30	V
V_{GS}	Gate-Source Voltage	±20	V
I_D@T_C=25℃	Continuous Drain Current, V_{GS} @ 10V[1]	40	A
I_D@T_C=100℃	Continuous Drain Current, V_{GS} @ 10V[1]	28	A
I_D@T_A=25℃	Continuous Drain Current, V_{GS} @ 10V[1]	27	A
I_D@T_A=70℃	Continuous Drain Current, V_{GS} @ 10V[1]	24	A
I_{DM}	Pulsed Drain Current[2]	135	A
EAS	Single Pulse Avalanche Energy[3]	29.8	mJ
I_{AS}	Avalanche Current	27	A
P_D@T_C=25℃	Total Power Dissipation[4]	30	W
T_{STG}	Storage Temperature Range	-55 to 150	°C
T_J	Operating Junction Temperature Range	-55 to 150	°C
$R_{\theta JA}$	Thermal Resistance Junction-ambient [1]	50	°C/W
$R_{\theta JC}$	Thermal Resistance Junction-Case[1]	4.6	°C/W

Electrical Characteristics(TJ=25°C unless otherwise noted)

Symbol	Parameter	Conditions	Min.	Typ.	Max.	Unit
BV_{DSS}	Drain-Source Breakdown Voltage	V_{GS}=0V , I_D=250uA	30	---	---	V
$R_{DS(ON)}$	Static Drain-Source On-Resistance[2]	V_{GS}=10V , I_D=20A	---	5	6.3	mΩ
		V_{GS}=4.5V , I_D=15A	---	6.9	9	
$V_{GS(th)}$	Gate Threshold Voltage	V_{GS}=V_{DS} , I_D =250uA	1.2	---	2.5	V
I_{DSS}	Drain-Source Leakage Current	V_{DS}=24V , V_{GS}=0V , T_J=25°C	---	---	1	uA
		V_{DS}=24V , V_{GS}=0V , T_J=55°C	---	---	5	
I_{GSS}	Gate-Source Leakage Current	V_{GS}=±20V , V_{DS}=0V	---	---	±100	nA
gfs	Forward Transconductance	V_{DS}=5V , I_D=20A	---	67	---	S
R_g	Gate Resistance	V_{DS}=0V , V_{GS}=0V , f=1MHz	---	1.7	---	Ω
Q_g	Total Gate Charge (4.5V)	V_{DS}=15V , V_{GS}=4.5V , I_D=15A	---	8	---	nC
Q_{gs}	Gate-Source Charge		---	2.4	---	
Q_{gd}	Gate-Drain Charge		---	3.2	---	
$T_{d(on)}$	Turn-On Delay Time	V_{DD}=15V , V_{GS}=10V , R_G=3.3Ω I_D=15A	---	7.1	---	ns
T_r	Rise Time		---	40	---	
$T_{d(off)}$	Turn-Off Delay Time		---	15	---	
T_f	Fall Time		---	6	---	
C_{iss}	Input Capacitance	V_{DS}=15V , V_{GS}=0V , f=1MHz	---	814	---	pF
C_{oss}	Output Capacitance		---	498	---	
C_{rss}	Reverse Transfer Capacitance		---	41	---	
I_S	Continuous Source Current[1,6]	V_G=V_D=0V , Force Current	---	---	40	A
V_{SD}	Diode Forward Voltage[2]	V_{GS}=0V , I_S=1A , T_J=25°C	---	---	1	V
t_{rr}	Reverse Recovery Time	I_F=20A , di/dt=100A/μs , T_J=25°C	---	15	---	nS
Q_{rr}	Reverse Recovery Charge		---	25	---	nC

Note :
1.The data tested by surface mounted on a 1 inch^2 FR-4 board with 2OZ copper.
2.The data tested by pulsed , pulse width ≦ 300us , duty cycle ≦ 2%
3.The EAS data shows Max. rating . The test condition is V_{DD}=25V,V_{GS}=10V,L=0.1mH,I_{AS}=24A
4.The power dissipation is limited by 150°C junction temperature
5.The data is theoretically the same as I_D and I_{DM} , in real applications , should be limited by total power dissipation.

Typical Characteristics

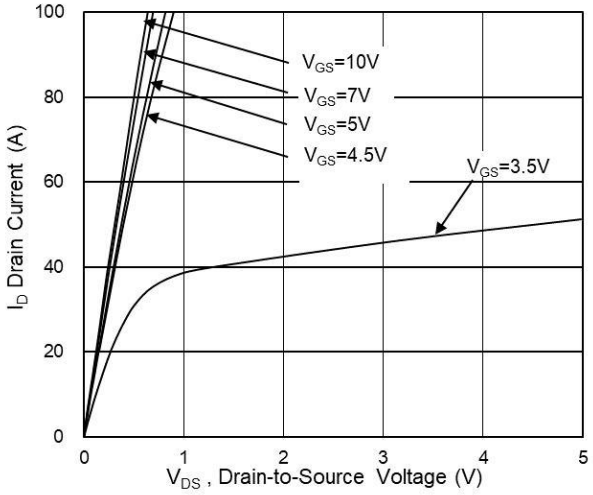

Fig.1 Typical Output Characteristics

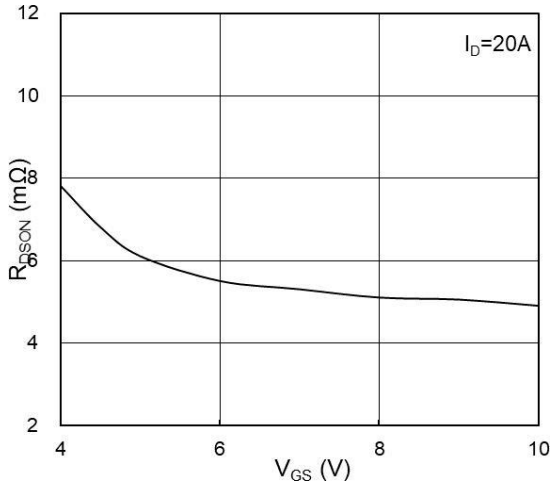

Fig.2 On-Resistance vs G-S Voltage

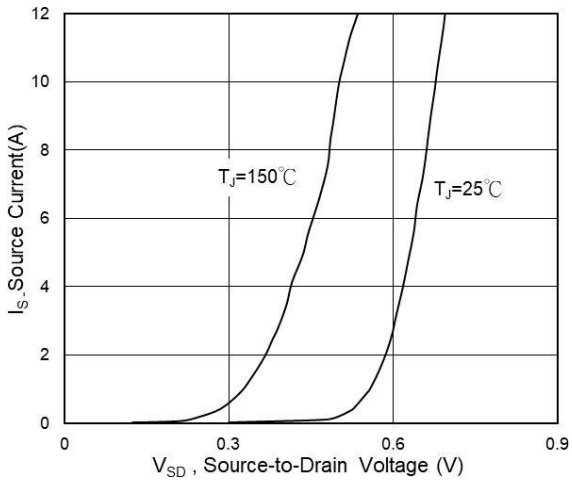

Fig.3 Source Drain Forward Characteristics

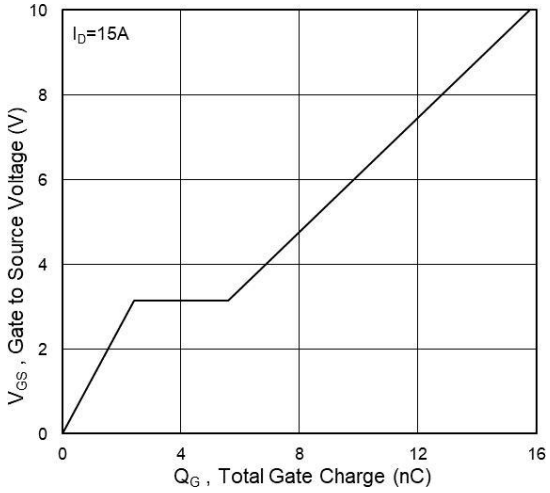

Fig.4 Gate-Charge Characteristics

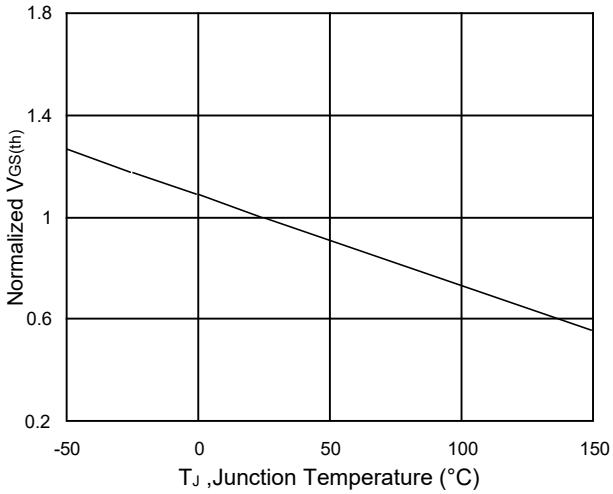

Fig.5 Normalized $V_{GS(th)}$ vs T_J

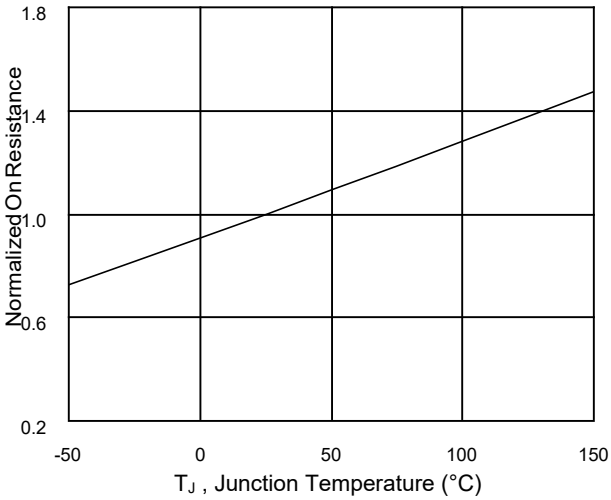

Fig.6 Normalized R_{DSON} vs T_J

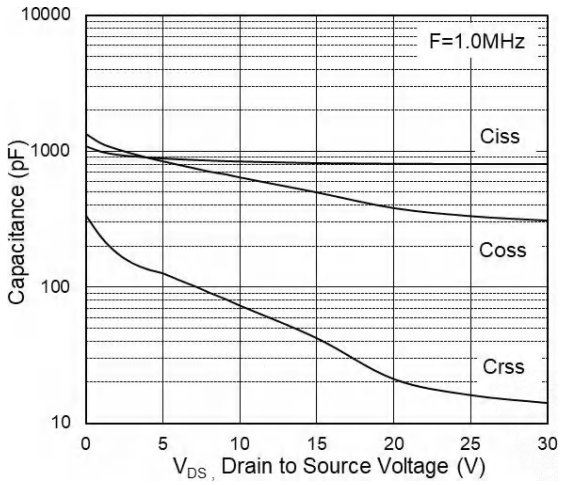

Fig.7 Capacitance

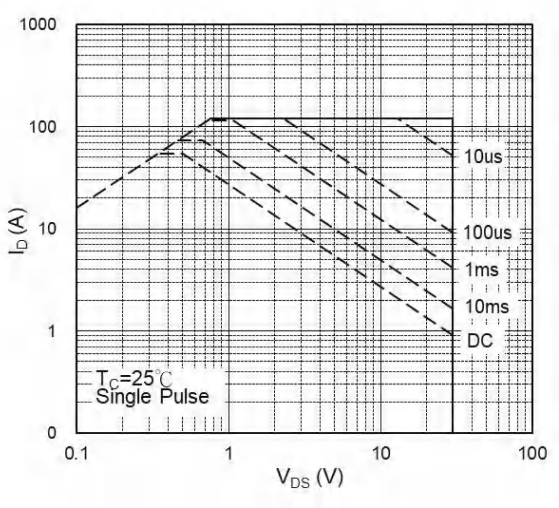

Fig.8 Safe Operating Area

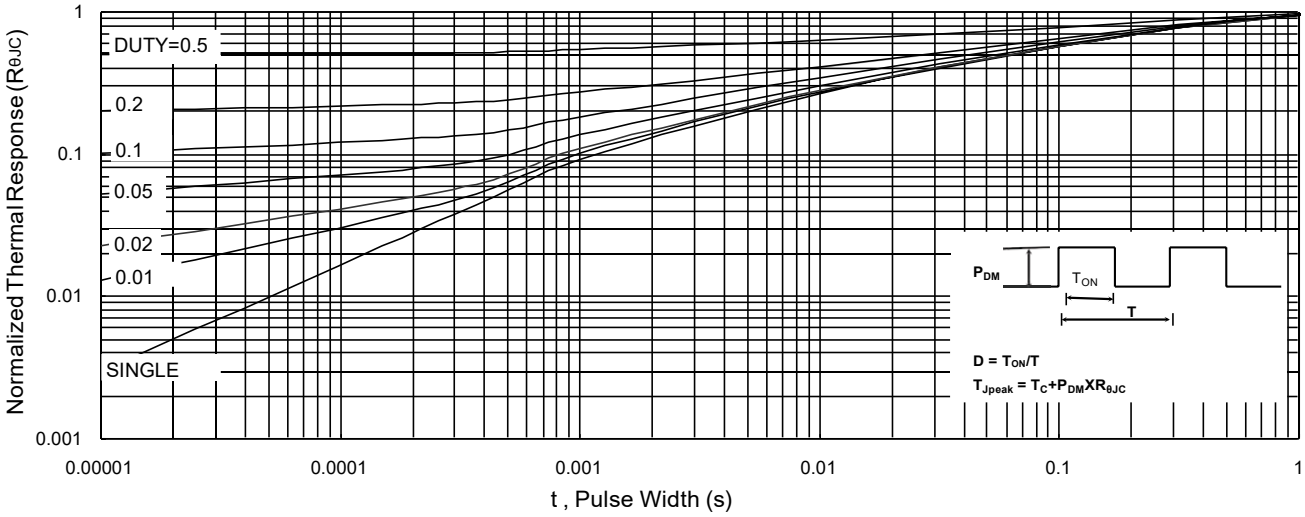

Fig.9 Normalized Maximum Transient Thermal Impedance

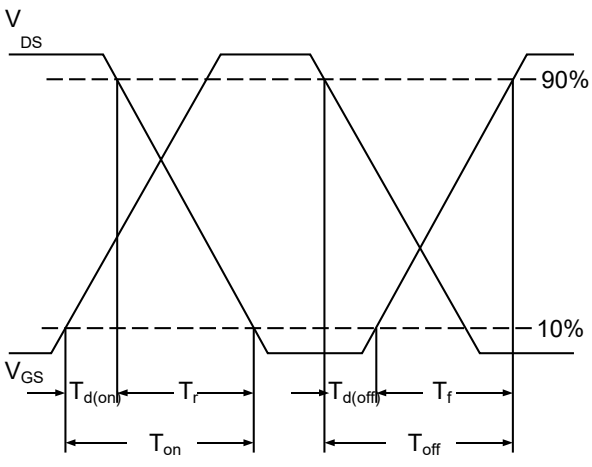

Fig.10 Switching Time Waveform

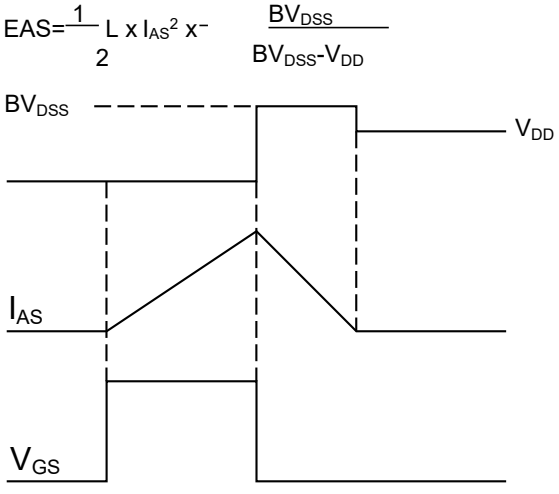

Fig.11 Unclamped Inductive Switching Waveform

DFN3X3-8L Package Information

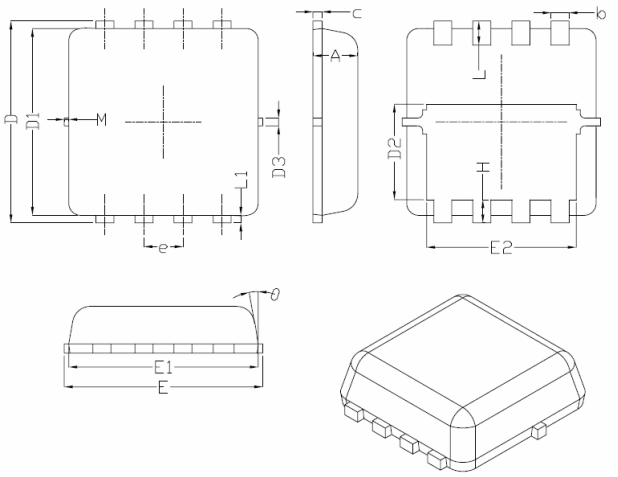

Symbol	Dimensions In Millimeters		
	Min.	Nom.	Max.
A	0.70	0.75	0.80
b	0.25	0.30	0.35
c	0.10	0.15	0.25
D	3.25	3.35	3.45
D1	3.00	3.10	3.20
D2	1.48	1.58	1.68
D3	-	0.13	-
E	3.20	3.30	3.40
E1	3.00	3.15	3.20
E2	2.39	2.49	2.59
e	0.65BSC		
H	0.30	0.39	0.50
L	0.30	0.40	0.50
L1	-	0.13	-
M	*	*	0.15
θ		10°	12°

Attention

■ Any and all HUA XUAN YANG ELECTRONICS products described or contained herein do not have specifications that can handle applications that require extremely high levels of reliability, such as life-support systems, aircraft's control systems, or other applications whose failure can be reasonably expected to result in serious physical and/or material damage. Consult with your HUA XUAN YANG ELECTRONICS representative nearest you before using any HUA XUAN YANG ELECTRONICS products described or contained herein in such applications.

■ HUA XUAN YANG ELECTRONICS assumes no responsibility for equipment failures that result from using products at values that exceed, even momentarily, rated values (such as maximum ratings, operating condition ranges, or other parameters) listed in products specifications of any and all HUA XUAN YANG ELECTRONICS products described or contained herein.

■ Specifications of any and all HUA XUAN YANG ELECTRONICS products described or contained herein stipulate the performance, characteristics, and functions of the described products in the independent state, and are not guarantees of the performance, characteristics, and functions of the described products as mounted in the customer's products or equipment. To verify symptoms and states that cannot be evaluated in an independent device, the customer should always evaluate and test devices mounted in the customer's products or equipment.

■ HUA XUAN YANG ELECTRONICS CO.,LTD. strives to supply high-quality high-reliability products. However, any and all semiconductor products fail with some probability. It is possible that these probabilistic failures could
give rise to accidents or events that could endanger human lives, that could give rise to smoke or fire, or that could cause damage to other property. When designing equipment, adopt safety measures so that these kinds of accidents or events cannot occur. Such measures include but are not limited to protective circuits and error prevention circuits for safe design, redundant design, and structural design.

■ In the event that any or all HUA XUAN YANG ELECTRONICS products(including technical data, services) described or contained herein are controlled under any of applicable local export control laws and regulations, such products must not be exported without obtaining the export license from the authorities concerned in accordance with the above law.

■ No part of this publication may be reproduced or transmitted in any form or by any means, electronic or mechanical, including photocopying and recording, or any information storage or retrieval system, or otherwise, without the prior written permission of HUA XUAN YANG ELECTRONICS CO.,LTD.

■ Information (including circuit diagrams and circuit parameters) herein is for example only ; it is not guaranteed for volume production. HUA XUAN YANG ELECTRONICS believes information herein is accurate and reliable, but no guarantees are made or implied regarding its use or any infringements of intellectual property rights or other rights of third parties.

■ Any and all information described or contained herein are subject to change without notice due to product/technology improvement, etc. When designing equipment, refer to the "Delivery Specification" for the HUA XUAN YANG ELECTRONICS product that you intend to use.

Unikeyic Electronics

Global Electronic Components Distributor

Click to view pricing, inventory, delivery, and lifecycle information:

HXY MOSFET:

BZT52C3V3S HXY2101EI SQJA04EP-T1_BE3 HAD8542ARZ MMBT3904T P6SMB33CA HC4D20120A P6SMB200A PESD5V0S1BB SS510C TPSMB28A-VR DTC143ZE HC3D10170A HT7540-1 MAX487ESA P6SMB36CA SS10100 SS1045 US2M BZT52C13 HESDNC5VB1AF-B IRLML6246PBF TPSMB100CA-VR HXY8205ES HOPA2340UA HT7150 HMCP602-I/SN HXY2300MI SD15C SS5150B