DESCRIPTION: 862 SERIES // 2PC M12 PCB VERT MOUNT // F // 3P-5P

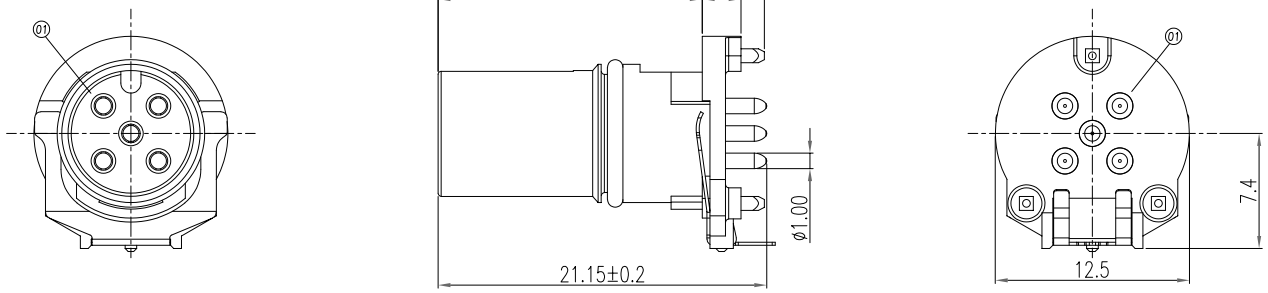

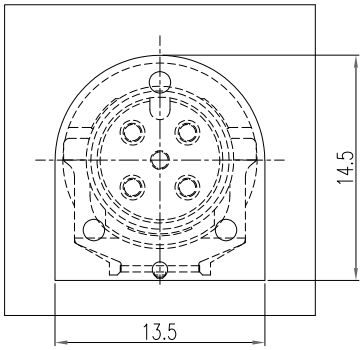

Component side (front view)
Recommended keepout area on the circuit board

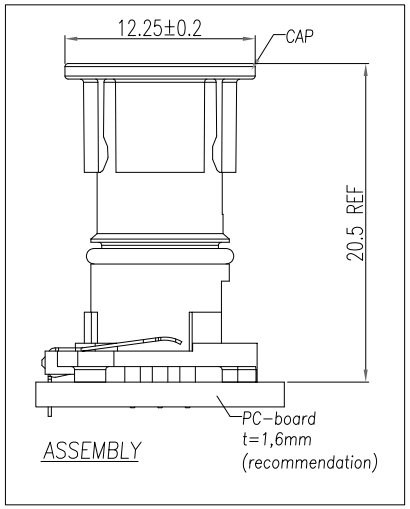

SPECIFICATIONS:

MATERIALS:

HOUSING:	PA9T, UL94 V-0, BLACK
CONTACTS:	GOLD FLASH PLATED BRASS
GROUND:	NICKEL PLATED PHOSPHOR BRONZE
ORING:	VITON
CAP:	PA66

ELECTRICAL:

RATED CURRENT:	4A
RATED VOLTAGE:	3P & 4P => 250V // 5P => 60V
INSULATION RESISTANCE:	100 MOhms MIN.
CONTACT RESISTANCE:	10 mOhms MAX.

ENVIRONMENT:

OPERATING TEMPERATURE:	-40°C TO +85°C
WATER PROOF:	IP67 (Mated Condition)

NORCOMP 3P MATING PART NUMBERS:

858-003-103RKT4*
858-R03-103RLU4*
858-R03-103RSS4*
*Also all material and contact plating variants

MUST PURCHASE PART NUMBER
"862-F-SHELL" SEPARATELY

862-00Y-213R001

003 = 3 POSITION
004 = 4 POSITION
005 = 5 POSITION

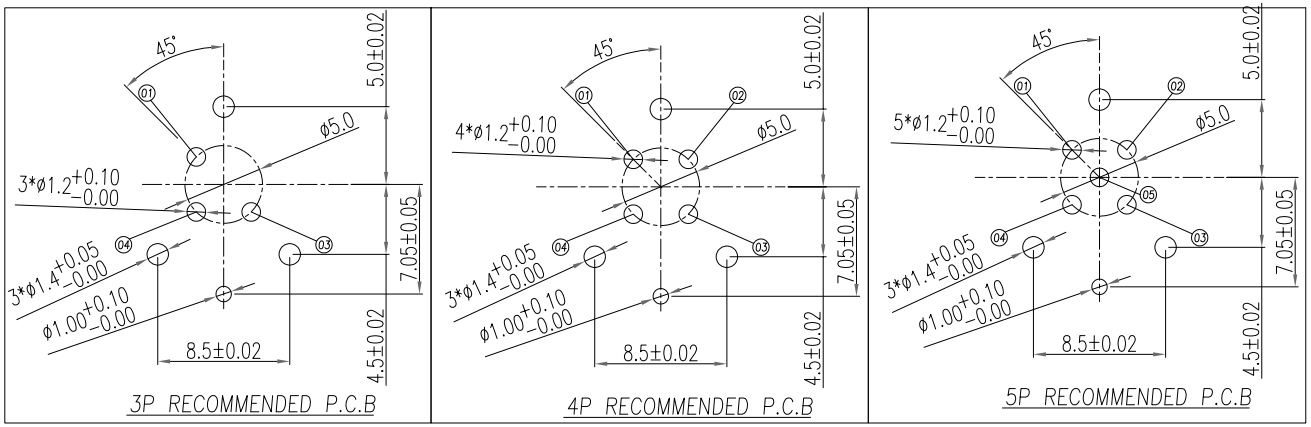

RoHS COMPLIANT

UNITS = mm

DO NOT SCALE FROM DRAWING

THESE DRAWINGS AND SPECIFICATIONS ARE THE PROPERTY OF NorComp AND SHALL NOT BE REPRODUCED, COPIED OR USED AS THE BASIS FOR THE MANUFACTURE OR SALE OF APPARATUS WITHOUT WRITTEN PERMISSION.

DRAWN:	J. KADEL
DATE:	03/18/2024

NorComp

SCALE:	SHEET	OF	REV
NTS	1	2	0

DWG NO. 862-00Y-213R001

DESCRIPTION: 862 SERIES // 2PC M12 PCB VERT MOUNT // F // 3P-5P

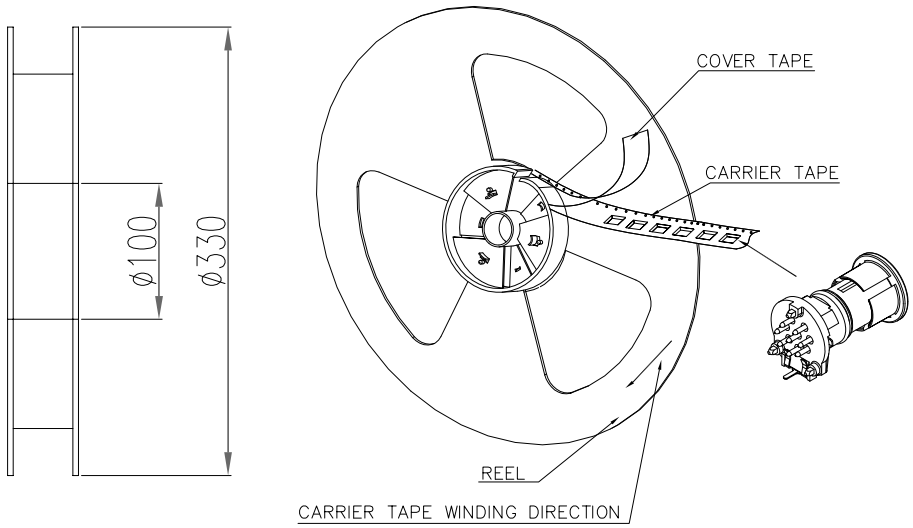

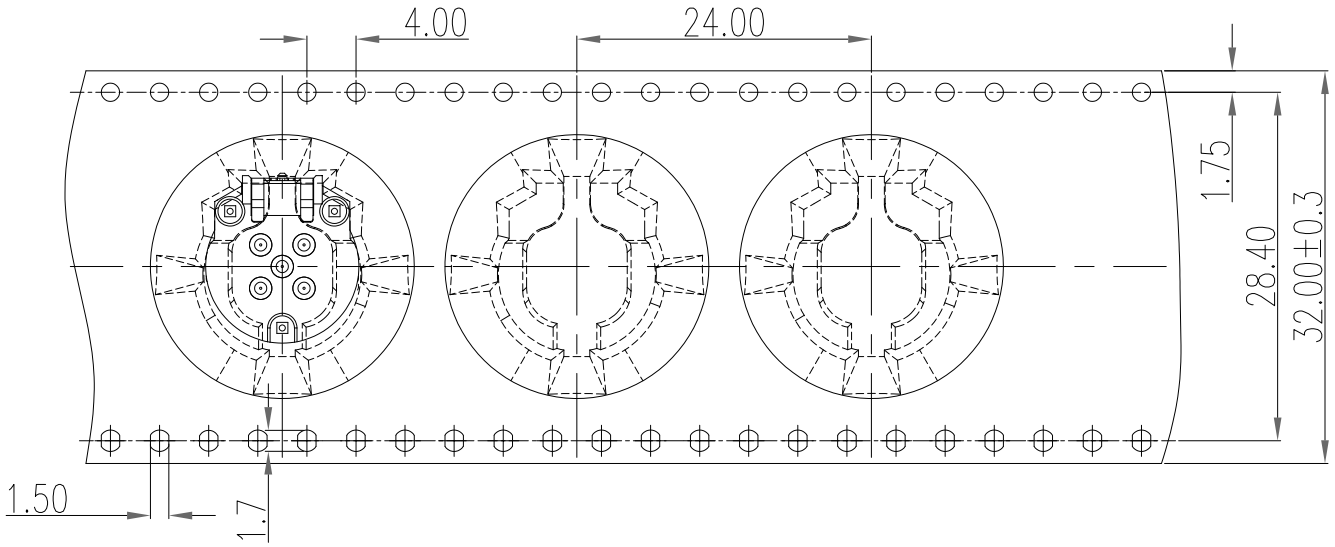

The tape size complies with the (EIA-481-D) specification requirements.

RoHS COMPLIANT

UNITS = mm

DO NOT SCALE FROM DRAWING

THESE DRAWINGS AND SPECIFICATIONS ARE THE PROPERTY OF NorComp AND SHALL NOT BE REPRODUCED, COPIED OR USED AS THE BASIS FOR THE MANUFACTURE OR SALE OF APPARATUS WITHOUT WRITTEN PERMISSION.

DRAWN:	DATE:
J. KADEL	03/18/2024

NorComp

SCALE:	SHEET	OF	REV
NTS	2	2	0

DWG NO. 862-00Y-213R001

Unikeyic Electronics

Global Electronic Components Distributor

Click to view pricing, inventory, delivery, and lifecycle information:

NorComp:

CCA-000-M03R215 CCA-015-M.5R152 8P1P003200GRB01 180-044-173L020 822B006-273L501 CDFS17W2103L411 S58-A04-MMR001 Y54-A04-MFFR001 178-015-313R491 SFP67SS25 T54-B05-FFFR001 852-002-113R004 858-R03-103RSS4 SFP6715 HDF-R44-213L011 SDF-R37-113L461 970-025-030R121 GCHDLPF15M15F SDF-V09-213L011 T58-D04-MMMR001 8P1P005210GRBR1 8P1P01417BGL521 171-037-213R001 180-026-203L031 680S3W3103L201 820B007-203RF01 HDF-R15-113L461 172-025-113R021 181-044-113R531 8P1P00217BGL521