

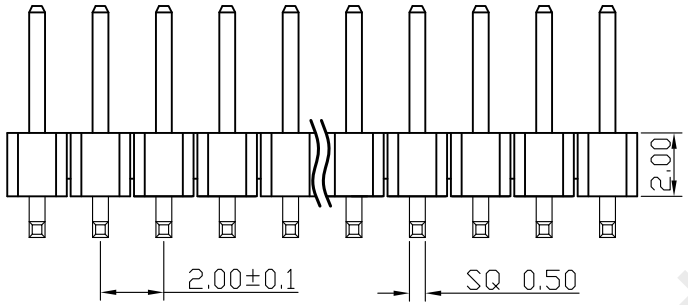

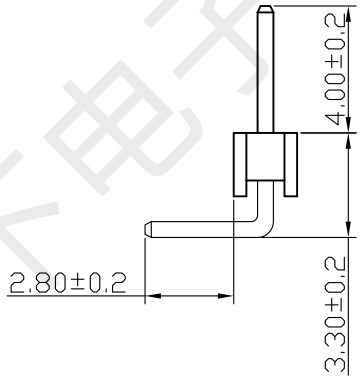

SPECIFICATIONS

Current Rating: 1.5 Amps
Insulation Resistance: 1000MΩ Min
Contact Resistance: 20mΩ Max
Withstanding Voltage: AC 500V
Operation Temperature: -40° to+105°
Contact Material: Brass
Standard: PA6T
Insrlator Material: Polyester(UL 94V-0)
Contact Plating: Gold Flash
Max.Processing Temp: 240° C for30-60seconds
(260° C for5seconds)

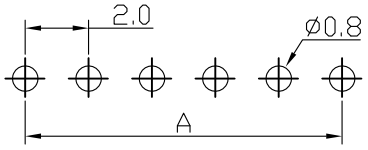

RECOMMEND P.C.B LAYOUT
PCB TOLERANCE:±0.05 (TOP VIEW)

深圳市韩下电子有限公司

No. of	DIM. A	DIM. B	No. of	DIM. A	DIM. B	No. of	DIM. A	DIM. B	No. of	DIM. A	DIM. B
1	0.00	2.00	11	20.00	22.00	21	40.00	42.00	31	60.00	62.00
2	2.00	4.00	12	22.00	24.00	22	42.00	44.00	32	62.00	64.00
3	4.00	6.00	13	24.00	26.00	23	44.00	46.00	33	64.00	66.00
4	6.00	8.00	14	26.00	28.00	24	46.00	48.00	34	66.00	68.00
5	8.00	10.00	15	28.00	30.00	25	48.00	50.00	35	68.00	70.00
6	10.00	12.00	16	30.00	32.00	26	50.00	52.00	36	70.00	72.00
7	12.00	14.00	17	32.00	34.00	27	52.00	54.00	37	72.00	74.00
8	14.00	16.00	18	34.00	36.00	28	54.00	56.00	38	74.00	76.00
9	16.00	18.00	19	36.00	38.00	29	56.00	58.00	39	76.00	78.00
10	18.00	20.00	20	38.00	40.00	30	58.00	60.00	40	78.00	80.00

深圳市韩下电子有限公司

UNLESS OTHEWIXE SPECIFIED TOLERANCE
X :±0.30 X° :±5°
X.X :±0.25 X.X° :±1°
X.XX:±0.20 X.XX° :±0.5°

DRAWM NAME: HX PZ2.0-1x7P WZ-AM

SIZE	A4	SCALE	N:1	PROUCT NO.			
REV	A	UNIT	mm	PROJECT		PAGE	1/1

DRAWN:	黄彬 2022/04/24	CHECKED:	张伟 2022/04/24	APPROVED:	罗小春 2022/04/24

深圳市韩下电子有限公司
Shenzhen Hanxia Electronic Co., Ltd
Tel: 0755-23086569

承　认　书

SPECIFICATION FOR APPROVAL

产 品 编 码
Material code: _____

产品名称 Project：排针

规格型号 Part No：HX PZ2.0-1x7P WZ-AM

贵公司承认印 Approal slgnatures

料 号/Part No.	签　章/Signatures

日期 Date:

拟制/Drawn	黄彬	深圳市韩下电子有限公司 工程专用章
审核/Check	张伟	
批准/Approved	罗小春	

深圳市韩下电子有限公司