# SAC-4PY-FT/MT-FT F VP SH - Y distributor

1080245

https://www.phoenixcontact.com/us/products/1080245

Please be informed that the data shown in this PDF document is generated from our online catalog. Please find the complete data in the user documentation. Our general terms of use for downloads are valid.



Y distributor, 4-position, shielded, Plug straight M12, coding: T, on Socket straight M12, coding: T and Socket straight M12, coding: T, for direct current up to 16 A/63 V, Parallel distributor

## Your advantages

- High-performance: DC connectors for up to 16 A and 63 V DC

## Commercial data

| | |
|---|---|
| Item number | 1080245 |
| Packing unit | 1 pc |
| Minimum order quantity | 1 pc |
| Sales key | BF10 |
| Product key | BF1GAP |
| GTIN | 4055626802589 |
| Weight per piece (including packing) | 99.3 g |
| Weight per piece (excluding packing) | 99.3 g |
| Customs tariff number | 85366990 |
| Country of origin | DE |

## Technical data

### Notes

| | |
|---|---|
| Assembly note | NOTE: Observe the permissible bending radii when routing cables, since the degree of protection may be at risk if the bending forces are too high. Reduce mechanical loads upstream of the connector, e.g., by using cable ties. |
| Notes on the product family | UL approval in preparation |

### Product properties

| | |
|---|---|
| Product type | Y-distributor |
| Application | Power supply |
| Number of positions | 4 |
| No. of cable outlets | 2 |
| Shielded | yes |
| Coding | T |
| Thread type | M12 |

Data management status

| | |
|---|---|
| Article revision | 00 |

Insulation characteristics

| | |
|---|---|
| Overvoltage category | III |
| Degree of pollution | 3 |

### Electrical properties

| | |
|---|---|
| Nominal voltage $U_N$ | 63 V DC |
| Nominal current $I_N$ | 16 A (at 40 °C) |

### Signaling

| | |
|---|---|
| Status display | no |
| Status display present | No |

### Dimensions

| | |
|---|---|
| Dimensional drawing | 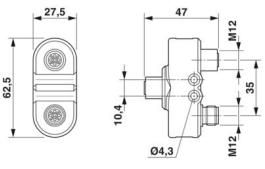 |
| Width | 28 mm |
| Height | 47 mm |
| Length | 62.5 mm |
| Center distance | 35 mm |

### Material specifications

| | |
|---|---|
| Material | CuZn (Pin contact) |
| | (Female contact) |
| Flammability rating according to UL 94 | V0 |
| Seal material | NBR |
| Material of grip body | PBT |
| Contact surface material | Au |
| Contact carrier material | PBT |
| Material for screw connection | Brass, nickel-plated |

## Connector

Connection 1

| | |
|---|---|
| Type | Plug straight M12 |
| Coding type | T |

Connection 2

| | |
|---|---|
| Type | Socket straight M12 |
| Coding type | T |

Connection 3

| | |
|---|---|
| Type | Socket straight M12 |
| Coding type | T |

## Mechanical properties

Mechanical data

| | |
|---|---|
| Insertion/withdrawal cycles | > 100 |

## Environmental and real-life conditions

Ambient conditions

| | |
|---|---|
| Degree of protection | IP65 |
| Ambient temperature (operation) | -40 °C ... 85 °C (Plug / socket) |

## Standards and regulations

| | |
|---|---|
| Standard designation | M12 connector |
| Standards/specifications | IEC 61076-2-111 |

## Drawings

Dimensional drawing

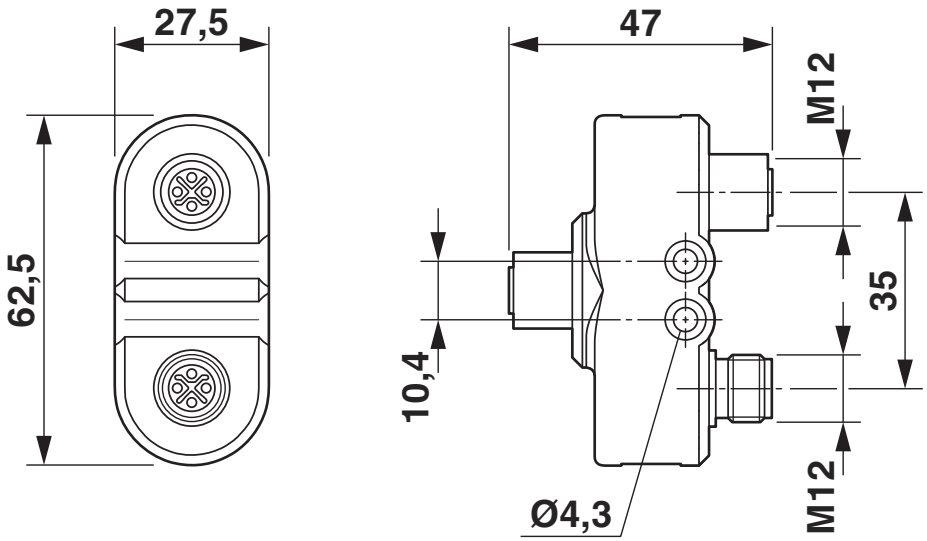


M12 Y distributor

Schematic diagram

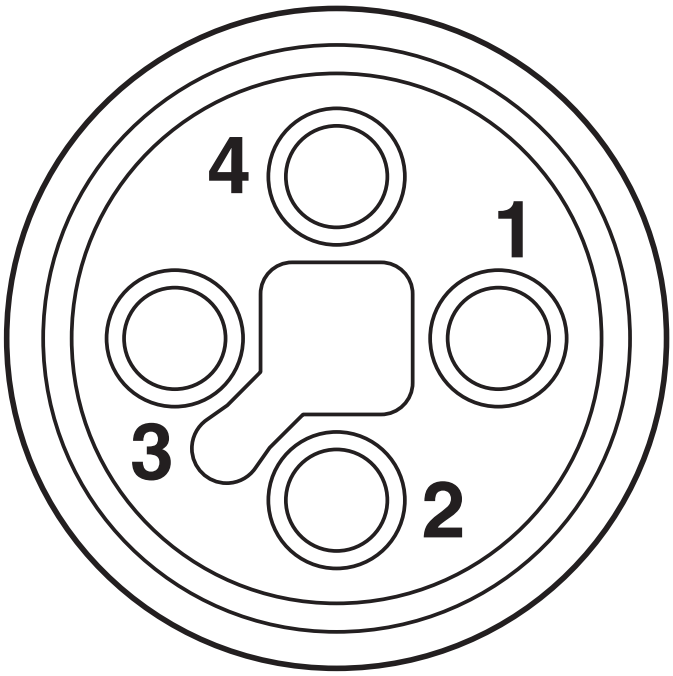


Pin assignment of M12 socket, 4-pos., T-coded, socket side view

Circuit diagram

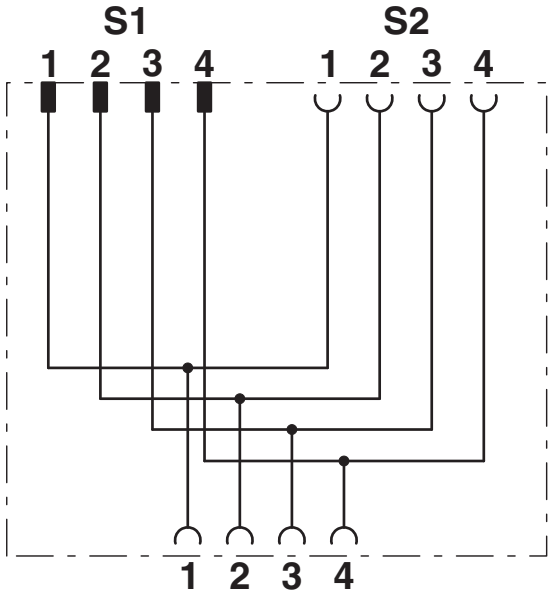


Schematic diagram

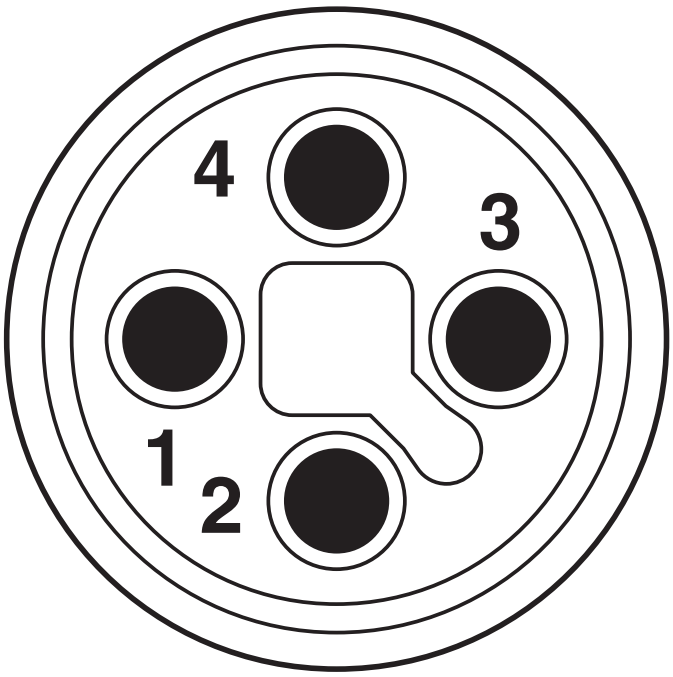


Pin assignment for M12 plug, 4-pos., T-coded, view of plug side

Diagram

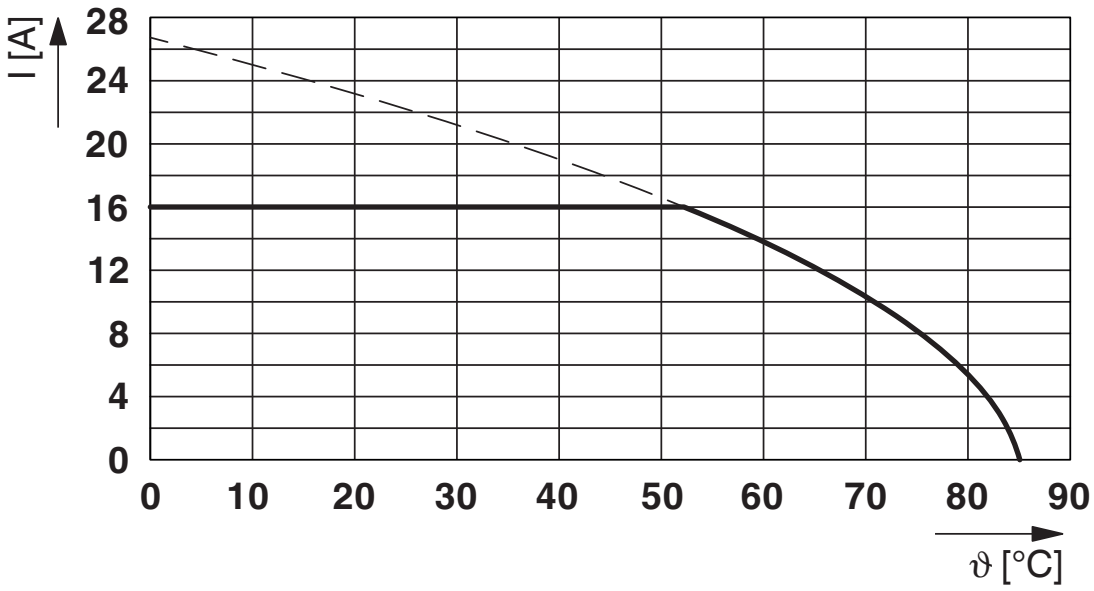


Current carrying capacity

## Classifications

### ECLASS

| | |
|---|---|
| ECLASS-11.0 | 27440106 |
| ECLASS-12.0 | 27440106 |
| ECLASS-13.0 | 27440106 |

### ETIM

| | |
|---|---|
| ETIM 9.0 | EC002925 |

### UNSPSC

| | |
|---|---|
| UNSPSC 21.0 | 31251500 |

## Environmental product compliance

EU RoHS

| | |
|---|---|
| Fulfills EU RoHS substance requirements | Yes, No exemptions |

China RoHS

| | |
|---|---|
| Environment friendly use period (EFUP) | EFUP-E |
| | No hazardous substances above the limits |

EU REACH SVHC

| | |
|---|---|
| REACH candidate substance (CAS No.) | No substance above 0.1 wt% |

## Accessories

### UCT-EM (7X10) - Snap-in markers

0830765

https://www.phoenixcontact.com/us/products/0830765



Snap-in markers, Sheet, white, unlabeled, can be labeled with: TOPMARK NEO, TOPMARK LASER, BLUEMARK ID COLOR, BLUEMARK ID, BLUEMARK CLED, THERMOMARK PRIME, THERMOMARK CARD 2.0, THERMOMARK CARD, mounting type: snapped, lettering field size: 7 x 10 mm, Number of individual labels: 30


Phoenix Contact 2024 © - all rights reserved
https://www.phoenixcontact.com



Phoenix Contact USA
586 Fulling Mill Road
Middletown, PA 17057, United States
(+717) 944-1300
info@phoenixcon.com