REV.	ECN NO.	DATE	SIGN	DESCRIPTION
B	LEN-9C0058	2009/12/01	Kevin	Change Pin Assignments

ALTW
DCC. DEPT.
CONFIENDIAL
2012-06-01
ISSUED

With Liquid Glue
點防水膠

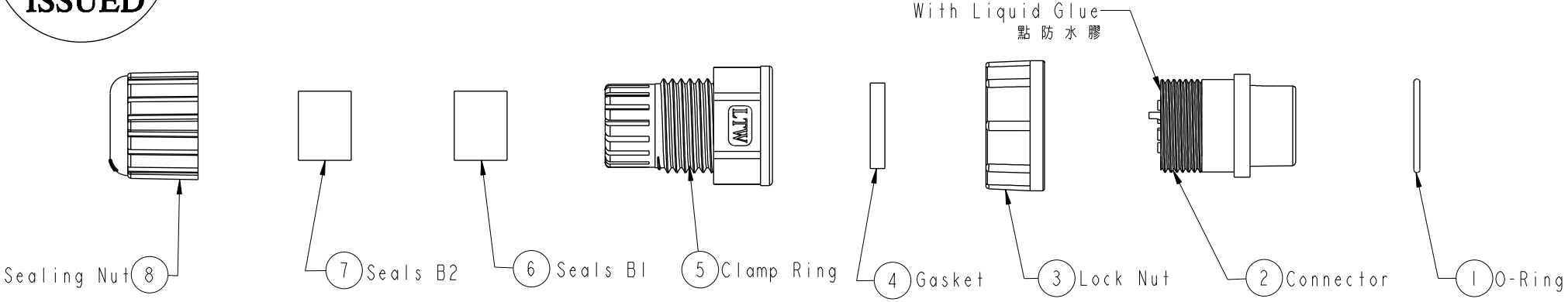

ALTW
CONFIDENTIAL
2012-04-16
R&D DEPT.

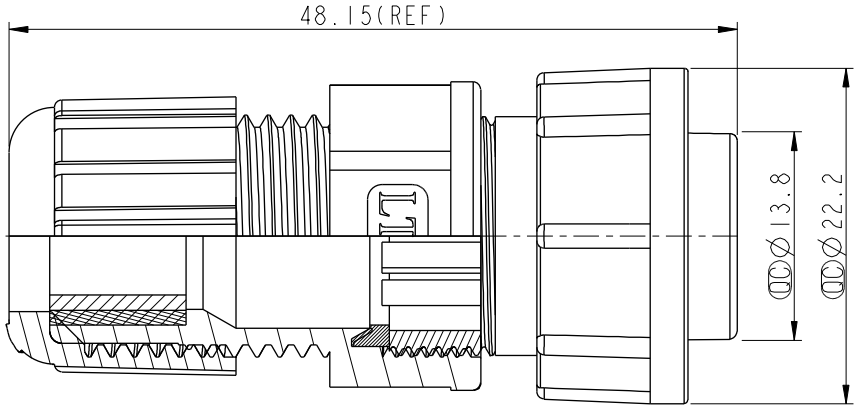

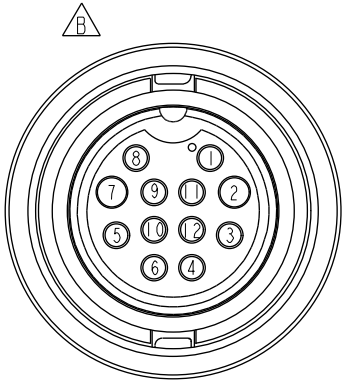

Note:
* QC Important Dimension To Check.
* Waterproof Rate: IP67
* Connector: Nylon+GF, Black
* Male Pin: Copper Alloy, Gold Plated
* Lock Nut: Nylon+GF, Black.
* O-Ring: EPDM, Black.
* Gasket: Silicone, Black
* Clamp Ring: Nylon, Black
* Sealing-Nut: Nylon, Black.
* Seals: EPDM, Black
* Seals B1 for Cable OD: ∅7.6mm~∅9.6mm
* Seals B2 for Cable OD: ∅4.0mm~∅7.6mm
* One Set Unassembled in One PE Bag.
（每一組未組裝,放置於一個PE袋,並封口）

UNIT:mm

TOLERANCE
.X ±0.25
.XX ±0.1
.XXX ±0.05
ANGLES ±1°

TITLE: 12Pin Female Connector Male Pin(5A+2A)
SCALE: 1:1 | SIZE: A4 | SHEET: 1 OF 1
REV.: B | WC-REV.: A.2 | QC: Inspection item

Amphenol LTW
安費諾亮泰企業股份有限公司

ITEM NO	DRAWN BY	DATE
CDU-12BFMA-LL7001	SamChang	2012-04-16
DWG NO: CDU-12BFMA-LL7001	CHECKED BY: Jeffrey	DATE: 2012-06-01
CUSTOMER: ALTW	APPROVED BY: Lion	DATE: 2012-06-01

FMW10702-01-02A1

THIS DOCUMENT IS SUBJECT TO CHANGE WITHOUT NOTICE. IT IS CONFIDENTIAL AND A PROPERTY OF Amphenol LTW. DISCLOSURE TO THIRD PARTY HAS TO BE AUTHORIZED BY Amphenol LTW.

Unikeyic Electronics

Global Electronic Components Distributor

Click to view pricing, inventory, delivery, and lifecycle information:

Amphenol:

54202-S08-07LF 69192-408HLF 70218-1116LF 86093968191755E3LF 86093968813H45V1LF LD25S33E4GV00LF RJE061661210 65781-158 86093967896755LF 91614-403ALF 67996-204HLF 70234-112LF 70430-164LF DCMF37P 68001-108HLF 76384-316LF D15P13A6RV12LF 54202-G0805CLF 68000-236HLF 86130202123355E1LF CD15S13E4RV09LF LD15P33E4GV00LF RJSBE5080C2 68001-200HLF 68002116HLF 863013A DAPO15S365TLF 86093488314745V1LF 95157-140LF DEM09P032N