Inductive slot sensor

SJ3,5-N-Y33714

- 3.5 mm slot width

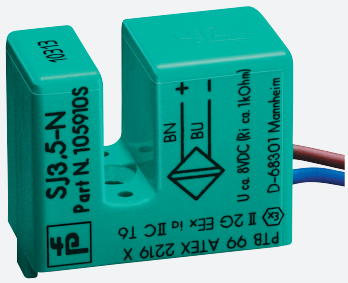

Dimensions

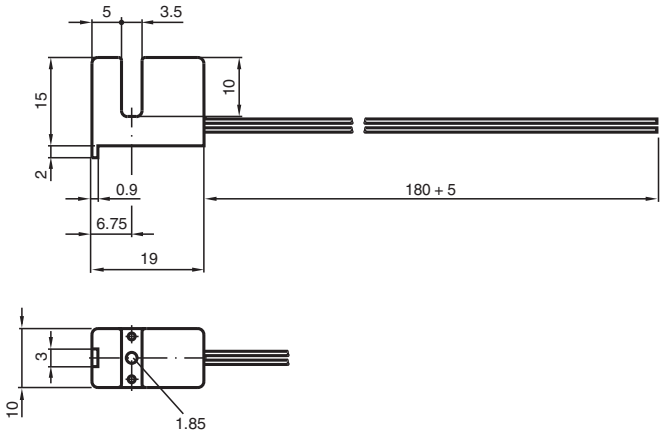

Technical Data

General specifications		
Switching function		Normally closed (NC)
Output type		NAMUR
Slot width		3.5 mm
Depth of immersion (lateral)		5 ... 7 typ. 6 mm
Output type		2-wire
Nominal ratings		
Nominal voltage	U_o	8.2 V (R_i approx. 1 kΩ)
Operating voltage	U_B	5 ... 25 V
Switching frequency	f	0 ... 3000 Hz
Hysteresis	H	0.41 ... 0.6 mm
Suitable for 2:1 technology		yes , Reverse polarity protection diode not required
Current consumption		
Measuring plate not detected		≥ 3 mA at nominal voltage
Measuring plate detected		≤ 1 mA at nominal voltage
Functional safety related parameters		
$MTTF_d$		13520 a

Release date: 2024-05-27 Date of issue: 2024-05-31 Filename: 70132994_eng.pdf

Technical Data

Mission Time (T_M)		20 a
Diagnostic Coverage (DC)		0 %
Compliance with standards and directives		
Standard conformity		
NAMUR		EN 60947-5-6:2000 IEC 60947-5-6:1999
Standards		EN IEC 60947-5-2
Approvals and certificates		
IECEx approval		
Equipment protection level Gb		IECEx PTB 11.0091X
Equipment protection level Da		IECEx PTB 11.0091X
Equipment protection level Mb		IECEx PTB 11.0091X
ATEX approval		
Equipment protection level Gb		PTB 99 ATEX 2219 X
Equipment protection level Da		PTB 99 ATEX 2219 X
UL approval		cULus Listed, General Purpose
CCC approval		
Hazardous Location		2020322315002306
NEPSI approval		
NEPSI certificate		GYJ16.1391X
Ambient conditions		
Ambient temperature		-25 ... 100 °C (-13 ... 212 °F)
Mechanical specifications		
Connection type		flexible leads LiY
Housing material		PBT
Degree of protection		IP67
Cable		
Cable diameter		1.1 mm ± 0.1 mm
Bending radius		> 10 x cable diameter
Material		PVC
Core cross section		0.14 mm^2
Length	L	180 mm
Dimensions		
Height		15 mm
Width		10 mm
Length		19.5 mm
General information		
Use in the hazardous area		see instruction manuals

Connection

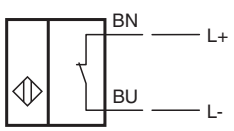

Release date: 2024-05-27 Date of issue: 2024-05-31 Filename: 70132994_eng.pdf