Dimensions: [mm]

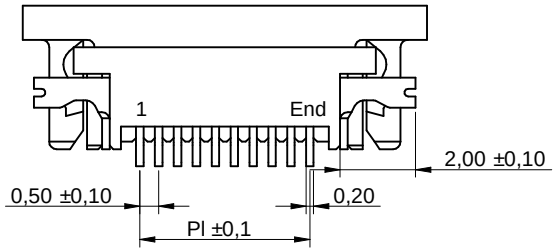

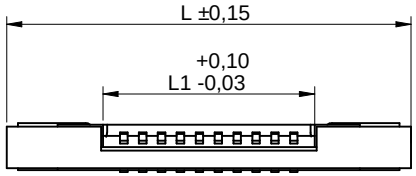

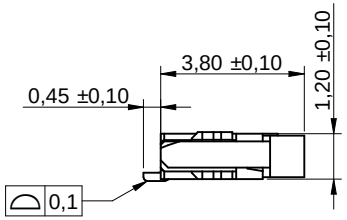

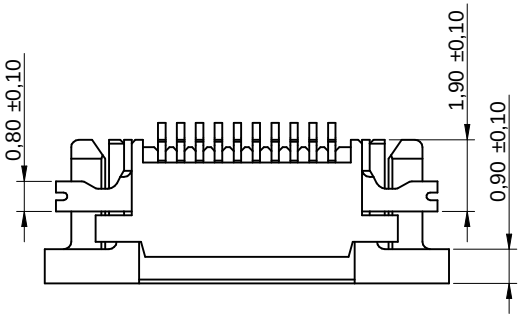

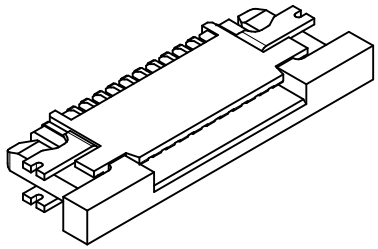

Recommended Land Pattern: [mm]

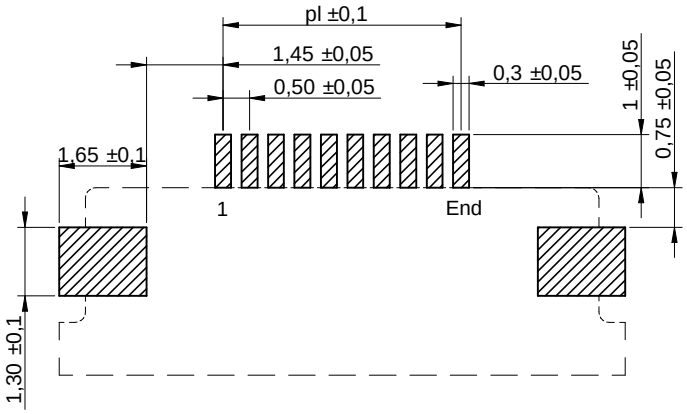

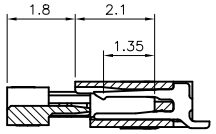

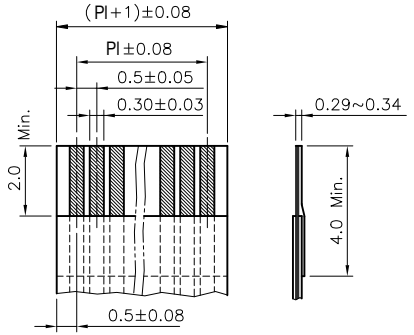

Recommended FFC

Pattern Properties:

Properties		Value	Unit
Pin to Pin (Middle)	p_l	10.5	mm

Article Properties:

Properties		Value	Unit
Pins		22	
Pin to Pin (Middle)	P_l	10.5	mm
Length	L	16.7	mm
Length	L_1	11.6	mm

Würth Elektronik eiSos GmbH & Co. KG
EMC & Inductive Solutions

Max-Eyth-Str. 1
74638 Waldenburg
Germany
Tel. +49 (0) 79 42 945 - 0

www.we-online.com
eiSos@we-online.com

WÜRTH ELEKTRONIK

CREATED	CHECKED	GENERAL TOLERANCE	PROJECTION METHOD
ATo	GMo	DIN ISO 2768-1m	

DESCRIPTION
0.50mm SMT ZIF Horizontal Low Profile Top Contact WR-FPC

ORDER CODE
687122183622

REVISION	STATUS	DATE (YYYY-MM-DD)	BUSINESS UNIT	PAGE
001.004	Valid	2017-11-08	eiCan	1/5

This electronic component has been designed and developed for usage in general electronic equipment only. This product is not authorized for use in equipment where a higher safety standard and reliability standard is especially required or where a failure of the product is reasonably expected to cause severe personal injury or death, unless the parties have executed an agreement specifically governing such use. Moreover Würth Elektronik eiSos GmbH & Co KG products are neither designed nor intended for use in areas such as military, aerospace, aviation, nuclear control, submarine, transportation (automotive control, train control, ship control), transportation signal, disaster prevention, medical, public information network etc.. Würth Elektronik eiSos GmbH & Co KG must be informed about the intent of such usage before the design-in stage. In addition, sufficient reliability evaluation checks for safety must be performed on every electronic component which is used in electrical circuits that require high safety and reliability functions or performance.

Article Properties:

Pins	P_1	L	L_1	Order Code
6	2.5 mm	8.7 mm	3.6 mm	687106183622
8	3.5 mm	9.7 mm	4.6 mm	687108183622
10	4.5 mm	10.7 mm	5.6 mm	687110183622
12	5.5 mm	11.7 mm	6.6 mm	687112183622
14	6.5 mm	12.7 mm	7.6 mm	687114183622
16	7.5 mm	13.7 mm	8.6 mm	687116183622
18	8.5 mm	14.7 mm	9.6 mm	687118183622
20	9.5 mm	15.7 mm	10.6 mm	687120183622
22	10.5 mm	16.7 mm	11.6 mm	687122183622
24	11.5 mm	17.7 mm	12.6 mm	687124183622
26	12.5 mm	18.7 mm	13.6 mm	687126183622
28	13.5 mm	19.7 mm	14.6 mm	687128183622
30	14.5 mm	20.7 mm	15.6 mm	687130183622
32	15.5 mm	21.7 mm	16.6 mm	687132183622
33	16.0 mm	22.2 mm	17.1 mm	687133183622
34	16.5 mm	22.7 mm	17.6 mm	687134183622
40	19.5 mm	25.7 mm	20.6 mm	687140183622

Kind Properties:

Properties		Value	Unit
Standard Polarities		06;08;10;12;14;16;18;20;22;24;26;28;30;32;33;34;40	
Pitch	P	0.5	mm
Quality Class		20 Mating cycles	

Material Properties:

Insulator Material	LCP
Insulator Flammability Rating	UL94-V0
Insulator Color	Ivory
Actuator Material	PA 6T
Actuator Flammability Rating	UL94-V0
Actuator Color	Black
Contact Material	Phosphor Bronze
Contact Plating	120 (µ") Tin over 30 (µ") Nickel
Contact Type	Stamped
Solder Tabs	Brass

General Information:

Operating Temperature	-25 °C up to +85 °C
Compliance	RoHS

Electrical Properties:

Properties	Test conditions		Value	Unit	Tol.
Rated Current		I_R	0.4	A	
Working Voltage			50	V (AC)	
Withstanding Voltage	1 min		250	V (AC)	
Contact Resistance		R	30	mΩ	max.
Insulation Resistance		R_{ISO}	100	MΩ	min.

Standard:

UL Approval	E323964

Packaging Properties:

Properties		Value
Packaging		Tape and Reel
Packaging Unit (Qty.)	Qty.	4000

Specific Recommendation:

In order to handle products correctly, please download our precaution guide which is available under "Downloads" on our Homepage: http://katalog.we-online.de/em/download/PRECAUTION_GUIDE-FPC_0_5_SMT_ZIF_HORIZONTAL_TOP_CONTACT_LOW_PROFILE_6871xx183622-rev1.pdf

Würth Elektronik eiSos GmbH & Co. KG
EMC & Inductive Solutions

Max-Eyth-Str. 1
74638 Waldenburg
Germany
Tel. +49 (0) 79 42 945 - 0

www.we-online.com
eiSos@we-online.com

WÜRTH ELEKTRONIK

CREATED	CHECKED	GENERAL TOLERANCE	PROJECTION METHOD
ATo	GMo	DIN ISO 2768-1m	

DESCRIPTION
0.50mm SMT ZIF Horizontal Low Profile Top Contact WR-FPC

ORDER CODE
687122183622

REVISION	STATUS	DATE (YYYY-MM-DD)	BUSINESS UNIT	PAGE
001.004	Valid	2017-11-08	eiCan	2/5

This electronic component has been designed and developed for usage in general electronic equipment only. This product is not authorized for use in equipment where a higher safety standard and reliability standard is especially required or where a failure of the product is reasonably expected to cause severe personal injury or death, unless the parties have executed an agreement specifically governing such use. Moreover Würth Elektronik eiSos GmbH & Co KG products are neither designed nor intended for use in areas such as military, aerospace, aviation, nuclear control, submarine, transportation (automotive control, train control, ship control), transportation signal, disaster prevention, medical, public information network etc.. Würth Elektronik eiSos GmbH & Co KG must be informed about the intent of such usage before the design-in stage. In addition, sufficient reliability evaluation checks for safety must be performed on every electronic component which is used in electrical circuits that require high safety and reliability functions or performance.

Classification Reflow Profile for SMT components:

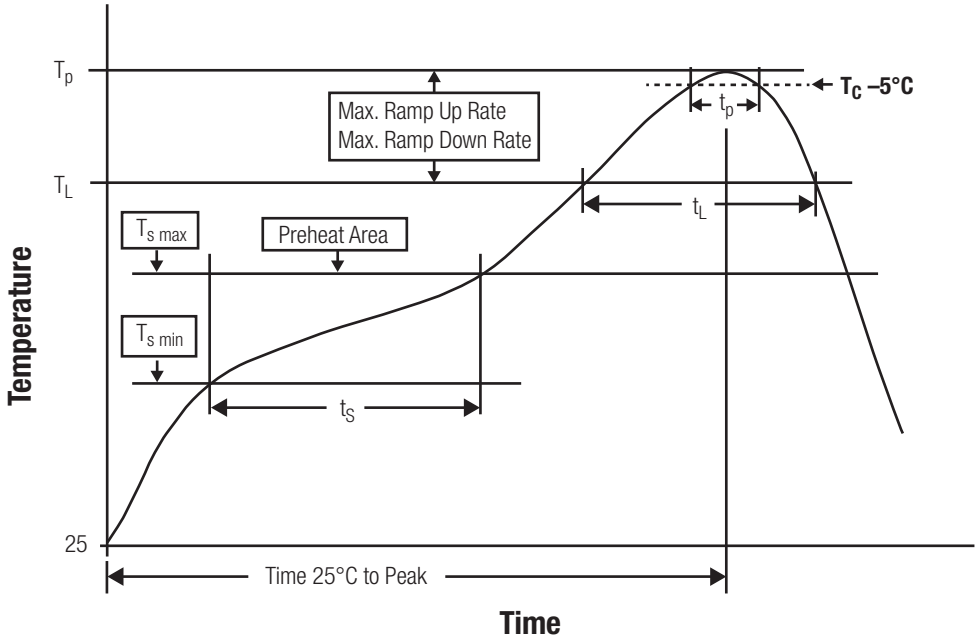

Classification Reflow Soldering Profile:

Profile Feature		Value
Preheat Temperature Min [1)]	$T_{s\ min}$	150 °C
Preheat Temperature Max	$T_{s\ max}$	200 °C
Preheat Time t_s from $T_{s\ min}$ to $T_{s\ max}$	t_s	60 - 120 seconds
Ramp-up Rate (T_L to T_P)		3 °C/ second max.
Liquidous Temperature	T_L	217 °C
Time t_L maintained above T_L	t_L	60 - 150 seconds
Peak package body temperature	T_p	see table
Time within 5°C of actual peak temperaure	t_p	20 - 30 seconds
Ramp-down Rate (T_L to T_P)		6 °C/ second max.
Time 25°C to peak temperature		8 minutes max.

1) refer to IPC/JEDEC J-STD-020D
refer to IPC/ JEDEC J-STD-020E

Package Classification Reflow Temperature:

Properties	Volume mm³ <350	Volume mm³ 350-2000	Volume mm³ >2000
PB-Free Assembly I Package Thickness < 1.6 mm [1)]	260 °C	260 °C	260 °C
PB-Free Assembly I Package Thickness 1.6 mm - 2.5 mm	260 °C	250 °C	245 °C
PB-Free Assembly I Package Thickness ≥ 2.5 mm	250 °C	245 °C	245 °C

1) refer to IPC/JEDEC J-STD-020D
refer to IPC/ JEDEC J-STD-020E

Würth Elektronik eiSos GmbH & Co. KG
EMC & Inductive Solutions

Max-Eyth-Str. 1
74638 Waldenburg
Germany
Tel. +49 (0) 79 42 945 - 0

www.we-online.com
eiSos@we-online.com

WÜRTH ELEKTRONIK

CREATED	CHECKED	GENERAL TOLERANCE	PROJECTION METHOD
ATo	GMo	DIN ISO 2768-1m	

DESCRIPTION
0.50mm SMT ZIF Horizontal Low Profile Top Contact WR-FPC

ORDER CODE
687122183622

REVISION	STATUS	DATE (YYYY-MM-DD)	BUSINESS UNIT	PAGE
001.004	Valid	2017-11-08	eiCan	3/5

This electronic component has been designed and developed for usage in general electronic equipment only. This product is not authorized for use in equipment where a higher safety standard and reliability standard is especially required or where a failure of the product is reasonably expected to cause severe personal injury or death, unless the parties have executed an agreement specifically governing such use. Moreover Würth Elektronik eiSos GmbH & Co KG products are neither designed nor intended for use in areas such as military, aerospace, aviation, nuclear control, submarine, transportation (automotive control, train control, ship control), transportation signal, disaster prevention, medical, public information network etc.. Würth Elektronik eiSos GmbH & Co KG must be informed about the intent of such usage before the design-in stage. In addition, sufficient reliability evaluation checks for safety must be performed on every electronic component which is used in electrical circuits that require high safety and reliability functions or performance.

Cautions and Warnings:

The following conditions apply to all goods within the product services of the Connectors of Würth Elektronik eiSos GmbH & Co. KG:

General:

- This electronic component is designed and developed with the intention for use in general electronics equipment.
- Before incorporating the components into any equipment in the field such as aerospace, aviation, nuclear control, submarine, transportation, (automotive control, train control, ship control), transportation signal, disaster prevention, medical, public information network etc. where higher safety and reliability are especially required or if there is possibility of direct damage or injury to human body, Wurth Elektronik must be asked for a written approval.
- In addition, even electronic component in general electronic equipment, when used in electrical circuits that require high safety, reliability functions or performance, the sufficient reliability evaluation-check for the safety must be performed by the user before usage.
- The connector is designed and manufactured to be used within the datasheet specified values.
- Do not use the connector outside the datasheet specifications.
- Prevent any damage or scratches on the connector, especially on the actuator.
- Direct mechanical impact to the product shall be prevented (e.g overlapping of the PCB´s).
- The responsibility for the applicability of the customer specific products and use in a particular customer design is always within the authority of the customer. All technical specification for standard products do also apply to customer specific products.
- The Connectors are designed to be used along with Würth Elektronik counterparts and tools. Würth Elektronik cannot insure the reliability of these components while being used with other products.

Product Specific:

Soldering:

- The solder profile must comply with the WE technical soldering specification, otherwise this will void the warranty.
- Other soldering methods are not verified and have to be validated by the customer at his own risk.

Cleaning and Washing:

- Parts are not constructed for washing, so washing can cause malfunction afterwards.
- Cleaning agent that are used to clean the customer applications might damage or change the characteristics of the component, body, pins and termination.
- Please do not submerse our washable products into water or cleaning agents or put them in locations exposed to water completely.
- When cleaning by hand (brushing), please do not use excessive force on our connectors to avoid malfunction afterwards, because customer could deform function relevant areas.
- We recommended a solution without organic acid (preserve the plating against corrosion) volatile, without residues and compatible with the plastic.
- We recommend to perform tests and to let a part in immersion in the solution 8 to 12 hours and see if there is a degradation.

Storage Conditions:

- The Connectors are considered MSL1 into closed original packaging and are not subject to storage time limits regarding the moisture sensivity but all products shall be used before the end of the period of 12 months based on the products date code, if not 100% solderability can't be warranted.

Handling:

- Do not repeatedly operate the connector with excessive force. It may damage or deforms the contact dome which results in malfunction.
- In the case a product requires particular handling precautions, in addition to the general recommendations mentioned here before, these will appear on the product datasheet.

Würth Elektronik eiSos GmbH & Co. KG
EMC & Inductive Solutions

Max-Eyth-Str. 1
74638 Waldenburg
Germany
Tel. +49 (0) 79 42 945 - 0

www.we-online.com
eiSos@we-online.com

WÜRTH ELEKTRONIK

CREATED	CHECKED	GENERAL TOLERANCE	PROJECTION METHOD
ATo	GMo	DIN ISO 2768-1m	

DESCRIPTION
0.50mm SMT ZIF Horizontal Low Profile Top Contact WR-FPC

ORDER CODE
687122183622

REVISION	STATUS	DATE (YYYY-MM-DD)	BUSINESS UNIT	PAGE
001.004	Valid	2017-11-08	eiCan	4/5

This electronic component has been designed and developed for usage in general electronic equipment only. This product is not authorized for use in equipment where a higher safety standard and reliability standard is especially required or where a failure of the product is reasonably expected to cause severe personal injury or death, unless the parties have executed an agreement specifically governing such use. Moreover Würth Elektronik eiSos GmbH & Co KG products are neither designed nor intended for use in areas such as military, aerospace, aviation, nuclear control, submarine, transportation (automotive control, train control, ship control), transportation signal, disaster prevention, medical, public information network etc.. Würth Elektronik eiSos GmbH & Co KG must be informed about the intent of such usage before the design-in stage. In addition, sufficient reliability evaluation checks for safety must be performed on every electronic component which is used in electrical circuits that require high safety and reliability functions or performance.

Important Notes

The following conditions apply to all goods within the product range of Würth Elektronik eiSos GmbH & Co. KG:

1. General Customer Responsibility

Some goods within the product range of Würth Elektronik eiSos GmbH & Co. KG contain statements regarding general suitability for certain application areas. These statements about suitability are based on our knowledge and experience of typical requirements concerning the areas, serve as general guidance and cannot be estimated as binding statements about the suitability for a customer application. The responsibility for the applicability and use in a particular customer design is always solely within the authority of the customer. Due to this fact it is up to the customer to evaluate, where appropriate to investigate and decide whether the device with the specific product characteristics described in the product specification is valid and suitable for the respective customer application or not.

2. Customer Responsibility related to Specific, in particular Safety-Relevant Applications

It has to be clearly pointed out that the possibility of a malfunction of electronic components or failure before the end of the usual lifetime cannot be completely eliminated in the current state of the art, even if the products are operated within the range of the specifications.
In certain customer applications requiring a very high level of safety and especially in customer applications in which the malfunction or failure of an electronic component could endanger human life or health it must be ensured by most advanced technological aid of suitable design of the customer application that no injury or damage is caused to third parties in the event of malfunction or failure of an electronic component. Therefore, customer is cautioned to verify that data sheets are current before placing orders. The current data sheets can be downloaded at www.we-online.com.

3. Best Care and Attention

Any product-specific notes, cautions and warnings must be strictly observed. Any disregard will result in the loss of warranty.

4. Customer Support for Product Specifications

Some products within the product range may contain substances which are subject to restrictions in certain jurisdictions in order to serve specific technical requirements. Necessary information is available on request. In this case the field sales engineer or the internal sales person in charge should be contacted who will be happy to support in this matter.

5. Product R&D

Due to constant product improvement product specifications may change from time to time. As a standard reporting procedure of the Product Change Notification (PCN) according to the JEDEC-Standard inform about minor and major changes. In case of further queries regarding the PCN, the field sales engineer or the internal sales person in charge should be contacted. The basic responsibility of the customer as per Section 1 and 2 remains unaffected.

6. Product Life Cycle

Due to technical progress and economical evaluation we also reserve the right to discontinue production and delivery of products. As a standard reporting procedure of the Product Termination Notification (PTN) according to the JEDEC-Standard we will inform at an early stage about inevitable product discontinuance. According to this we cannot guarantee that all products within our product range will always be available. Therefore it needs to be verified with the field sales engineer or the internal sales person in charge about the current product availability expectancy before or when the product for application design-in disposal is considered. The approach named above does not apply in the case of individual agreements deviating from the foregoing for customer-specific products.

7. Property Rights

All the rights for contractual products produced by Würth Elektronik eiSos GmbH & Co. KG on the basis of ideas, development contracts as well as models or templates that are subject to copyright, patent or commercial protection supplied to the customer will remain with Würth Elektronik eiSos GmbH & Co. KG. Würth Elektronik eiSos GmbH & Co. KG does not warrant or represent that any license, either expressed or implied, is granted under any patent right, copyright, mask work right, or other intellectual property right relating to any combination, application, or process in which Würth Elektronik eiSos GmbH & Co. KG components or services are used.

8. General Terms and Conditions

Unless otherwise agreed in individual contracts, all orders are subject to the current version of the “General Terms and Conditions of Würth Elektronik eiSos Group”, last version available at www.we-online.com.

Würth Elektronik eiSos GmbH & Co. KG
EMC & Inductive Solutions

Max-Eyth-Str. 1
74638 Waldenburg
Germany
Tel. +49 (0) 79 42 945 - 0

www.we-online.com
eiSos@we-online.com

WÜRTH ELEKTRONIK

CREATED	CHECKED	GENERAL TOLERANCE	PROJECTION METHOD
ATo	GMo	DIN ISO 2768-1m	

DESCRIPTION
0.50mm SMT ZIF Horizontal Low Profile Top Contact WR-FPC

ORDER CODE
687122183622

REVISION	STATUS	DATE (YYYY-MM-DD)	BUSINESS UNIT	PAGE
001.004	Valid	2017-11-08	eiCan	5/5

This electronic component has been designed and developed for usage in general electronic equipment only. This product is not authorized for use in equipment where a higher safety standard and reliability standard is especially required or where a failure of the product is reasonably expected to cause severe personal injury or death, unless the parties have executed an agreement specifically governing such use. Moreover Würth Elektronik eiSos GmbH & Co KG products are neither designed nor intended for use in areas such as military, aerospace, aviation, nuclear control, submarine, transportation (automotive control, train control, ship control), transportation signal, disaster prevention, medical, public information network etc.. Würth Elektronik eiSos GmbH & Co KG must be informed about the intent of such usage before the design-in stage. In addition, sufficient reliability evaluation checks for safety must be performed on every electronic component which is used in electrical circuits that require high safety and reliability functions or performance.

Unikeyic Electronics

Global Electronic Components Distributor

Click to view pricing, inventory, delivery, and lifecycle information:

WURTH:

140816144200 714726110106 830003237 865230657014 74408942330 7443633300 64900221122 687750225002 744052002 74438334022 784773147 865080457015 830032817 620307124022 636201040300 687640141002 71206415 782963560 560112110188 744393665015 78438335033HT 971100477 64900821122 74437529203220 860080275016 560112110239 686124183822 665102131822 810912012 810913006