Freescale Semiconductor

MPX5050
Rev 11, 03/2010

Integrated Silicon Pressure Sensor On-Chip Signal Conditioned, Temperature Compensated and Calibrated

MPX5050
MPXV5050
MPVZ5050
Series
0 to 50 kPa (0 to 7.25 psi)
0.2 to 4.7 V Output

The MPXx5050 series piezoresistive transducer is a state-of-the-art monolithic silicon pressure sensor designed for a wide range of applications, but particularly those employing a microcontroller or microprocessor with A/D inputs. This patented, single element transducer combines advanced micromachining techniques, thin-film metallization, and bipolar processing to provide an accurate, high level analog output signal that is proportional to the applied pressure.

Features

- 2.5% Maximum Error over 0° to 85°C
- Ideally suited for Microprocessor or Microcontroller-Based Systems
- Temperature Compensated Over -40° to +125°C
- Patented Silicon Shear Stress Strain Gauge
- Durable Epoxy Unibody Element
- Easy-to-Use Chip Carrier Option

ORDERING INFORMATION								
Device Name	Case No.	# of Ports			Pressure Type			Device Marking
		None	Single	Dual	Gauge	Differential	Absolute	
Unibody Package (MPX5050 Series)								
MPX5050D	867	•				•		MPX5050D
MPX5050DP	867C			•		•		MPX5050DP
MPX5050GP	867B		•		•			MPX5050GP
MPX5050GP1	867B		•		•			MPX5050GP
Small Outline Package (MPXV5050 Series)								
MPXV5050GP	1369		•		•			MPXV5050GP
MPXV5050DP	1351			•		•		MPXV5050DP
MPXV5050GC6U	482A		•		•			MPXV5050G
MPXV5050GC6T1	482A		•		•			MPXV5050G
Small Outline Package (Media Resistant Gel) (MPVZ5050 Series)								
MPVZ5050GW7U	1560		•		•			MZ5050GW

© Freescale Semiconductor, Inc., 2007-2010. All rights reserved.

freescale™ semiconductor

UNIBODY PACKAGES

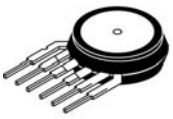

MPX5050D
CASE 867-08



MPX5050GP
CASE 867B-04

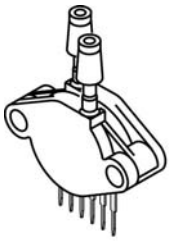

MPX5050DP
CASE 857C-05

SMALL OUTLINE PACKAGES



MPVZ5050GW7U
CASE 1560-03



MPXV5100GC6U
CASE 482A-01

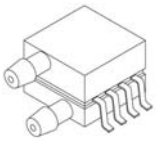

MPXV5050DP
CASE 1351-01

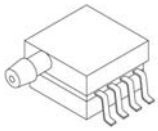

MPXV5050GP
CASE 1369-01

Operating Characteristics

Table 1. Operating Characteristics (V_S = 5.0 Vdc, T_A = 25°C unless otherwise noted, P1 > P2. Decoupling circuit shown in Figure 4 required to meet electrical specifications.)

Characteristic		Symbol	Min	Typ	Max	Unit
Pressure Range[1]		P_{OP}	0	—	50	kPa
Supply Voltage[2]		V_S	4.75	5.0	5.25	Vdc
Supply Current		I_o	—	7.0	10	mAdc
Minimum Pressure Offset[3] @ V_S = 5.0 Volts	(0 to 85°C)	V_{off}	0.088	0.2	0.313	Vdc
Full Scale Output[4] @ V_S = 5.0 Volts	(0 to 85°C)	V_{FSO}	4.587	4.7	4.813	Vdc
Full Scale Span[5] @ V_S = 5.0 Volts	(0 to 85°C)	V_{FSS}	—	4.5	—	Vdc
Accuracy[6]	(0 to 85°C)	—	—	—	±2.5	$\%V_{FSS}$
Sensitivity		V/P	—	90	—	mV/kPa
Response Time[7]		t_R	—	1.0	—	ms
Output Source Current at Full Scale Output		I_{o+}	—	0.1	—	mAdc
Warm-Up Time[8]		—	—	20	—	ms
Offset Stability[9]		—	—	±0.5	—	$\%V_{FSS}$

1. 1.0 kPa (kiloPascal) equals 0.145 psi.
2. Device is ratiometric within this specified excitation range.
3. Offset (V_{off}) is defined as the output voltage at the minimum rated pressure.
4. Full Scale Output (V_{FSO}) is defined as the output voltage at the maximum or full rated pressure.
5. Full Scale Span (V_{FSS}) is defined as the algebraic difference between the output voltage at full rated pressure and the output voltage at the minimum rated pressure.
6. Accuracy (error budget) consists of the following:

   Linearity: Output deviation from a straight line relationship with pressure over the specified pressure range.

   Temperature Hysteresis: Output deviation at any temperature within the operating temperature range, after the temperature is cycled to and from the minimum or maximum operating temperature points, with zero differential pressure applied.

   Pressure Hysteresis: Output deviation at any pressure within the specified range, when this pressure is cycled to and from the minimum or maximum rated pressure at 25°C.

   TcSpan: Output deviation over the temperature range of 0° to 85°C, relative to 25°C.

   TcOffset: Output deviation with minimum pressure applied, over the temperature range of 0° to 85°C, relative to 25°C.

   Variation from Nominal: The variation from nominal values, for Offset or Full Scale Span, as a percent of V_{FSS} at 25°C.
7. Response Time is defined as the time for the incremental change in the output to go from 10% to 90% of its final value when subjected to a specified step change in pressure.
8. Warm-up Time is defined as the time required for the product to meet the specified output voltage after the Pressure has been stabilized.
9. Offset Stability is the product's output deviation when subjected to 1000 hours of Pulsed Pressure, Temperature Cycling with Bias Test.

Maximum Ratings

Table 2. Maximum Ratings(1)

Rating	Symbol	Value	Unit
Maximum Pressure (P1 > P2)	P_{max}	200	kPa
Storage Temperature	T_{stg}	-40° to +125°	°C
Operating Temperature	T_A	-40° to +125°	°C

1. Exposure beyond the specified limits may cause permanent damage or degradation to the device.

Figure 1 shows a block diagram of the internal circuitry integrated on a pressure sensor chip.

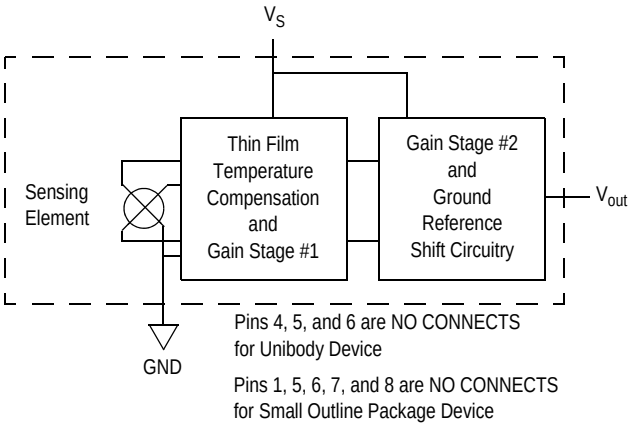

Figure 1. Fully Integrated Pressure Sensor Schematic

On-chip Temperature Compensation and Calibration

Figure 3 illustrates the Differential/Gauge Sensing Chip in the basic chip carrier (Case 867). A fluorosilicone gel isolates the die surface and wire bonds from the environment, while allowing the pressure signal to be transmitted to the sensor diaphragm.

The MPX5050/MPXV5050G series pressure sensor operating characteristics, and internal reliability and qualification tests are based on use of dry air as the pressure media. Media, other than dry air, may have adverse effects on sensor performance and long-term reliability. Contact the factory for information regarding media compatibility in your application.

Figure 2 shows the sensor output signal relative to pressure input. Typical, minimum, and maximum output curves are shown for operation over a temperature range of 0° to 85°C using the decoupling circuit shown in Figure 4. The output will saturate outside of the specified pressure range.

Figure 4 shows the recommended decoupling circuit for interfacing the output of the integrated sensor to the A/D input of a microprocessor or microcontroller. Proper decoupling of the power supply is recommended.

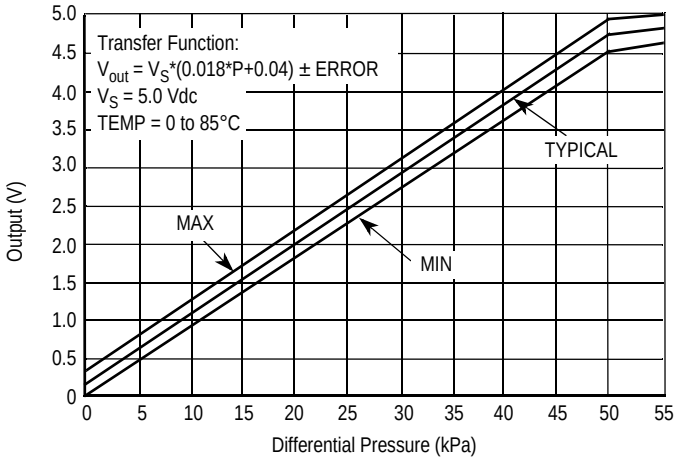

Figure 2. Output vs. Pressure Differential

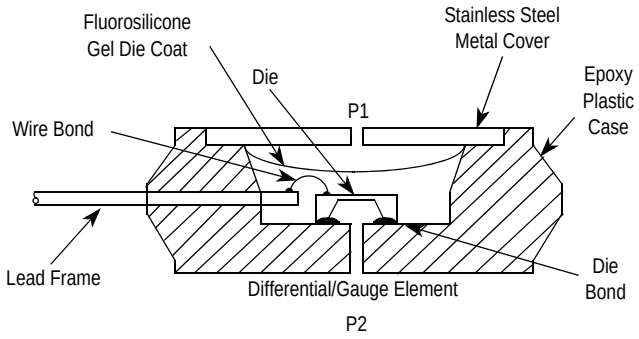

Figure 3. Cross-Sectional Diagram (not to scale)

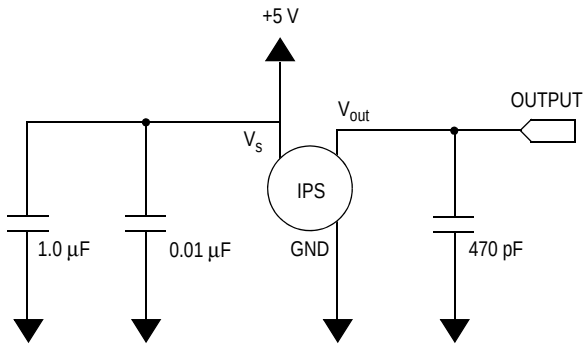

Figure 4. Recommended Power Supply Decoupling and Output Filtering
(For additional output filtering, please refer to Application Note AN1646)

Transfer Function

Nominal Transfer Value: $V_{out} = V_S (P \times 0.018 + 0.04)$
$\pm$ (Pressure Error x Temp. Factor x 0.018 x V_S)
$V_S = 5.0\ V \pm 0.25$ Vdc

Temperature Error Band

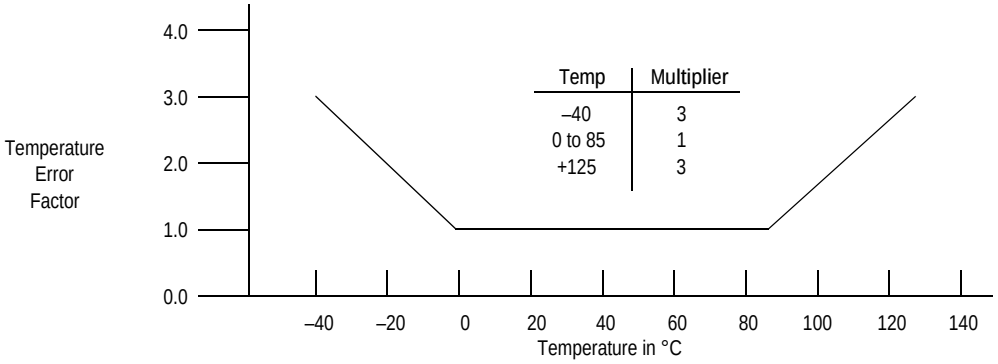

NOTE: The Temperature Multiplier is a linear response from 0° to –40°C and from 85° to 125°C.

Pressure Error Band

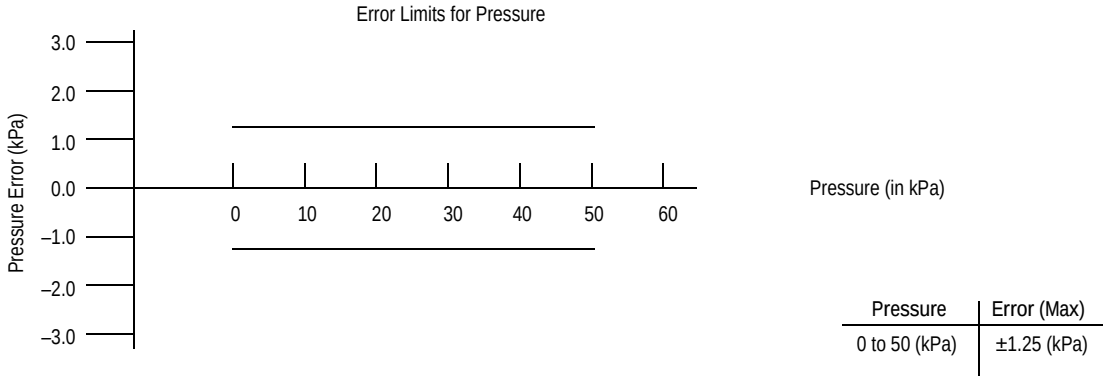

PRESSURE (P1)/VACUUM (P2) SIDE IDENTIFICATION TABLE

Freescale designates the two sides of the pressure sensor as the Pressure (P1) side and the Vacuum (P2) side. The Pressure (P1) side is the side containing fluorosilicone gel which protects the die from harsh media. The MPX pressure sensor is designed to operate with positive differential pressure applied, P1 > P2.

The Pressure (P1) side may be identified by using the table below:

Part Number	Case Type	Pressure (P1) Side Identifier
MPX5050D	867	Stainless Steel Cap
MPX5050DP	867C	Side with Part Marking
MPX5050GP	867B	Side with Port Attached
MPXV5050GP	1369	Side with Port Attached
MPXV5050DP	1351	Side with Part Marking
MPXV5050GC6U/T1	482A	Vertical Port Attached

PACKAGE DIMENSIONS

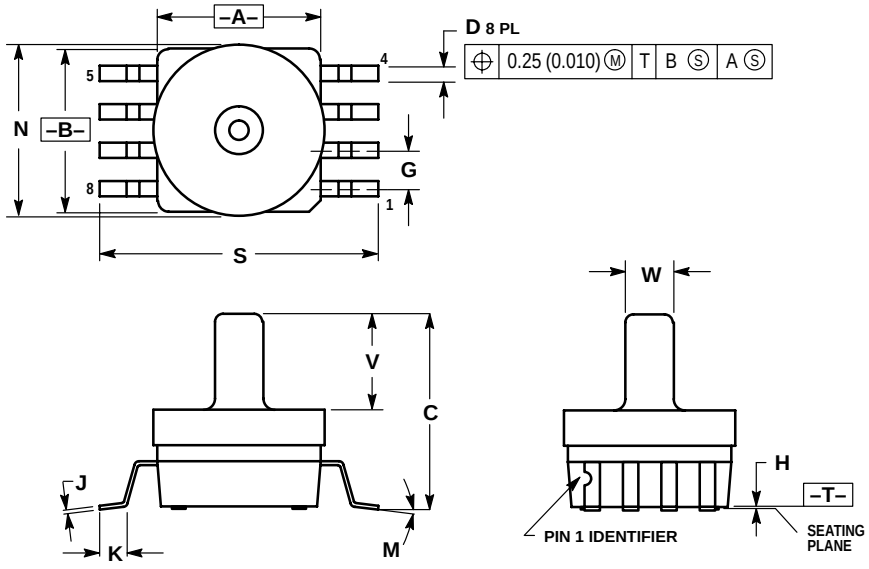

NOTES:
1. DIMENSIONING AND TOLERANCING PER ANSI Y14.5M, 1982.
2. CONTROLLING DIMENSION: INCH.
3. DIMENSION A AND B DO NOT INCLUDE MOLD PROTRUSION.
4. MAXIMUM MOLD PROTRUSION 0.15 (0.006).
5. ALL VERTICAL SURFACES 5° TYPICAL DRAFT.

	INCHES		MILLIMETERS	
DIM	MIN	MAX	MIN	MAX
A	0.415	0.425	10.54	10.79
B	0.415	0.425	10.54	10.79
C	0.500	0.520	12.70	13.21
D	0.038	0.042	0.96	1.07
G	0.100 BSC		2.54 BSC	
H	0.002	0.010	0.05	0.25
J	0.009	0.011	0.23	0.28
K	0.061	0.071	1.55	1.80
M	0 °	7 °	0 °	7 °
N	0.444	0.448	11.28	11.38
S	0.709	0.725	18.01	18.41
V	0.245	0.255	6.22	6.48
W	0.115	0.125	2.92	3.17

CASE 482A-01
ISSUE A
UNIBODY PACKAGE

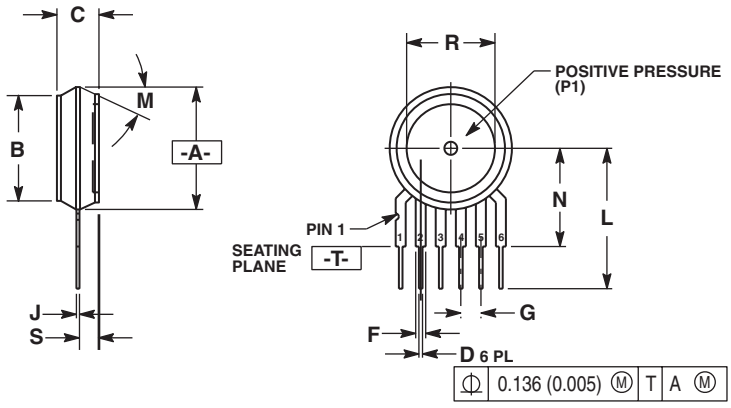

NOTES:
1. DIMENSIONING AND TOLERANCING PER ANSI Y14.5M, 1982.
2. CONTROLLING DIMENSION: INCH.
3. DIMENSION -A- IS INCLUSIVE OF THE MOLD STOP RING. MOLD STOP RING NOT TO EXCEED 16.00 (0.630).

	INCHES		MILLIMETERS	
DIM	MIN	MAX	MIN	MAX
A	0.595	0.630	15.11	16.00
B	0.514	0.534	13.06	13.56
C	0.200	0.220	5.08	5.59
D	0.027	0.033	0.68	0.84
F	0.048	0.064	1.22	1.63
G	0.100 BSC		2.54 BSC	
J	0.014	0.016	0.36	0.40
L	0.695	0.725	17.65	18.42
M	30˚ NOM		30˚ NOM	
N	0.475	0.495	12.07	12.57
R	0.430	0.450	10.92	11.43
S	0.090	0.105	2.29	2.66

STYLE 1:
PIN 1. VOUT
2. GROUND
3. VCC
4. V1
5. V2
6. VEX

STYLE 2:
PIN 1. OPEN
2. GROUND
3. -VOUT
4. VSUPPLY
5. +VOUT
6. OPEN

STYLE 3:
PIN 1. OPEN
2. GROUND
3. +VOUT
4. +VSUPPLY
5. -VOUT
6. OPEN

CASE 867-08
ISSUE N
UNIBODY PACKAGE

PACKAGE DIMENSIONS

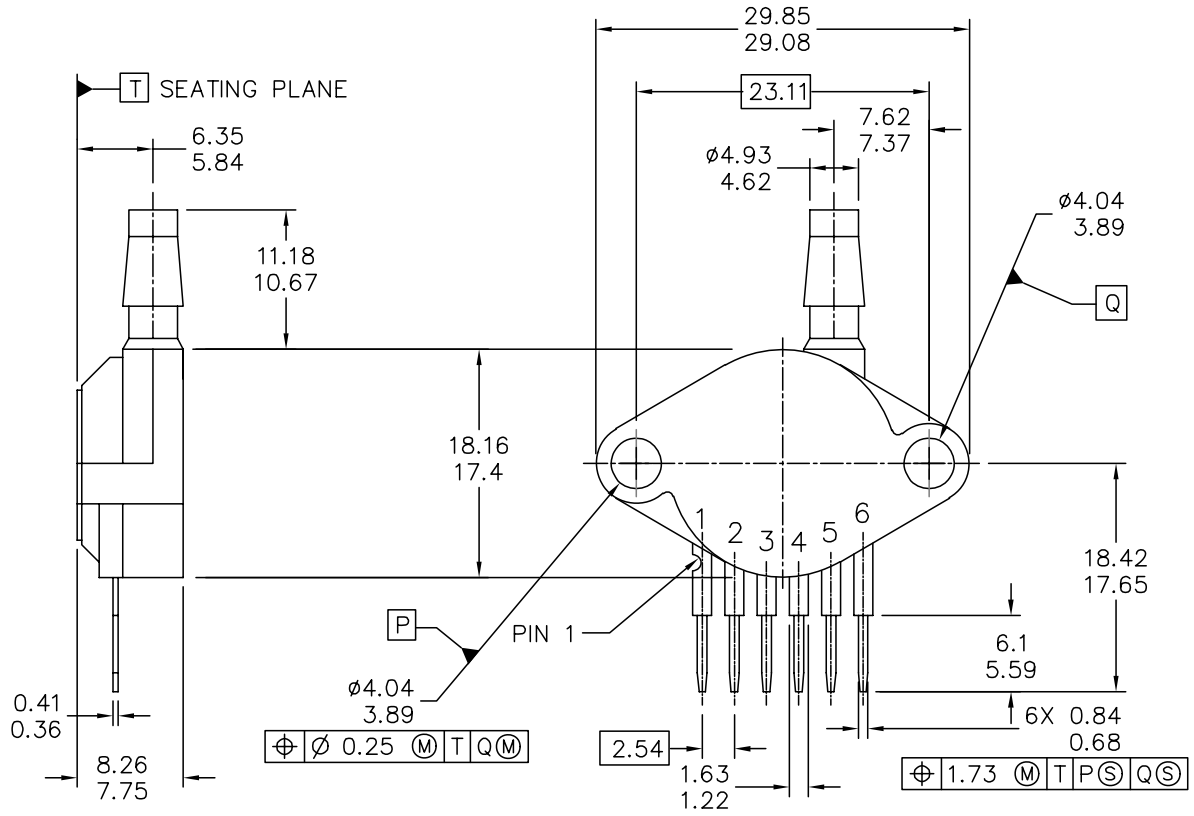

© FREESCALE SEMICONDUCTOR, INC. ALL RIGHTS RESERVED.	MECHANICAL OUTLINE	PRINT VERSION NOT TO SCALE
TITLE: SENSOR, 6 LEAD UNIBODY CELL, AP & GP 01ASB09087B	DOCUMENT NO: 98ASB42796B	REV: G
	CASE NUMBER: 867B-04	28 JUL 2005
	STANDARD: NON-JEDEC	

CASE 867B-04
ISSUE G
UNIBODY PACKAGE

PACKAGE DIMENSIONS

NOTES:

1. DIMENSIONS ARE IN MILLIMETERS.
2. DIMENSIONS AND TOLERANCES PER ASME Y14.5M–1994.
3. 867B–01 THRU –3 OBSOLETE, NEW STANDARD 867B–04.

STYLE 1:

PIN 1: V OUT
2: GROUND
3: VCC
4: V1
5: V2
6: V EX

© FREESCALE SEMICONDUCTOR, INC. ALL RIGHTS RESERVED.	**MECHANICAL OUTLINE**	PRINT VERSION NOT TO SCALE
TITLE: SENSOR, 6 LEAD UNIBODY CELL, AP & GP 01ASB09087B	DOCUMENT NO: 98ASB42796B	REV: G
	CASE NUMBER: 867B–04	28 JUL 2005
	STANDARD: NON–JEDEC	

CASE 867B-04
ISSUE G
UNIBODY PACKAGE

PACKAGE DIMENSIONS

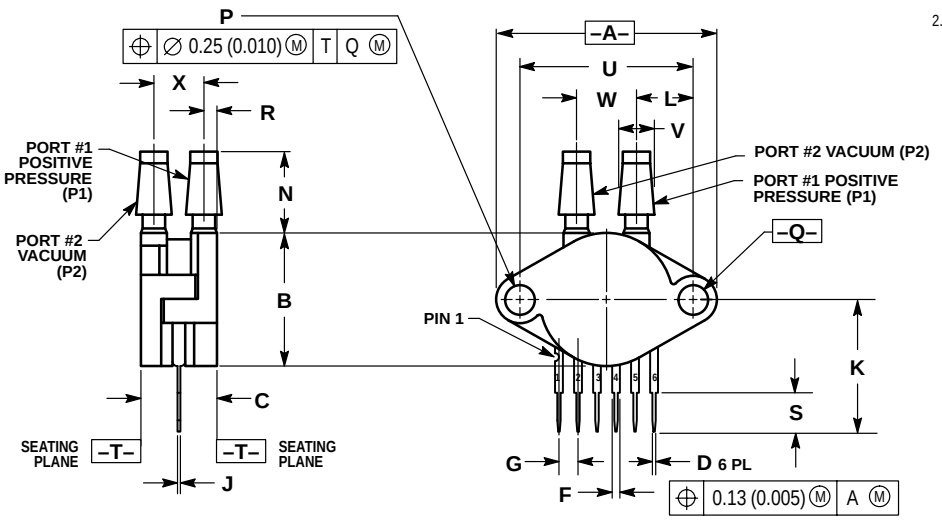

NOTES:
1. DIMENSIONING AND TOLERANCING PER ANSI Y14.5M, 1982.
2. CONTROLLING DIMENSION: INCH.

	INCHES		MILLIMETERS	
DIM	MIN	MAX	MIN	MAX
A	1.145	1.175	29.08	29.85
B	0.685	0.715	17.40	18.16
C	0.405	0.435	10.29	11.05
D	0.027	0.033	0.68	0.84
F	0.048	0.064	1.22	1.63
G	0.100 BSC		2.54 BSC	
J	0.014	0.016	0.36	0.41
K	0.695	0.725	17.65	18.42
L	0.290	0.300	7.37	7.62
N	0.420	0.440	10.67	11.18
P	0.153	0.159	3.89	4.04
Q	0.153	0.159	3.89	4.04
R	0.063	0.083	1.60	2.11
S	0.220	0.240	5.59	6.10
U	0.910 BSC		23.11 BSC	
V	0.182	0.194	4.62	4.93
W	0.310	0.330	7.87	8.38
X	0.248	0.278	6.30	7.06

STYLE 1:
PIN 1. V_{OUT}
2. GROUND
3. V_{CC}
4. V1
5. V2
6. V_{EX}

CASE 867C-05
ISSUE F
UNIBODY PACKAGE

PACKAGE DIMENSIONS

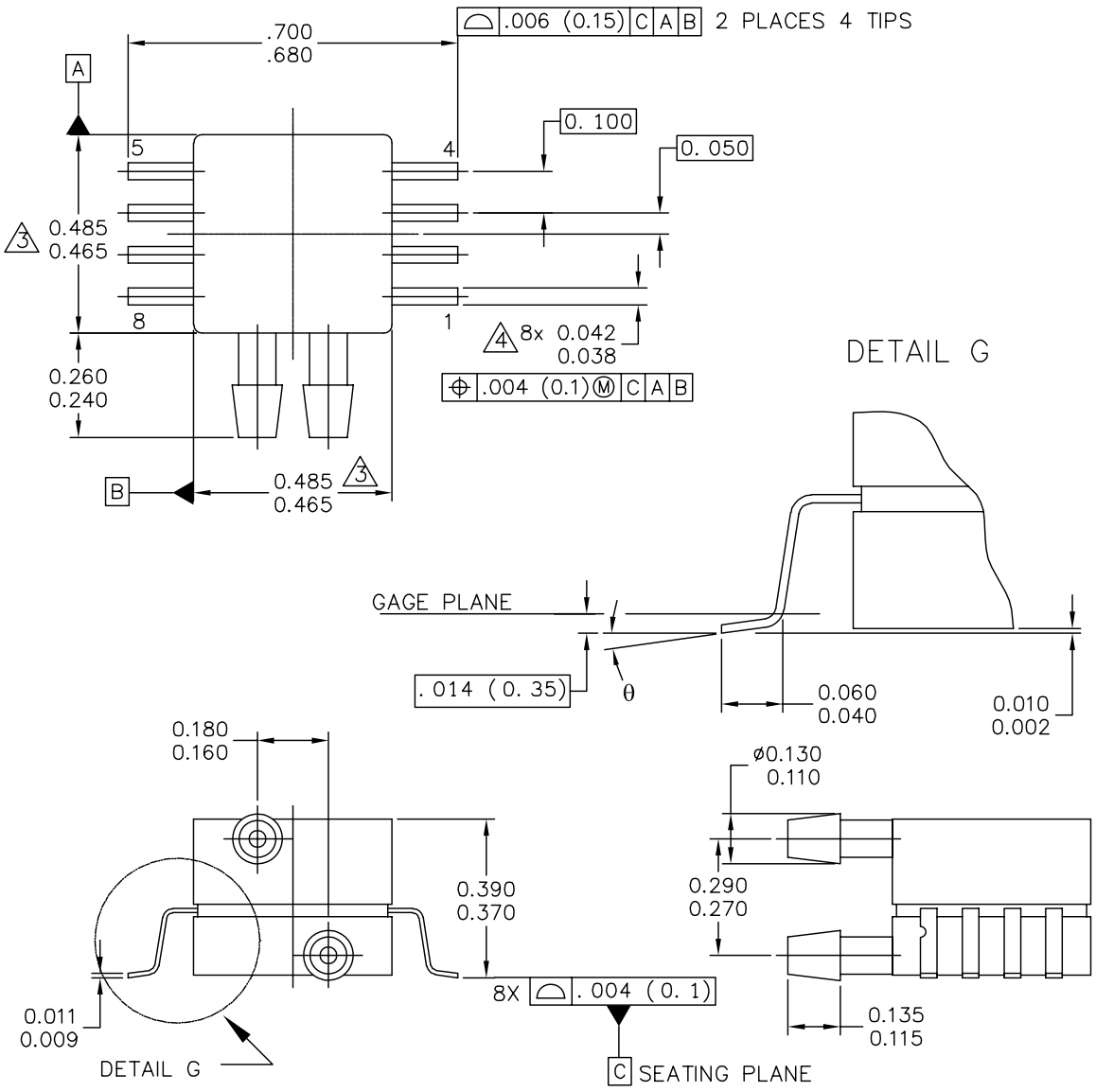

© FREESCALE SEMICONDUCTOR, INC. ALL RIGHTS RESERVED.	MECHANICAL OUTLINE	PRINT VERSION NOT TO SCALE
TITLE: 8 LD SNSR, DUAL PORT	DOCUMENT NO: 98ASA99255D	REV: A
	CASE NUMBER: 1351-01	27 JUL 2005
	STANDARD: NON-JEDEC	

CASE 1351-01
ISSUE A
SMALL OUTLINE PACKAGE

PACKAGE DIMENSIONS

NOTES:

1. CONTROLLING DIMENSION: INCH

2. INTERPRET DIMENSIONS AND TOLERANCES PER ASME Y14.5M–1994.

3. DIMENSIONS DO NOT INCLUDE MOLD FLASH OR PPROTRUSIONS.
MOLD FLASH AND PROTRUSIONS SHALL NOT EXCEED .006 PER SIDE.

4. DIMENSION DOES NOT INCLUDE DAMBAR PROTRUSION. ALLOWABLE DAMBAR
PROTRUSION SHALL BE .008 MAXIMUM.

STYLE 1:	STYLE 2:
PIN 1: GND	PIN 1: N/C
PIN 2: +Vout	PIN 2: Vs
PIN 3: Vs	PIN 3: GND
PIN 4: –Vout	PIN 4: Vout
PIN 5: N/C	PIN 5: N/C
PIN 6: N/C	PIN 6: N/C
PIN 7: N/C	PIN 7: N/C
PIN 8: N/C	PIN 8: N/C

© FREESCALE SEMICONDUCTOR, INC.
ALL RIGHTS RESERVED.

MECHANICAL OUTLINE	PRINT VERSION NOT TO SCALE

TITLE:	DOCUMENT NO: 98ASA99255D	REV: A
8 LD SNSR, DUAL PORT	CASE NUMBER: 1351–01	27 JUL 2005
	STANDARD: NON–JEDEC	

CASE 1351-01
ISSUE A
SMALL OUTLINE PACKAGE

PACKAGE DIMENSIONS

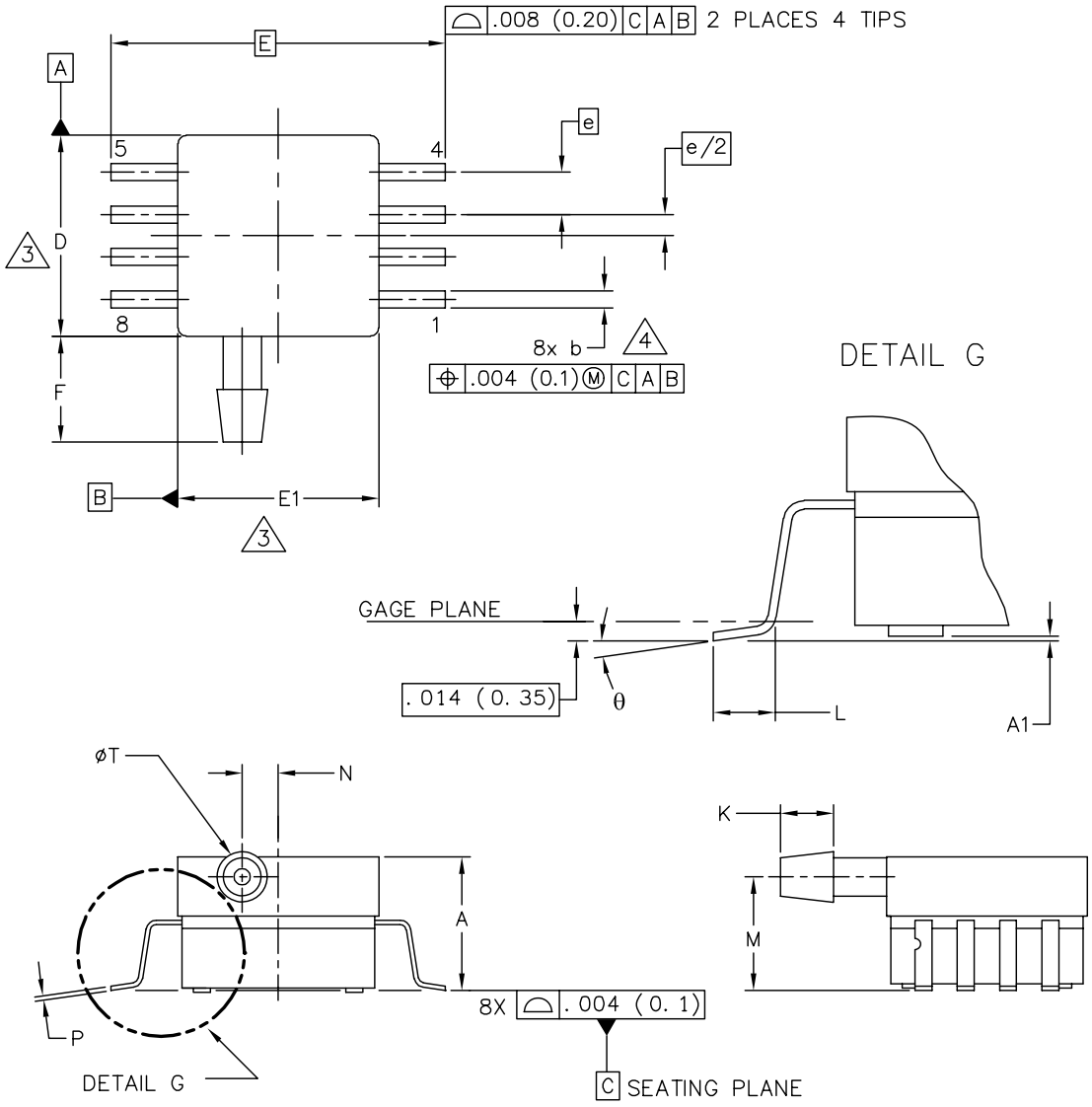

© FREESCALE SEMICONDUCTOR, INC. ALL RIGHTS RESERVED.	MECHANICAL OUTLINE	PRINT VERSION NOT TO SCALE
TITLE: 8 LD SOP, SIDE PORT	DOCUMENT NO: 98ASA99303D	REV: B
	CASE NUMBER: 1369-01	24 MAY 2005
	STANDARD: NON-JEDEC	

CASE 1369-01
ISSUE B
SMALL OUTLINE PACKAGE

PACKAGE DIMENSIONS

NOTES:
1. CONTROLLING DIMENSION: INCH

2. INTERPRET DIMENSIONS AND TOLERANCES PER ASME Y14.5M–1994.

3. DIMENSIONS DO NOT INCLUDE MOLD FLASH OR PPROTRUSIONS.
MOLD FLASH AND PROTRUSIONS SHALL NOT EXCEED .006 (0.152) PER SIDE.

4. DIMENSION DOES NOT INCLUDE DAMBAR PROTRUSION. ALLOWABLE DAMBAR
PROTRUSION SHALL BE .008 (0.203) MAXIMUM.

DIM	INCHES MIN	INCHES MAX	MILLIMETERS MIN	MILLIMETERS MAX	DIM	INCHES MIN	INCHES MAX	MILLIMETERS MIN	MILLIMETERS MAX
A	.300	.330	7.11	7.62	θ	0°	7°	0°	7°
A1	.002	.010	0.05	0.25	–	---	---	---	---
b	.038	.042	0.96	1.07	–	---	---	---	---
D	.465	.485	11.81	12.32	–	---	---	---	---
E	.717 BSC		18.21 BSC		–	---	---	---	---
E1	.465	.485	11.81	12.32	–	---	---	---	---
e	.100 BSC		2.54 BSC		–	---	---	---	---
F	.245	.255	6.22	6.47	–	---	---	---	---
K	.120	.130	3.05	3.30	–	---	---	---	---
L	.061	.071	1.55	1.80	–	---	---	---	---
M	.270	.290	6.86	7.36	–	---	---	---	---
N	.080	.090	2.03	2.28	–	---	---	---	---
P	.009	.011	0.23	0.28	–	---	---	---	---
T	.115	.125	2.92	3.17	–	---	---	---	---

© FREESCALE SEMICONDUCTOR, INC.
ALL RIGHTS RESERVED.

MECHANICAL OUTLINE | PRINT VERSION NOT TO SCALE

TITLE:	DOCUMENT NO: 98ASA99303D	REV: B
8 LD SOP, SIDE PORT	CASE NUMBER: 1369–01	24 MAY 2005
	STANDARD: NON–JEDEC	

CASE 1369-01
ISSUE B
SMALL OUTLINE PACKAGE

PACKAGE DIMENSIONS

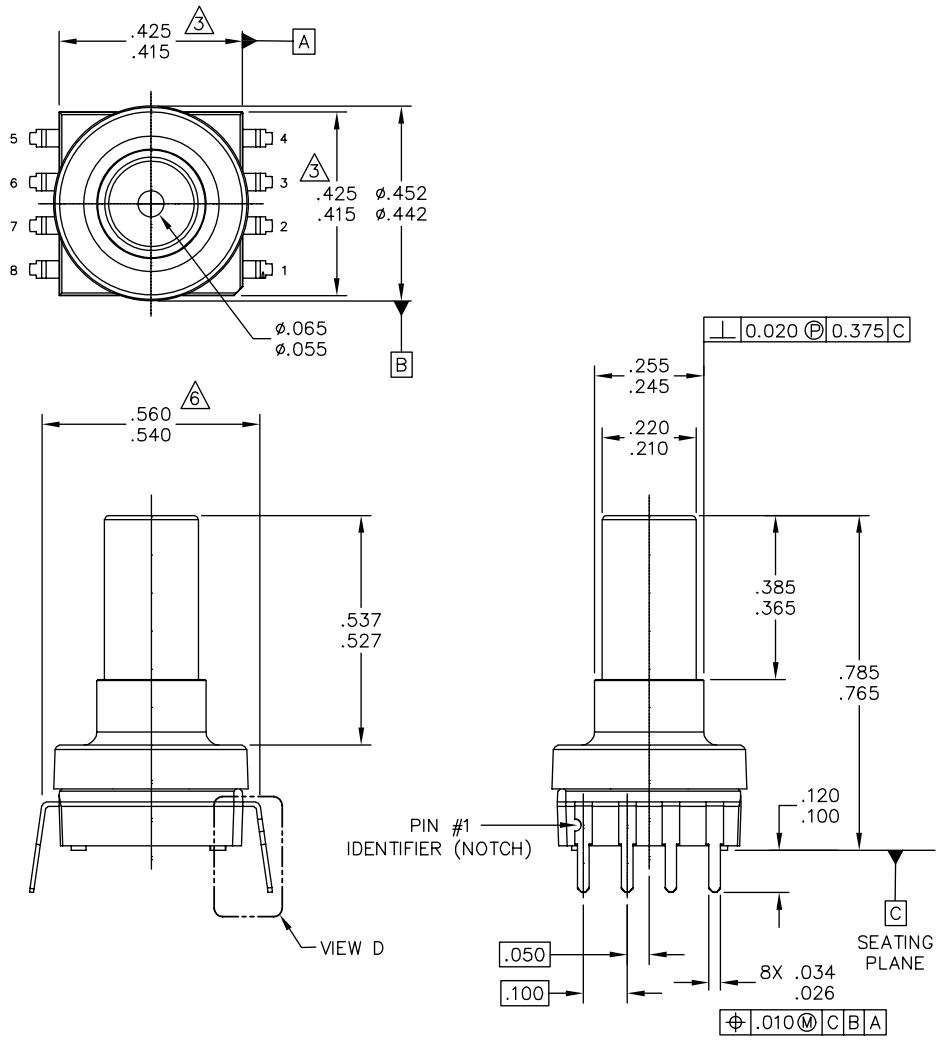

© FREESCALE SEMICONDUCTOR, INC. ALL RIGHTS RESERVED.	MECHANICAL OUTLINE	PRINT VERSION NOT TO SCALE
TITLE: SO, 8 I/O, .420 X .420 PKG, .100 IN PITCH	DOCUMENT NO: 98ASA10611D	REV: D
	CASE NUMBER: 1560–03	25 FEB 2009
	STANDARD: NON–JEDEC	

CASE 1560-03
ISSUE D
SMALL OUTLINE PACKAGE

PACKAGE DIMENSIONS

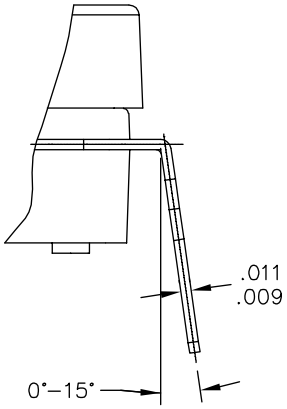

VIEW D

© FREESCALE SEMICONDUCTOR, INC. ALL RIGHTS RESERVED.	MECHANICAL OUTLINE	PRINT VERSION NOT TO SCALE
TITLE: SO, 8 I/O, .420 X .420 PKG, .100 IN PITCH	DOCUMENT NO: 98ASA10611D	REV: D
	CASE NUMBER: 1560–03	25 FEB 2009
	STANDARD: NON–JEDEC	

CASE 1560-03
ISSUE D
SMALL OUTLINE PACKAGE

PACKAGE DIMENSIONS

NOTES:

1. DIMENSIONING AND TOLERANCING PER ASME Y14.5M – 1994.
2. CONTROLLING DIMENSION: INCH.
3. DIMENSIONS DO NOT INCLUDE MOLD PROTRUSION.
4. MAXIMUM MOLD PROTRUSION IS .006.
5. ALL VERTICAL SURFACES 5° TYPICAL DRAFT.
6. DIMENSION TO CENTER OF LEAD WHEN FORMED PARALLEL.

© FREESCALE SEMICONDUCTOR, INC.
ALL RIGHTS RESERVED.

MECHANICAL OUTLINE	PRINT VERSION NOT TO SCALE	
TITLE: SO, 8 I/O, .420 X .420 PKG, .100 IN PITCH	DOCUMENT NO: 98ASA10611D	REV: D
	CASE NUMBER: 1560–03	25 FEB 2009
	STANDARD: NON–JEDEC	

CASE 1560-03
ISSUE D
SMALL OUTLINE PACKAGE

How to Reach Us:

Home Page:
www.freescale.com

Web Support:
http://www.freescale.com/support

USA/Europe or Locations Not Listed:
Freescale Semiconductor, Inc.
Technical Information Center, EL516
2100 East Elliot Road
Tempe, Arizona 85284
1-800-521-6274 or +1-480-768-2130
www.freescale.com/support

Europe, Middle East, and Africa:
Freescale Halbleiter Deutschland GmbH
Technical Information Center
Schatzbogen 7
81829 Muenchen, Germany
+44 1296 380 456 (English)
+46 8 52200080 (English)
+49 89 92103 559 (German)
+33 1 69 35 48 48 (French)
www.freescale.com/support

Japan:
Freescale Semiconductor Japan Ltd.
Headquarters
ARCO Tower 15F
1-8-1, Shimo-Meguro, Meguro-ku,
Tokyo 153-0064
Japan
0120 191014 or +81 3 5437 9125
support.japan@freescale.com

Asia/Pacific:
Freescale Semiconductor China Ltd.
Exchange Building 23F
No. 118 Jianguo Road
Chaoyang District
Beijing 100022
China
+86 10 5879 8000
support.asia@freescale.com

For Literature Requests Only:
Freescale Semiconductor Literature Distribution Center
1-800-441-2447 or +1-303-675-2140
Fax: +1-303-675-2150
LDCForFreescaleSemiconductor@hibbertgroup.com

Information in this document is provided solely to enable system and software implementers to use Freescale Semiconductor products. There are no express or implied copyright licenses granted hereunder to design or fabricate any integrated circuits or integrated circuits based on the information in this document.

Freescale Semiconductor reserves the right to make changes without further notice to any products herein. Freescale Semiconductor makes no warranty, representation or guarantee regarding the suitability of its products for any particular purpose, nor does Freescale Semiconductor assume any liability arising out of the application or use of any product or circuit, and specifically disclaims any and all liability, including without limitation consequential or incidental damages. “Typical” parameters that may be provided in Freescale Semiconductor data sheets and/or specifications can and do vary in different applications and actual performance may vary over time. All operating parameters, including “Typicals”, must be validated for each customer application by customer’s technical experts. Freescale Semiconductor does not convey any license under its patent rights nor the rights of others. Freescale Semiconductor products are not designed, intended, or authorized for use as components in systems intended for surgical implant into the body, or other applications intended to support or sustain life, or for any other application in which the failure of the Freescale Semiconductor product could create a situation where personal injury or death may occur. Should Buyer purchase or use Freescale Semiconductor products for any such unintended or unauthorized application, Buyer shall indemnify and hold Freescale Semiconductor and its officers, employees, subsidiaries, affiliates, and distributors harmless against all claims, costs, damages, and expenses, and reasonable attorney fees arising out of, directly or indirectly, any claim of personal injury or death associated with such unintended or unauthorized use, even if such claim alleges that Freescale Semiconductor was negligent regarding the design or manufacture of the part.

Freescale™ and the Freescale logo are trademarks of Freescale Semiconductor, Inc., Reg. U.S. Pat. & Tm. Off. All other product or service names are the property of their respective owners.

© Freescale Semiconductor, Inc. 2010. All rights reserved.

MPX5050
Rev. 11
03/2010

Unikeyic Electronics

Global Electronic Components Distributor

Click to view pricing, inventory, delivery, and lifecycle information:

NXP Semiconductors:

MC7447AVU1000NB PCA9517AD,118 LPC1111FHN33/202,5 LPC1114FBD48/301,1 LS1046AXN8T1A
MC33897CTEFR2 MK20DN512VLL10 MPVZ7025GP P5020NXN7TNB FRDM-MCXC041
MK60FN1M0VLQ12 MVF50NN151CMK40 KCU8280CVVUPEA MC33730EK MC33FS8430G0ES
PCA9554BS,118 LPC1317FBD48 MC9S08PT16AVLC MIMX8MM5CVTKZAA PCA9685PW,112
PN5120A0HN1/C2,151 BLF6G15L-250PBRN,1 MRF1K50HR5 LPC1347FBD48 MPF7100BMMA0ESR2
PCA9555D,112 MC9S12E128CPVE MKE02Z16VLC4 SC16IS762IPW,112 LPC2387FBD100K