1 Product Identification

GDNRA	252012	-	1R0	M	T	F	-	54R
①	②		③	④	⑤	⑥		⑦

① Product Alloy Series

② Dimensions（See two）

③ Inductance Value (1R0:1.0μH)

④ Inductance Tolerance (J:±5%;K:±10%; M:±20%; N:±30%)

⑤ Packaging Style (B: Bulk; T: Tape & Reel)

⑥ Lead Free

⑦ DCR

2 Appearance, Dimensions(mm)

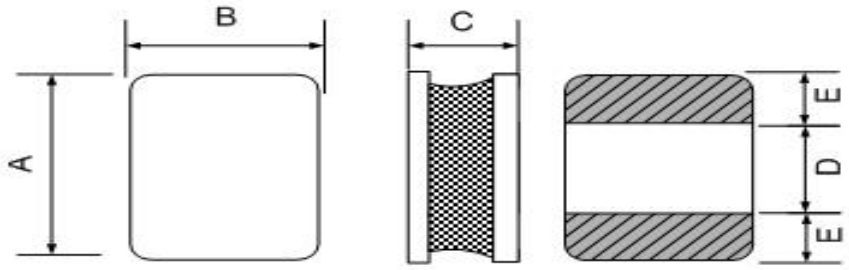

A	B	C	D	E
2.5±0.3	2.0±0.3	1.2max	0.9±0.2	0.8±0.2

LAND PATTERN DIMENSIONS

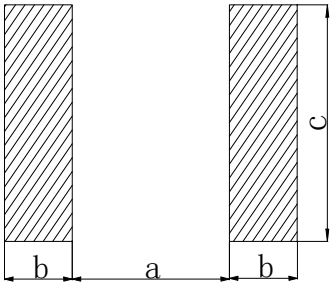

/	mm
a	0.80
b	0.85
c	2.00

3 Specifications

Part No.	Inductance L0(uH) ±20% @100KHz/1V	RDC (mΩ)		Saturation Current (A)		Heat Rating Current(A)	
		Max	Typ	Max	Typ	Max	Typ
GDNRA252012-1R0MTF-54R	1.0	54	48	3.70	4.20	3.60	4.15
GDNRA252012-1R5MTF	1.5	124	95	3.2	3.7	2.5	3.0
GDNRA252012-2R2MTF-100R	2.2	100	88	2.50	2.75	2.60	3.0
GDNRA252012-3R3MTF	3.3	182	140	1.7	2.1	1.8	2.05
GDNRA252012-4R7MTF	4.7	330	250	1.9	2.6	1.5	1.9
GDNRA252012-6R8MTF	6.8	494	380	1.4	1.8	1.1	1.4
GDNRA252012-100MTF	10.0	630	480	1.25	1.5	1.0	1.3

※ Note

*Rated current is the DC current that reduces the initial inductance by 30% or when the temperature rises △ T = 40℃

4 Packaging

(1) Dimensions of Reel（mm）

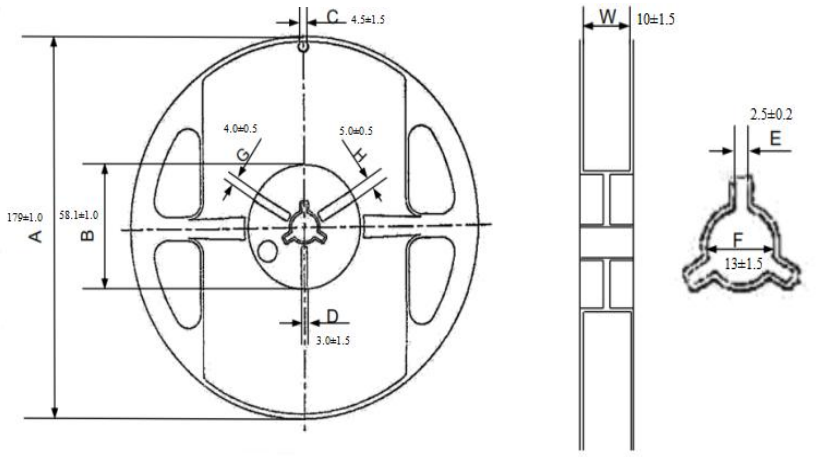

(2) Dimensions of Tape (mm):

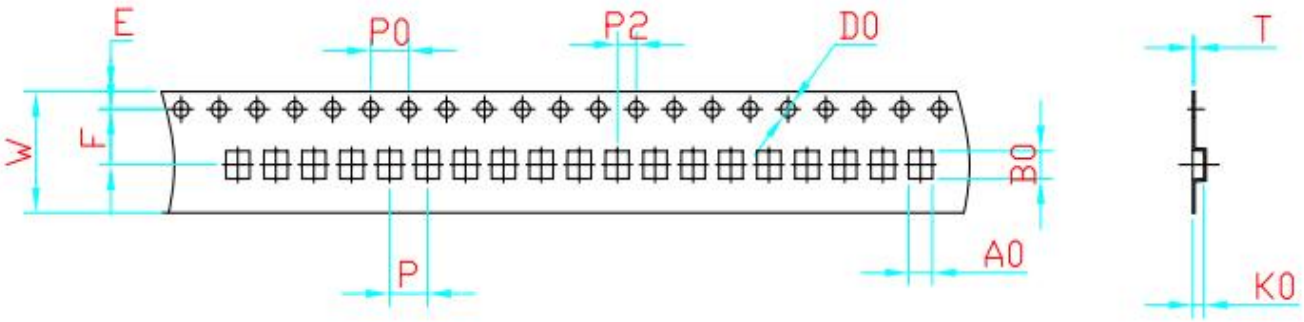

W	A0	B0	K0	P	F	E	D	P0	P2	T	Packaging quantity
8.0 ±0.3	2.4 ±0.1	2.85 ±0.1	1.4 ±0.1	4.0 ±0.1	3.5 ±0.1	1.75 ±0.1	1.55+ 0.1/-0.0	4.0 ±0.1	2.0 ±0.1	0.2 ±0.05	2000PCS/REEL